DODGE®

PT COMPONENTS ENGINEERING CATALOG

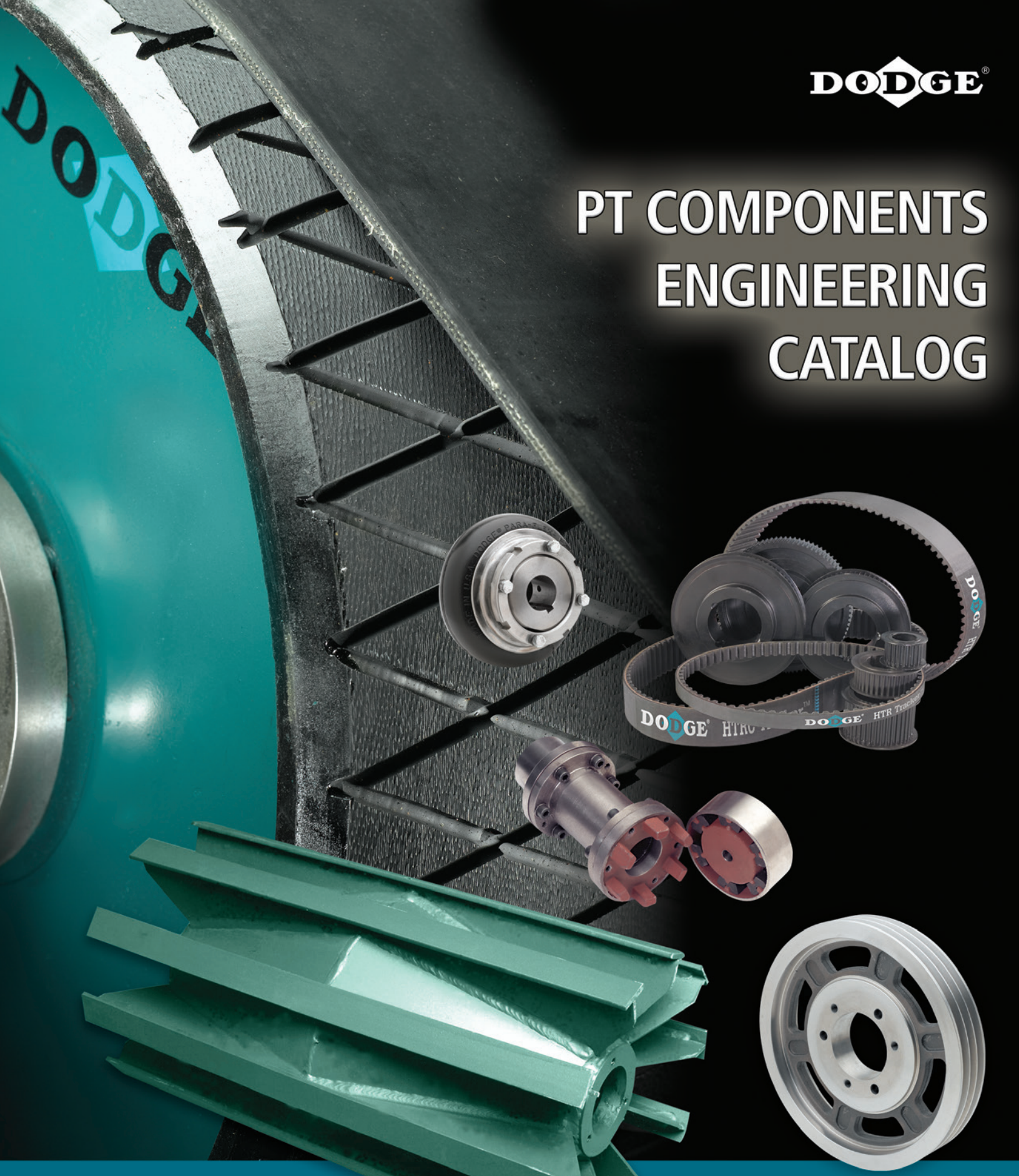

BALDOR®

A MEMBER OF THE ABB GROUP

CONTENTS

Bushings and Hubs

TAPER-LOCK® Bushings

Features/Benefits PT6-2
Nomenclature. PT6-2
Specification:
Dimensions PT6-3
Stock Bore. PT6-5
Reborable. PT6-11

Metric Bores. PT6-12
Related Products:
TAPER-LOCK Hubs. PT6-13
TAPER-LOCK Adapters. PT6-15

QD Bushings

Features/Benefits PT6-16
Specifications
Dimensions PT6-17
Stock Bore PT6-18
Metric Bore PT6-24
Related Products
QD Hubs PT6-26

GRIP TIGHT™ Bushings

Features/Benefits PT6-28
Specification:
Dimensions PT6-29

Part Index INDEX-1
Keyword Index INDEX-43

FEATURES/BENEFITS

TAPER-LOCK Bushings

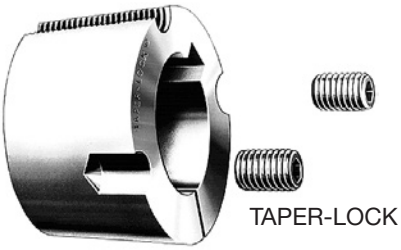

TAPER-LOCK Keyway-type Bushing

TAPER-LOCK Integral Key Bushing

- Clean, Compact Design
- An Industry Standard for over 40 years
- Easy-on, Easy-off
- 8° Taper-Grips Tight, Holds Tight, Runs True, No Wobble
- Total System Concept: Bushings, Hubs, Adapters and Products
- World-Wide Acceptance and Availability
- Flush Mounting-No Protruding Parts
- Diamond ® Integral Key for Added Value and Convenience

Simple Mounting

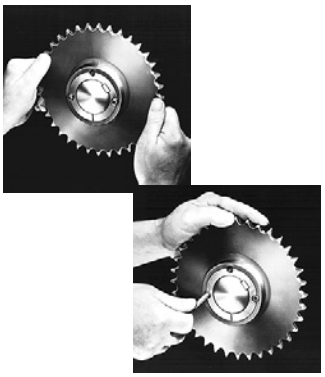

Easy On

- Insert bushing into sprocket
- Match holes (not threads).
- Put screws into holes that are farthest apart
- Slip entire unit onto shaft
- Set drive alignment and tighten screws

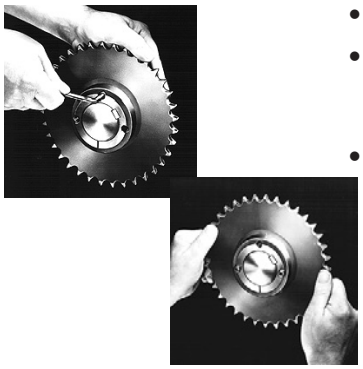

Easy Off

- Take both screws out entirely
- Insert one screw into hole that is threaded in the bushing only
- Use as jackscrew to disengage bushing

IMPORTANT!

Do not use lubricants or anti-seize compounds on tapered bore, bushing suitcase, shaft or screws. Complete installation instructions are available on www.dodge-pt.com.

DODGE TAPER-LOCK BUSHING WITH INTEGRAL KEY

- Popular bore sizes, 1008 thru 2517
- Capitalizes on proven DODGE sintered steel technology
- Convenience: No more fumbling with a separate key and setscrew over the key.
  Integral key cannot work loose or fall out.
- More Secure fit: Clearances between key and bushing are automatically eliminated, providing a more precise fit. Provides full key even in maximum bore sizes. . . No more “shallow keyseat” compromise.
- Cost Reduction: Eliminates labor cost associated with installing key and separate key, and associated inventory expense.
- Engineered and Tested Design: Integral key concept thoroughly analyzed, including computerized Finite Element Analysis (FEA), for stress evaluation. Extensive laboratory testing included static and dynamic loading on customized machinery. Results demonstrated in successful field applications.

Example Nomenclature

TAPER-LOCK Bushing

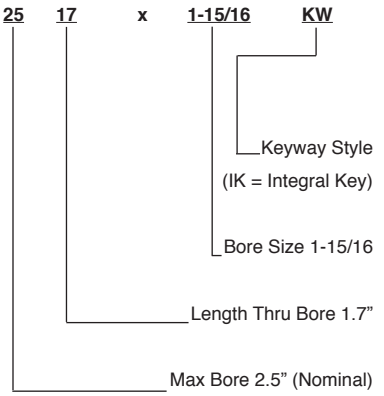

SPECIFICATION

TAPER-LOCK Bushings - Dimensions

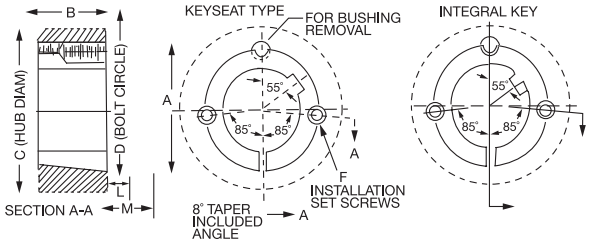

Dimensions For 1008 Thru 3030 TAPER-LOCK Bushings

Bush No.	Ratings (LB-IN) Torque Capacity ◆	Ratings (LB-IN) Wrench Torque Install Screws	A	B	C Hub Dia ■ CL 30	C Hub Dia ■ Steel	D	F † Qty	F † Size	L ● Std Hex Key	L ● Short Key ▲	M ★ Std. Hex Key	M ★ Short Key ▲
1008	1200	55	1.39	0.87	2.19	1.94	1.33	2	1/4 X 1/2	1.13	0.63	1.25	0.75
1108	1300	55	1.51	0.87	2.31	2.06	1.45	2	1/4 X 1/2	1.13	0.63	1.25	0.75
1210	3600	175	1.87	1.00	3.25	2.88	1.75	2	3/8 X 5/8	1.38	0.81	1.63	1.10
1215	3550	175	1.87	1.50	2.88	2.63	1.75	2	3/8 X 5/8	1.38	0.81	1.63	1.10
1310	3850	175	2.00	1.00	3.38	3.00	1.88	2	3/8 X 5/8	1.38	0.81	1.63	1.10
1610	4300	175	2.25	1.00	3.63	3.25	2.13	2	3/8 X 5/8	1.38	0.81	1.63	1.10
1615	4300	175	2.25	1.50	3.25	3.00	2.13	2	3/8 X 5/8	1.38	0.81	1.63	1.10
2012	7150	280	2.75	1.25	4.38	3.88	2.63	2	7/16 X 7/8	1.56	0.94	2.00	1.38
2517	11600	430	3.38	1.75	4.88	4.38	3.25	2	1/2 X 1	1.63	1.00	2.25	1.63
2525	11300	430	3.38	2.50	4.50	4.25	3.25	2	1/2 X 1	1.63	1.00	2.25	1.63
3020	24000	800	4.25	2.00	6.25	5.63	4.00	2	5/8 X 1-1/4	1.81	1.19	2.69	2.10
3030	24000	800	4.25	3.00	5.75	5.38	4.00	2	5/8 X 1-1/4	1.81	1.19	2.69	2.10

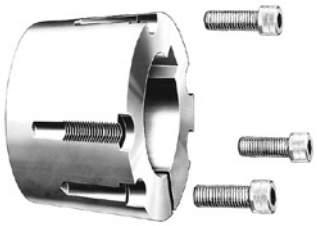

3535 thru 5050 Size

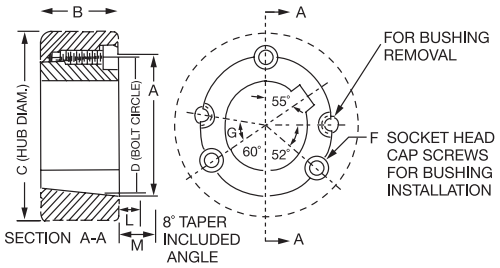

Dimensions For 3525 Thru 5050 TAPER-LOCK Bushings

Bush No.	Ratings (LB-IN) Torque Capacity ◆	Ratings (LB-IN) Wrench Torque Install Screws	A	B	C Hub Dia ■ CL 30	C Hub Dia ■ Steel	D	F † Qty	F † Size	G	L ● Std Hex Key	L ● Short Key ▲	M ★ Std. Hex Key	M ★ Short Key ▲
3525	44800	1000	5.00	2.50	7.00	6.50	4.83	3	1/2 X 1-1/2	39	2.00	1.31	3.38	2.69
3535	44800	1000	5.00	3.50	7.00	6.50	4.83	3	1/2 X 1-1/2	39	2.00	1.31	3.38	2.69
4030	77300	1700	5.75	3.00	8.50	7.75	5.54	3	5/8 X 1-3/4	39	2.39	1.63	4.13	3.38
4040	77300	1700	5.75	4.00	8.50	7.75	5.54	3	5/8 X 1-3/4	40	2.39	1.63	4.13	3.38
4535	110000	2450	6.38	3.50	9.50	8.75	6.13	3	3/4 X 2	40	2.63	1.94	4.75	4.10
4545	110000	2450	6.38	4.50	9.50	8.75	6.13	3	3/4 X 2	40	2.63	1.94	4.75	4.10
5040	126000	3100	7.00	4.00	10.50	9.50	6.72	3	7/8 X 2-1/4	37	2.81	2.31	5.25	4.81
5050	126000	3100	7.00	5.00	10.50	9.50	6.72	3	7/8 X 2-1/4	37	2.81	2.31	5.25	4.81

Note: For dimensions required for machining hubs, consult factory.

■ Hub diameter required depends on the application. When other Hub diameter shown is based on 30,000 P.S.I. minimum ultimate tensile strength.

◆ Important: refer to service factor information on page PT6-4.

● Space required to tighten bushing. Also space required to loosen screws to permit removal of hub by puller.

★ Space required to remove bushing using jackscrews-no puller required

▲ Standard hex key cut to minimum usable length.

† Use in position shown in drawing above for tightening bushing on shaft. loosening bushing remove screws and use all except one in the holes.

Note: Installation and maintenance instructions for Dodge products available at www.dodge-pt.com

T-L FEATURES/BENEFITS PAGE PT6-2	T-L SPECIFICATION PAGE PT6-3	QD BUSHINGS PAGE PT6-16	GT BUSHINGS PAGE PT6-28

SPECIFICATION

TAPER-LOCK Bushings - Dimensions

6050 thru 120100 Sizes

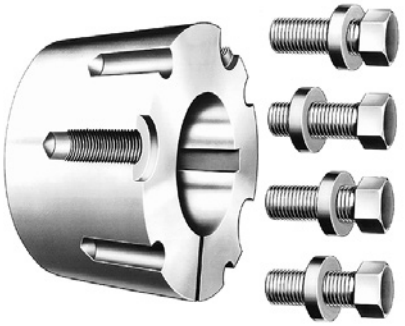

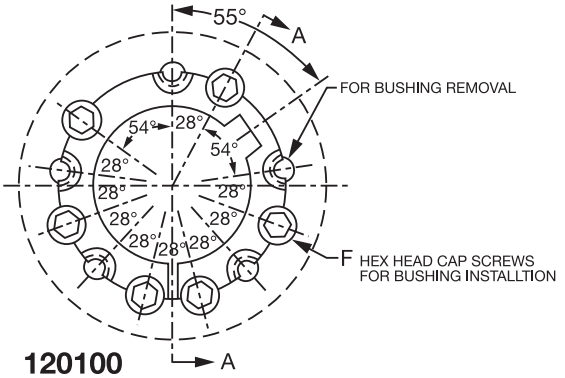

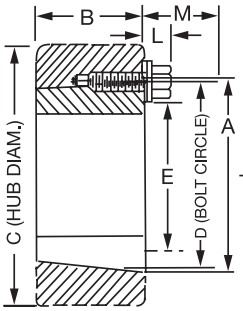

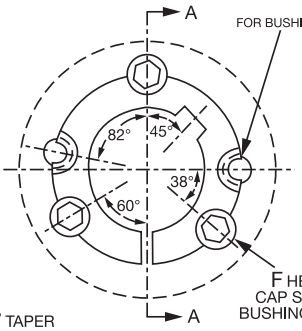

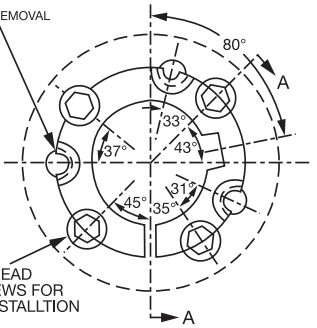

Dimensions For 6050 Thru 120100 TAPER-LOCK Bushings

Bush No.	Ratings (LB-IN) Torque Capacity ◆	Ratings (LB-IN) Wrench Torque Install Screws	A	B	C Hub Dia CL 30	C Hub Dia Steel	D	E	F Qty	F Size	L	M
6050	282000	7820	9.25	5.00	15.50	13.50	9.00	6.75	3	1-1/4 X 3-1/2	1.63	4.38
7060	416000	7820	10.25	6.00	17.00	14.80	10.00	7.75	4	1-1/4 X 3-1/2	1.63	4.38
8065	456000	7820	11.25	6.50	17.50	15.50	11.00	8.75	4	1-1/4 X 3-1/2	1.63	4.38
10085	869000	13700	14.75	8.50	22.00	19.50	14.50	11.75	4	1-1/2 X 4-1/4	2.00	5.38
120100	1520000	13700	17.25	10.00	26.00	23.00	17.00	14.25	6	1-1/2 X 4-1/4	2.00	5.38

Note: For dimensions required for machining hubs, consult factory.

■ Hub diameter required depends on the application. Hub diameter shown is based on 30,000 P.S.I. minimum ultimate tensile strength.

† Use in position shown in drawing above for tightening bushing on shaft. When loosening bushing remove screws and use all except one in the other holes.

● Space required to tighten bushing. Also space required to loosen screws to permit removal of hub by puller.

★ Space required to loosen bushing using screws as jackscrews - no puller required.

◆ Peak torque loads must not exceed torque capacity rating shown. Capacity values shown are for light starting and steady running conditions. For more severe duty, divide torque capacity by service factor suggested in following table.

Service Factor	Type of Loading
1.00	Light Starting & Steady Running
1.50	Light Starting & Uneven Running
2.00	Fairly Heavy Starting & Steady Or Uneven Running
2.50	Light or Heavy Starting & Moderate Shock Running
3.00	Light or Heavy Starting & Severe Shock Running, or Reversing Loads

SPECIFICATION

TAPER-LOCK Bushings - Stock Bore

TL Bush Size	Bore	P/N Integral Key	P/N Keyway	WT.	Bushing Keyway	Shaft Keyway REF	Key Size REF
1008	1/2"		**119176**	0.3	1/8 x 1/16	1/8 x 1/16	1/8 x 1/8
	9/16"		**119177**	0.3			
	5/8"		**117073**	0.3	3/16 x 3/32	3/16 x 3/32	3/16 x 3/16
	11/16"		**119179**	0.2			
	3/4"	**119180**	**117150**	0.2			
	13/16"		**119181**	0.2			
	7/8"	**119182**	**117074**	0.2			
	15/16" #		**119183**	0.2	1/4 x 1/16	1/4 x 1/8	1/4 x 3/16 Δ
	1" #	**119184**	**117151**	0.2			
	14MM		**119565**	0.3	5 x 2.3MM	5 x 5.3MM	5 x 5MM
	16MM		**119566**	0.3			
	18MM		**119575**	0.3	6 x 2.8MM	6 x 3.5MM	6 x 6MM
	19MM		**119569**	0.3			
	20MM		**119576**	0.3			
	22MM		**119577**	0.2			
	24MM		**119567**	0.2	8 x 1.3MM	8 x 4MM	8 X 7MM
	25MM		**119568**	0.2			
1108	1/2"		**119365**	0.3	1/8 x 1/4	1/8 x 1/4	1/8 x 1/8
	9/16"		**119366**	0.3			
	5/8"	**119367**	**117075**	0.3	3/16 x 3/32	3/16 x 3/32	3/16 x 3/16
	11/16"		**119368**	0.2			
	3/4"		**117152**	0.2			
	13/16"		**119370**	0.2			
	7/8"	**119371**	**117076**	0.2			
	15/16"		**119372**	0.2	1/4 x 1/8	1/4 x 1/8	1/4 x 1/4
	1"		**117153**	0.2			
	1-1/16" #		**119374**	0.2	1/4 x 1/16	1/4 x 1/8	1/4 x 3/16 Δ
	1-1/8" #		**117077**	0.1			
	14MM		**119651**	0.3	5 x 2.3MM	5 x 5.3MM	5 x 5MM
	16MM		**119652**	0.3			
	18MM		**119653**	0.3	6 x 2.8MM	6 x 3.5MM	6 x 6MM
	19MM		**119570**	0.3			
	20MM		**119579**	0.3			
	22MM		**119580**	0.3			
	24MM		**119581**	0.2	8 X 3.3MM	8 X 4MM	8 X 7MM
	25MM		**119582**	0.2			
1210	1/2"		**119191**	0.6	1/8 x 1/16	1/8 x 1/16	1/8 x 1/8
	9/16"		**119192**	0.6			
	5/8"		**117078**	0.6	3/16 x 3/32	3/16 x 3/32	3/16 x 3/16
	11/16"		**119194**	0.5			
	3/4"	**119195**	**117154**	0.5			
	13/16"		**119196**	0.5			
	7/8"	**119197**	**117079**	0.5			
	15/16"		**119198**	0.5	1/4 x 1/8	1/4 x 1/8	1/4 x 1/4
	1"	**119199**	**117155**	0.5			
	1-1/16"		**119200**	0.4			
	1-1/8"	**119201**	**117080**	0.4			
	1-3/16"		**117156**	0.4			
	1-1/4"		**117157**	0.4			
	14MM		**119583**	0.6	5 x 2.3MM	5 x 5.3MM	5 x 5MM
	16MM		**119654**	0.6			
	18MM		**119584**	0.5	6 x 2.8MM	6 x 3.5MM	6 x 6MM
	19MM		**119571**	0.5			
	20MM		**119585**	0.5			
	22MM		**119655**	0.5			
	24MM		**119586**	0.5	8 X 3.3MM	8 X 4MM	8 X 7MM
	25MM		**119587**	0.4			
	28MM		**119588**	0.4			
	30MM		**119589**	0.4			
	32MM		**119590**	0.4	10 X 3.3MM	10 X 5MM	10 X 8MM

Δ Key furnished for these sizes ONLY
\+ These sizes are STEEL
\# Refer to torque capacity ratings on page PT6-3. If service factor of 2.0 or greater is required consult DODGE

TL Bush Size	Bore	P/N Integral Key	P/N Keyway	WT.	Bushing Keyway	Shaft Keyway REF	Key Size REF
1215	1/2"		**119001**	0.9	1/8 x 1/16	1/8 x 1/16	1/8 x 1/8
	9/16"		**119002**	0.9			
	5/8"		**119003**	0.8	3/16 x 3/32	3/16 x 3/32	3/16 x 3/16
	11/16"		**119004**	0.8			
	3/4"		**119005**	0.8			
	13/16"		**119006**	0.8			
	7/8"		**119007**	0.8			
	15/16"		**119008**	0.8	1/4 x 1/8	1/4 x 1/8	1/4 x 1/4
	1"		**119009**	0.7			
	1-1/16"		**119010**	0.6			
	1-1/8"		**119011**	0.6			
	1-3/16"		**119012**	0.5			
	1-1/4"		**119013**	0.5			
1310	1/2"		**119390**	0.7	1/8 x 1/16	1/8 x 1/16	1/8 x 1/8
	9/16"		**119391**	0.7			
	5/8"		**119392**	0.7	3/16 x 3/32	3/16 x 3/32	3/16 x 3/16
	11/16"		**119393**	0.7			
	3/4"		**119394**	0.7			
	13/16"		**119395**	0.7			
	7/8"		**119396**	0.7			
	15/16"		**119397**	0.6	1/4 x 1/8	1/4 x 1/8	1/4 x 1/4
	1"		**119398**	0.6			
	1-1/16"		**119399**	0.6			
	1-1/8"		**119400**	0.6			
	1-3/16"		**119401**	0.6			
	1-1/4"		**119402**	0.6			
	1-5/16" #		**119403**	0.6	5/16 x 5/32	5/16 x 5/32	5/16 x 5/16
	1-3/8" #		**119404**	0.6			
	1-7/16" +		**119438**	0.6	3/8 x 1/8	3/8 x 3/16	3/8 x 5/16 Δ
	14MM		**119656**	0.7	5 x 2.3MM	5 x 5.3MM	5 x 5MM
	16MM		**119657**	0.7			
	18MM		**119658**	0.7	6 x 2.8MM	6 x 3.5MM	6 x 6MM
	19MM		**119572**	0.7			
	20MM		**119659**	0.6			
	22MM		**119660**	0.6			
	24MM		**119591**	0.6	8 X 3.3MM	8 X 4MM	8 X 7MM
	25MM		**119592**	0.5			
	28MM		**119593**	0.5			
	30MM		**119594**	0.5			
	32MM		**119595**	0.4	10 X 3.3MM	10 X 5MM	10 X 8MM
	35MM		**119596**	0.4			
1610	1/2"		**119211**	0.9	1/8 x 1/16	1/8 x 1/16	1/8 x 1/8
	9/16"		**119212**	0.9			
	5/8"	**119213**	**117081**	0.9	3/16 x 3/32	3/16 x 3/32	3/16 x 3/16
	11/16"		**119214**	0.9			
	3/4"	**119215**	**117158**	0.9			
	13/16"		**119216**	0.9			
	7/8"	**119217**	**117082**	0.8			
	15/16"		**117083**	0.8	1/4 x 1/8	1/4 x 1/8	1/4 x 1/4
	1"	**119219**	**117159**	0.8			
	1-1/16"		**119220**	0.8			
	1-1/8"	**119221**	**117084**	0.7			
	1-3/16"	**119222**	**117160**	0.7			
	1-1/4"	**119223**	**117161**	0.7			
	1-5/16"		**119224**	0.6	5/16 x 5/32	5/16 x 5/32	5/16 x 5/16
	1-3/8"	**119225**	**117085**	0.6			
	1-7/16"	**119226**	**117162**	0.6	3/8 x 3/16	3/8 x 3/16	3/8 x 3/8
	1-1/2"	**119227**	**117163**	0.5			
	1-9/16" #		**119228**	0.5	3/8 x 1/8	3/8 x 3/16	3/8 x 5/16 Δ
	1-5/8" #	**119229**	**117086**	0.5			
	1-11/16" +		**117071**	0.5			
	14MM		**119661**	0.9	5 x 2.3MM	5 x 5.3MM	5 x 5MM
	16MM		**119662**	0.9			

T-L FEATURES/BENEFITS PAGE PT6-2	T-L SPECIFICATION PAGE PT6-3	QD BUSHINGS PAGE PT6-16	GT BUSHINGS PAGE PT6-28

SPECIFICATION

TAPER-LOCK Bushings - Stock Bore

TL Bush Size	Bore	P/N Integral Key	P/N Keyway	WT.	Bushing Keyway	Shaft Keyway REF	Key Size REF
1610 (cont)	18MM		**119663**	0.9	6 x 2.8MM	6 x 3.5MM	6 x 6MM
	19MM		**119573**	0.8			
	20MM		**119598**	0.8			
	22MM		**119236**	0.8			
	24MM		**119599**	0.8	8 X 3.3MM	8 X 4MM	8 X 7MM
	25MM		**119600**	0.7			
	28MM		**119601**	0.7			
	30MM		**119602**	0.7			
	32MM		**119603**	0.6	10 X 3.3MM	10 X 5MM	10 X 8MM
	35MM		**119604**	0.6			
	38MM		**119605**	0.5			
	40MM		**119606**	0.5	12 X 3.3MM	12 X 5MM	12 X 8MM
	42MM +		**393002**	0.5			
1615	1/2"		**119040**	1.3	1/8 x 1/16	1/8 x 1/16	1/8 x 1/8
	9/16"		**119041**	1.3			
	5/8"		**119042**	1.3	3/16 x 3/32	3/16 x 3/32	3/16 x 3/16
	11/16"		**119043**	1.2			
	3/4"		**119044**	1.2			
	13/16"		**119045**	1.2			
	7/8"		**119046**	1.1			
	15/16"		**119047**	1.1	1/4 x 1/8	1/4 x 1/8	1/4 x 1/4
	1"		**119048**	1.1			
	1-1/16"		**119049**	1			
	1-1/8"		**119050**	1			
	1-3/16"		**119051**	1			
	1-1/4"		**119052**	0.9			
	1-5/16"		**119053**	0.8	5/16 x 5/32	5/16 x 5/32	5/16 x 5/16
	1-3/8"		**119054**	0.8			
	1-7/16"		**119055**	0.7	3/8 x 3/16	3/8 x 3/16	3/8 x 3/8
	1-1/2"		**119056**	0.7			
	1-9/16" #		**119057**	0.7	3/8 x 1/8	3/8 x 3/16	3/8 x 5/16 Δ
	1-5/8" #		**119058**	0.6			
	1-11/16" +		**119068**	0.6			
	25MM		**119039**	0.7	8 X 3.3MM	8 X 4MM	8 X 7MM
	35MM		**119038**	0.7	10 X 3.3MM	10 X 5MM	10 X 8MM
2012	1/2"		**119241**	1.7	1/8 x 1/16	1/8 x 1/16	1/8 x 1/8
	9/16"		**119242**	1.7			
	5/8"		**117087**	1.7	3/16 x 3/32	3/16 x 3/32	3/16 x 3/16
	11/16"		**119244**	1.7			
	3/4"		**117088**	1.7			
	13/16"		**119246**	1.7			
	7/8"		**117089**	1.6			
	15/16"		**119248**	1.6	1/4 x 1/8	1/4 x 1/8	1/4 x 1/4
	1"	**119249**	**117164**	1.6			
	1-1/16"		**119250**	1.6			
	1-1/8"		**117090**	1.5			
	1-3/16"	**119252**	**117165**	1.5			
	1-1/4"	**119253**	**117166**	1.4			
	1-5/16"		**119254**	1.3	5/16 x 5/32	5/16 x 5/32	5/16 x 5/16
	1-3/8"		**117091**	1.2			
	1-7/16"	**119256**	**117167**	1.2	3/8 x 3/16	3/8 x 3/16	3/8 x 3/8
	1-1/2"	**119257**	**117168**	1.2			
	1-9/16"		**119258**	1.2			
	1-5/8"		**117092**	1.2			
	1-11/16"		**117093**	1.1			
	1-3/4"		**117094**	1			
	1-13/16"		**119262**	1	1/2 x 1/4	1/2 x 1/4	1/2 x 1/2
	1-7/8"		**117095**	0.9			

TL Bush Size	Bore	P/N Integral Key	P/N Keyway	WT.	Bushing Keyway	Shaft Keyway REF	Key Size REF
2012 (cont)	1-15/16" #		**117169**	0.9	1/2 x 3/16	1/2 x 1/4	1/2 x 7/16 Δ
	2" #		**117170**	0.9			
	2-1/8" +		**117177**	0.9			
	14MM		**119664**	1.7	5 x 2.3MM	5 x 5.3MM	5 x 5MM
	16MM		**119665**	1.7			
	18MM		**119666**	1.6	6 x 2.8MM	6 x 3.5MM	6 x 6MM
	19MM		**119574**	1.6			
	20MM		**119607**	1.6			
	22MM		**119667**	1.6			
	24MM		**119608**	1.5	8 X 3.3MM	8 X 4MM	8 X 7MM
	25MM		**119609**	1.5			
	28MM		**119610**	1.5			
	30MM		**119611**	1.4			
	32MM		**119612**	1.4	10 X 3.3MM	10 X 5MM	10 X 8MM
	35MM		**119613**	1.3			
	38MM		**119614**	1.3			
	40MM		**119615**	1.2	12 X 3.3MM	12 X 5MM	12 X 8MM
	42MM		**119616**	1.1			
	45MM		**119617**	1	14 X 3.8MM	14 X 5.5MM	14 X 9MM
	48MM		**119668**	0.9			
2517	1/2"		**119100**	3.7	1/8 x 1/16	1/8 x 1/16	1/8 x 1/8
	5/8"		**119102**	3.6	3/16 x 3/32	3/16 x 3/32	3/16 x 3/16
	11/16"		**119103**	3.5			
	3/4"		**119104**	3.4			
	13/16"		**119105**	3.4			
	7/8"		**119106**	3.3			
	15/16"		**119107**	3.3	1/4 x 1/8	1/4 x 1/8	1/4 x 1/4
	1"		**119108**	3.3			
	1-1/16"		**119109**	3.2			
	1-1/8"		**119110**	3.2			
	1-3/16"		**119111**	3.2			
	1-1/4"		**119112**	3.2			
	1-5/16"		**119113**	3.1	5/16 x 5/32	5/16 x 5/32	5/16 x 5/16
	1-3/8"		**119114**	3.1			
	1-7/16"		**119115**	3	3/8 x 3/16	3/8 x 3/16	3/8 x 3/8
	1-1/2"		**119116**	2.9			
	1-9/16"		**119117**	2.9			
	1-5/8"	**119144**	**119118**	2.8			
	1-11/16"		**119119**	2.8			
	1-3/4"		**119120**	2.7			
	1-13/16"		**119121**	2.6	1/2 x 1/4	1/2 x 1/4	1/2 x 1/2
	1-7/8"		**119122**	2.5			
	1-15/16"		**117173**	2.4			
	2"	**119123**	**117174**	2.3			
	2-1/16"	**119124**	**119125**	2.3			
	2-1/8"		**117096**	2.2			
	2-3/16"		**117175**	2.1			
	2-1/4"		**117097**	2			
	2-5/16"		**119129**	1.9	5/8 x 3/16	5/8 x 5/16	5/8 x 1/2 Δ
	2-3/8"		**117098**	1.9			
	2-7/16" #		**117176**	1.8			
	2-1/2" #		**117099**	1.8			
	2-5/8" +		**117111**	1.8			
	2-11/16" +		**117115**	1.8			
	14MM		**119669**	3.6	5 x 2.3MM	5 x 5.3MM	5 x 5MM
	16MM		**119670**	3.6			
	18MM		**119671**	3.5	6 x 2.8MM	6 x 3.5MM	6 x 6MM
	19MM		**119672**	3.4			
	20MM		**119618**	3.4			
	22MM		**119619**	3.3			
	24MM		**119620**	3.3	8 X 3.3MM	8 X 4MM	8 X 7MM
	25MM		**119621**	3.2			
	28MM		**119622**	3.1			
	30MM		**119623**	3.1			

Δ Key furnished for these sizes ONLY
\+ These sizes are STEEL
\# Refer to torque capacity ratings on page PT6-3. If service factor of 2.0 or greater is required consult DODGE

T-L FEATURES/BENEFITS PAGE PT6-2	T-L SPECIFICATION PAGE PT6-3	QD BUSHINGS PAGE PT6-16	GT BUSHINGS PAGE PT6-28

SPECIFICATION

TAPER-LOCK Bushings - Stock Bore

TL Bush Size	Bore	P/N Integral Key	P/N Keyway	WT.	Bushing Keyway	Shaft Keyway REF	Key Size REF
2517 (cont)	32MM		**119624**	3	10 X 3.3MM	10 X 5MM	10 X 8MM
	35MM		**119625**	2.9			
	38MM		**119626**	2.9			
	40MM		**119627**	2.8	12 X 3.3MM	12 X 5MM	12 X 8MM
	42MM		**119628**	2.6			
	45MM		**119629**	2.5	14 X 3.8MM	14 X 5.5MM	14 X 9MM
	48MM		**119630**	2.4			
	50MM		**119640**	2.3			
	55MM		**119641**	2	16 X 4.3MM	16 X 6MM	16 X 10MM
	60MM		**119642**	1.7	18 X 4.4MM	18 X 7MM	18 X 11MM
	65MM		**119643**	1.4			

TL Bush Size	Bore	P/N Keyway	WT.	Bushing Keyway	Shaft Keyway REF	Key Size REF
2525	3/4"	**119304**	4.9	3/16 x 3/32	3/16 x 3/32	3/16 x 3/16
	7/8"	**119306**	4.8			
	15/16"	**119307**	4.8	1/4 x 1/8	1/4 x 1/8	1/4 x 1/4
	1"	**119308**	4.8			
	1-1/8"	**119310**	4.6			
	1-3/16"	**119311**	4.5			
	1-1/4"	**119312**	4.4			
	1-3/8"	**119314**	4.2	5/16 x 5/32	5/16 x 5/32	5/16 x 5/16
	1-7/16"	**119315**	4.2	3/8 x 3/16	3/8 x 3/16	3/8 x 3/8
	1-1/2"	**119316**	4			
	1-5/8"	**119318**	3.8			
	1-11/16"	**119319**	3.8			
	1-3/4"	**119320**	3.7			
	1-13/16"	**119321**	3.2	1/2 x 1/4	1/2 x 1/4	1/2 x 1/2
	1-7/8"	**119322**	3.4			
	1-15/16"	**119323**	3.2			
	2"	**119324**	3.1			
	2-1/8"	**119326**	2.9			
	2-3/16"	**119327**	2.5			
	2-1/4"	**119328**	2.3	5/8 x 3/16	5/8 x 5/16	5/8 x 1/2 Δ
	2-5/16"	**119329**	2			
	2-3/8"	**119330**	2			
	2-7/16"	**119331**	2			
	2-1/2"	**119332**	2			
3020	7/8"	**117103**	6.5	3/16 x 3/32	3/16 x 3/32	3/16 x 3/16
	15/16"	**117101**	6.5	1/4 x 1/8	1/4 x 1/8	1/4 x 1/4
	1"	**117102**	6.5			
	1-1/8"	**117104**	6.4			
	1-3/16"	**117105**	6.4			
	1-1/4"	**117106**	6.3			
	1-5/16"	**117107**	6.1	5/16 x 5/32	5/16 x 5/32	5/16 x 5/16
	1-3/8"	**117108**	6			
	1-7/16"	**117109**	6	3/8 x 3/16	3/8 x 3/16	3/8 x 3/8
	1-1/2"	**117110**	5.9			
	1-9/16"	**117135**	5.9			
	1-5/8"	**117112**	5.9			
	1-11/16"	**117113**	5.7			
	1-3/4"	**117114**	5.6			
	1-13/16"	**117136**	5.5	1/2 x 1/4	1/2 x 1/4	1/2 x 1/2
	1-7/8"	**117116**	5.4			
	1-15/16"	**117117**	5.3			
	2"	**117118**	5.2			
	2-1/16"	**117119**	5			
	2-1/8"	**117120**	5			
	2-3/16"	**117121**	4.9			
	2-1/4"	**117122**	4.8			

TL Bush Size	Bore	P/N Keyway	WT.	Bushing Keyway	Shaft Keyway REF	Key Size REF
3020 (cont)	2-5/16"	**117137**	4.6	5/8 x 5/16	5/8 x 5/16	5/8 x 5/8
	2-3/8"	**117124**	4.5			
	2-7/16"	**117125**	4.4			
	2-1/2"	**117126**	4.3			
	2-5/8"	**117128**	4			
	2-11/16"	**117129**	3.9			
	2-3/4"	**117130**	3.7			
	2-13/16"	**117139**	3.7	3/4 x 1/4	3/4 x 3/8	3/4 x 5/8 Δ
	2-7/8"	**117132**	3.6			
	2-15/16" #	**117133**	3.6			
	3" #	**117134**	3.4			
	3-1/8" +	**117178**	3.3			
	3-3/16" +	**117179**	3.3			
	3-1/4" +	**117180**	3.3			
	24MM	**119673**	6.5	8 X 3.3MM	8 X 4MM	8 X 7MM
	25MM	**119674**	6.5			
	28MM	**119675**	6.4			
	30MM	**119676**	6.4			
	32MM	**119677**	6.3	10 X 3.3MM	10 X 5MM	10 X 8MM
	35MM	**119678**	6			
	38MM	**119679**	5.9			
	40MM	**119680**	5.9	12 X 3.3MM	12 X 5MM	12 X 8MM
	42MM	**119681**	5.8			
	45MM	**119682**	5.6	14 X 3.8MM	14 X 5.5MM	14 X 9MM
	48MM	**119644**	5.5			
	50MM	**119645**	5.2			
	55MM	**119646**	5	16 X 4.3MM	16 X 6MM	16 X 10MM
	60MM	**119647**	4.9	18 X 4.4MM	18 X 7MM	18 X 11MM
	65MM	**119648**	4.3			
	70MM	**119649**	3.7	20 X 4.9MM	20 X 7.5MM	20 X 12MM
	75MM	**119650**	3.5			
	80MM +	**117721**	4	22 X 5.4MM	22 X 9MM	22 X 14MM
3030	15/16"	**117004**	10	1/4 x 1/8	1/4 x 1/8	1/4 x 1/4
	1"	**117005**	9.4			
	1-1/8"	**117007**	9.4			
	1-3/16"	**117008**	9.2			
	1-1/4"	**117009**	9			
	1-5/16"	**117010**	8.9	5/16 x 5/32	5/16 x 5/32	5/16 x 5/16
	1-3/8"	**117011**	8.8			
	1-7/16"	**117012**	8.6	3/8 x 3/16	3/8 x 3/16	3/8 x 3/8
	1-1/2"	**117013**	8.5			
	1-9/16"	**117014**	8.4			
	1-5/8"	**117015**	8.2			
	1-11/16"	**117016**	8			
	1-3/4"	**117017**	7.8			
	1-13/16"	**117018**	7.6	1/2 x 1/4	1/2 x 1/4	1/2 x 1/2
	1-7/8"	**117019**	7.5			
	1-15/16"	**117020**	7.4			
	2"	**117021**	7.3			
	2-1/16"	**117022**	7.2			
	2-1/8"	**117023**	7.1			
	2-3/16"	**117024**	6.9			
	2-1/4"	**117025**	6.7			
	2-5/16"	**117026**	6.6	5/8 x 5/16	5/8 x 5/16	5/8 x 5/8
	2-3/8"	**117027**	6.4			
	2-7/16"	**117028**	6.2			
	2-1/2"	**117029**	6.1			
	2-5/8"	**117031**	6			
	2-11/16"	**117032**	5.9			
	2-3/4"	**117033**	5.6			
	2-7/8"	**117035**	5.3	3/4 x 1/8	3/4 x 3/8	3/4 x 1/2 Δ
	2-15/16" #	**117036**	5			
	3" #	**117037**	4.9			
	3-1/8" +	**117181**	4.7			
	3-3/16" +	**117182**	4.7			
	3-1/4" +	**117183**	4.7	3/4 x 1/4	3/4 x 3/8	3/4 x 5/8 Δ
	28MM	**119808**	9.4	8 X 3.3MM	8 X 4MM	8 X 7MM
	32MM	**119809**	9	10 X 3.3MM	10 X 5MM	10 X 8MM
	38MM	**119810**	8.4			
	48MM	**119811**	7.6	14 X 3.8MM	14 X 5.5MM	14 X 9MM

Δ Key furnished for these sizes ONLY
\+ These sizes are STEEL
\# Refer to torque capacity ratings on page PT6-3. If service factor of 2.0 or greater is required consult DODGE

T-L FEATURES/BENEFITS PAGE PT6-2	T-L SPECIFICATION PAGE PT6-3	QD BUSHINGS PAGE PT6-16	GT BUSHINGS PAGE PT6-28

SPECIFICATION

TAPER-LOCK Bushings - Stock Bore

TL Bush Size	Bore	P/N Keyway	WT.	Bushing Keyway	Shaft Keyway REF	Key Size REF
3030 (cont)	55MM	**119812**	6.9	16 X 4.3MM	16 X 6MM	16 X 10MM
	60MM	**119813**	6.4	18 X 4.4MM	18 X 7MM	18 X 11MM
	80MM +	**119895**	4	22 X 5.4MM	22 X 9MM	22 X 14MM
3525	1-3/16"	**119702**	16	1/4 x 1/8	1/4 x 1/8	1/4 x 1/4
	1-1/4"	**119703**	14.6			
	1-5/16"	**119791**	14.6	5/16 x 5/32	5/16 x 5/32	5/16 x 5/16
	1-3/8"	**119704**	14.3			
	1-7/16"	**119734**	14.2	3/8 x 3/16	3/8 x 3/16	3/8 x 3/8
	1-1/2"	**119705**	14			
	1-9/16"	**119792**	14			
	1-5/8"	**119735**	14			
	1-11/16"	**119706**	13.9			
	1-3/4"	**119707**	13.4			
	1-13/16"	**119793**	13.3	1/2 x 1/4	1/2 x 1/4	1/2 x 1/2
	1-7/8"	**119708**	13.2			
	1-15/16"	**119709**	13			
	2"	**119710**	13			
	2-1/8"	**119711**	12.6			
	2-3/16"	**119712**	12.4			
	2-1/4"	**119713**	12.3			
	2-5/16"	**119736**	12.2	5/8 x 5/16	5/8 x 5/16	5/8 x 5/8
	2-3/8"	**119714**	12			
	2-7/16"	**119715**	11.7			
	2-1/2"	**119716**	11.5			
	2-9/16"	**119795**	11.4			
	2-5/8"	**119717**	11.1			
	2-11/16"	**119718**	10.7			
	2-3/4"	**119719**	10.4			
	2-13/16"	**119796**	10.3	3/4 x 3/8	3/4 x 3/8	3/4 x 3/4
	2-7/8"	**119720**	10.1			
	2-15/16"	**119721**	10.5			
	3"	**119722**	9.5			
	3-1/16"	**119797**	9.4			
	3-1/8"	**119723**	9.3			
	3-3/16"	**119724**	8.6			
	3-1/4"	**119725**	8.8			
	3-5/16"	**119737**	8.6	7/8 x 1/8	7/8 x 7/16	7/8 x 9/16 Δ
	3-3/8"	**119726**	8.5	7/8 x 3/16	7/8 x 7/16	7/8 x 5/8 Δ
	3-7/16"	**119727**	8.2			
	3-1/2"	**119728**	8			
	3-9/16"	**119798**	8			
	3-5/8" #	**119729**	7.9			
	3-11/16" #	**119730**	7.9			
	3-3/4" #	**119731**	7.9			
	3-13/16" #	**119799**	7.9	1 x 1/4	1 x 1/2	1 x 3/4 Δ
	3-7/8" #	**119732**	7.9			
	3-15/16" #	**119733**	7.9			
3535	1-3/16"	**117207**	15.2	1/4 x 1/8	1/4 x 1/8	1/4 x 1/4
	1-1/4"	**117208**	14.9			
	1-3/8"	**117209**	14.8	5/16 x 5/32	5/16 x 5/32	5/16 x 5/16
	1-7/16"	**117210**	14.6	3/8 x 3/16	3/8 x 3/16	3/8 x 3/8
	1-1/2"	**117211**	14.4			
	1-5/8"	**117212**	14.1			
	1-11/16"	**117213**	14			
	1-3/4"	**117214**	14			
	1-7/8"	**117215**	13.6	1/2 x 1/4	1/2 x 1/4	1/2 x 1/2
	1-15/16"	**117216**	13.4			
	2"	**117217**	13.1			
	2-1/8"	**117218**	12.6			
	2-3/16"	**117219**	12.4			
	2-1/4"	**117220**	12.2			

TL Bush Size	Bore	P/N Keyway	WT.	Bushing Keyway	Shaft Keyway REF	Key Size REF
3535 (cont)	2-5/16"	**117237**	12	5/8 x 5/16	5/8 x 5/16	5/8 x 5/8
	2-3/8"	**117221**	11.7			
	2-7/16"	**117222**	11.7			
	2-1/2"	**117223**	11			
	2-5/8"	**117224**	10.9			
	2-11/16"	**117225**	10.7			
	2-3/4"	**117226**	10			
	2-7/8"	**117227**	9.8	3/4 x 3/8	3/4 x 3/8	3/4 x 3/4
	2-15/16"	**117228**	9.7			
	3"	**117229**	9.2			
	3-1/8"	**117230**	9.2			
	3-3/16"	**117231**	8.8			
	3-1/4"	**117232**	8.7			
	3-5/16"	**117236**	8.6	7/8 x 1/8	7/8 x 7/16	7/8 x 9/16 Δ
	3-3/8"	**117233**	8.7			
	3-7/16"	**117234**	8.3	7/8 x 3/16	7/8 x 7/16	7/8 x 5/8 Δ
	3-1/2"	**117235**	8			
	3-5/8" #	**117707**	7.1	7/8 x 1/4	7/8 x 7/16	7/8 x 11/16 Δ
	3-11/16" #	**117708**	6.8	7/8 x 3/16	7/8 x 7/16	7/8 x 5/8 Δ
	3-3/4" #	**117709**	6.4			
	3-7/8" #	**117710**	6	1 x 1/4	1 x 1/2	1 x 3/4 Δ
	3-15/16" #	**117703**	5.6			
	32MM	**119814**	14.6	10 X 3.3MM	10 X 5MM	10 X 8MM
	38MM	**119815**	14			
	48MM	**119816**	13.2	14 X 3.8MM	14 X 5.5MM	14 X 9MM
	50MM	**117738**	13			
	55MM	**119817**	11.1	16 X 4.3MM	16 X 6MM	16 X 10MM
	60MM	**119683**	11.1	18 X 4.4MM	18 X 7MM	18 X 11MM
	65MM	**117737**	11			
	75MM	**117722**	10	20 X 4.9MM	20 X 7.5MM	20 X 12MM
	80MM	**117297**	10	22 X 5.4MM	22 X 9MM	22 X 14MM
	85MM	**393170**	10			
	90MM	**426013**	10	25 X 5.4MM	25 X 9MM	25 x 14MM
	95MM	**426013**	10			
4030	1-7/16"	**119738**	24	3/8 x 3/16	3/8 x 3/16	3/8 x 3/8
	1-1/2"	**119739**	22			
	1-9/16"	**119770**	21.9			
	1-5/8"	**119740**	21.8			
	1-11/16"	**119771**	21.5			
	1-3/4"	**119772**	21.2			
	1-13/16"	**119773**	21	1/2 x 1/4	1/2 x 1/4	1/2 x 1/2
	1-7/8"	**119774**	20.9			
	1-15/16"	**119775**	20.7			
	2"	**119741**	20.6			
	2-1/16"	**119776**	20.6			
	2-1/8"	**119742**	20.7			
	2-3/16"	**119743**	20.4			
	2-1/4"	**119744**	20.1			
	2-5/16"	**119777**	20	5/8 x 5/16	5/8 x 5/16	5/8 x 5/8
	2-3/8"	**119745**	19.5			
	2-7/16"	**119746**	19.3			
	2-1/2"	**119778**	19.2			
	2-9/16"	**119779**	19.1			
	2-5/8"	**119747**	19			
	2-11/16"	**119780**	18.4			
	2-3/4"	**119748**	17.7			
	2-13/16"	**119781**	17.5	3/4 x 3/8	3/4 x 3/8	3/4 x 3/4
	2-7/8"	**119749**	17.2			
	2-15/16"	**119750**	17.2			
	3"	**119751**	17			
	3-1/16"	**119782**	16.8			
	3-1/8"	**119752**	16.5			
	3-3/16"	**119783**	15.9			
	3-1/4"	**119753**	15.4			

Δ Key furnished for these sizes ONLY
\+ These sizes are STEEL
\# Refer to torque capacity ratings on page PT6-3. If service factor of 2.0 or greater is required consult DODGE

T-L FEATURES/BENEFITS PAGE PT6-2	T-L SPECIFICATION PAGE PT6-3	QD BUSHINGS PAGE PT6-16	GT BUSHINGS PAGE PT6-28

SPECIFICATION

TAPER-LOCK Bushings - Stock Bore

TL Bush Size	Bore	P/N Keyway	WT.	Bushing Keyway	Shaft Keyway REF	Key Size REF
4030 (cont)	3-5/16"	**119784**	14.9	7/8 x 7/16	7/8 x 7/16	7/8 x 7/8
	3-3/8"	**119754**	14.6			
	3-7/16"	**119755**	14.1			
	3-1/2"	**119756**	13.4			
	3-9/16"	**119785**	13.3			
	3-5/8"	**119757**	13.2			
	3-11/16"	**119786**	13			
	3-3/4"	**119758**	12.7	7/8 x 3/16	7/8 x 7/16	7/8 x 5/8 Δ
	3-13/16"	**119787**	12.7	1 x 1/2	1 x 1/2	1 x 1
	3-7/8"	**119759**	12.6	1 x 1/4	1 x 1/2	1 x 3/4 Δ
	3-15/16"	**119760**	12.6			
	4"	**119761**	12.6			
	4-1/8" #	**119788**	12.6			
	4-3/16" #	**119762**	12.6			
	4-1/4" #	**119763**	12.6			
	4-3/8" #	**119764**	12.6			
	4-7/16" #	**119765**	11.8			
4040	1-7/16"	**117310**	24	3/8 x 3/16	3/8 x 3/16	3/8 x 3/8
	1-1/2"	**117311**	22			
	1-5/8"	**117312**	22			
	1-11/16"	**117313**	21.9			
	1-3/4"	**117314**	21.9			
	1-7/8"	**117315**	21	1/2 x 1/4	1/2 x 1/4	1/2 x 1/2
	1-15/16"	**117316**	21.2			
	2"	**117317**	21.1			
	2-1/8"	**117318**	20.6			
	2-3/16"	**117319**	20.3			
	2-1/4"	**117320**	20.2			
	2-3/8"	**117321**	19.6	5/8 x 5/16	5/8 x 5/16	5/8 x 5/8
	2-7/16"	**117322**	19.3			
	2-1/2"	**117323**	18.8			
	2-5/8"	**117324**	18.7			
	2-11/16"	**117325**	18.3			
	2-3/4"	**117326**	18.2			
	2-13/16"	**117267**	17.8	3/4 x 3/8	3/4 x 3/8	3/4 x 3/4
	2-7/8"	**117327**	17.5			
	2-15/16"	**117328**	17.2			
	3"	**117329**	16.8			
	3-1/8"	**117330**	16.2			
	3-3/16"	**117331**	15.8			
	3-1/4"	**117332**	15.5			
	3-3/8"	**117333**	14.8	7/8 x 7/16	7/8 x 7/16	7/8 x 7/8
	3-7/16"	**117334**	14.4			
	3-1/2"	**117335**	14			
	3-5/8"	**117337**	13.5			
	3-11/16"	**117340**	13.5	7/8 x 3/16	7/8 x 7/16	7/8 x 5/8 Δ
	3-3/4"	**117336**	13.5			
	3-7/8"	**117341**	12.9	1 x 1/4	1 x 1/2	1 x 3/4 Δ
	3-15/16"	**117338**	12.5			
	4"	**117352**	12			
	4-1/8" #	**117714**	11.2			
	4-3/16" #	**117715**	10.7			
	4-1/4" #	**117716**	10.3			
	4-3/8" #	**117717**	9.5			
	4-7/16" #	**117704**	8.9			
	48MM	**119818**	21	14 X 3.8MM	14 X 5.5MM	14 X 9MM
	55MM	**119819**	20.4	16 X 4.3MM	16 X 6MM	16 X 10MM
	60MM	**119820**	19.5	18 X 4.4MM	18 X 7MM	18 X 11MM
	75MM	**117723**	10	20 X 4.9MM	20 X 7.5MM	20 X 12MM
	80MM	**117724**	10	22 X 5.4MM	22 X 9MM	22 X 14MM
	90MM	**117726**	10	25 X 5.4MM	25 X 9MM	25 x 14MM
	95MM	**117725**	10			
	100MM	**117729**	10	28 X 6.4MM	28 X 10MM	28 X 16MM

Δ Key furnished for these sizes ONLY
+ These sizes are STEEL
# Refer to torque capacity ratings on page PT6-3. If service factor of 2.0 or greater is required consult DODGE

TL Bush Size	Bore	P/N Keyway	WT.	Bushing Keyway	Shaft Keyway REF	Key Size REF
4535	1-15/16"	**114765**	31	1/2 x 1/4	1/2 x 1/4	1/2 x 1/2
	2"	**114766**	29.7			
	2-1/16"	**114767**	29.5			
	2-1/8"	**114768**	29.3			
	2-3/16"	**114769**	29			
	2-1/4"	**114770**	28.8			
	2-5/16"	**114771**	28.6	5/8 x 5/16	5/8 x 5/16	5/8 x 5/8
	2-3/8"	**114772**	27.4			
	2-7/16"	**114773**	28			
	2-1/2"	**114774**	26.7			
	2-9/16"	**114775**	26.4			
	2-5/8"	**114776**	25.9			
	2-11/16"	**114777**	25.4			
	2-3/4"	**114778**	25			
	2-13/16"	**114779**	24.9	3/4 x 3/8	3/4 x 3/8	3/4 x 3/4
	2-7/8"	**114780**	24.8			
	2-15/16"	**114781**	24.2			
	3"	**114782**	24.2			
	3-1/16"	**114783**	24.2			
	3-1/8"	**114784**	24.1			
	3-3/16"	**114785**	23.8			
	3-1/4"	**114786**	23.1			
	3-5/16"	**114787**	22.7	7/8 x 7/16	7/8 x 7/16	7/8 x 7/8
	3-3/8"	**114788**	22.4			
	3-7/16"	**114789**	21.5			
	3-1/2"	**114790**	21.3			
	3-9/16"	**114791**	21.1			
	3-5/8"	**114792**	21			
	3-11/16"	**114793**	20.3			
	3-3/4"	**114794**	19.9			
	3-13/16"	**114795**	19.6	1 x 1/2	1 x 1/2	1 x 1
	3-7/8"	**114796**	19.3			
	3-15/16"	**114797**	18.9			
	4"	**114798**	18.7			
	4-1/8"	**114799**	18.6			
	4-3/16"	**114800**	18.5			
	4-1/4"	**114801**	17.8			
	4-3/8"	**114802**	16.8	1 x 1/4	1 x 1/2	1 x 3/4 Δ
	4-7/16"	**114803**	15.4			
	4-1/2"	**114804**	15.3			
	4-3/4" #	**114805**	15.2	1-1/4 x 1/4	1-1/4 x 5/8	1-1/4 x 7/8 Δ
	4-7/8" #	**114806**	15.1			
	4-15/16" #	**114807**	14.9			
4545	1-15/16"	**117416**	29.9	1/2 x 1/4	1/2 x 1/4	1/2 x 1/2
	2"	**117417**	29.8			
	2-1/8"	**117849**	29.8			
	2-3/16"	**117419**	29			
	2-3/8"	**117421**	28.2	5/8 x 5/16	5/8 x 5/16	5/8 x 5/8
	2-7/16"	**117422**	27.9			
	2-1/2"	**117850**	27.5			
	2-5/8"	**117424**	27			
	2-3/4"	**117426**	26.5			
	2-7/8"	**117427**	25.7	3/4 x 3/8	3/4 x 3/8	3/4 x 3/4
	2-15/16"	**117428**	25.3			
	3"	**117429**	25.2			
	3-1/8"	**117430**	24.3			
	3-3/16"	**117431**	24.2			
	3-1/4"	**117432**	23.9			
	3-3/8"	**117433**	22.8	7/8 x 7/16	7/8 x 7/16	7/8 x 7/8
	3-7/16"	**117434**	22.6			
	3-1/2"	**117435**	22.1			
	3-5/8"	**117413**	21.2			
	3-3/4"	**117436**	20.3			
	3-7/8"	**117437**	19.5	1 x 1/2	1 x 1/2	1 x 1
	3-15/16"	**117438**	19			
	4"	**117439**	18.6			
	4-1/8"	**117444**	17.5			
	4-3/16"	**117443**	17.1			
	4-1/4"	**117441**	17			
	4-3/8"	**117442**	16.9	1 x 1/4	1 x 1/2	1 x 3/4

T-L FEATURES/BENEFITS PAGE PT6-2	T-L SPECIFICATION PAGE PT6-3	QD BUSHINGS PAGE PT6-16	GT BUSHINGS PAGE PT6-28

SPECIFICATION

TAPER-LOCK Bushings - Stock Bore

TL Bush Size	Bore	P/N Keyway	WT.	Bushing Keyway	Shaft Keyway REF	Key Size REF
4545 (cont)	4-7/16"	**117440**	16.5	1 x 1/4	1 x 1/2	1 x 3/4 Δ
	4-1/2"	**117447**	15.9			
	4-3/4" #	**117718**	13.9	1-1/4 x 1/4	1-1/4 x 5/8	1-1/4 x 7/8 Δ
	4-7/8" #	**117719**	12.9			
	4-15/16" #	**117705**	12.5			
5040	2-7/16"	**114865**	39.5	5/8 x 5/16	5/8 x 5/16	5/8 x 5/8
	2-1/2"	**114866**	38.3			
	2-9/16"	**114867**	37.7			
	2-5/8"	**114868**	37.1			
	2-11/16"	**114869**	36.9			
	2-3/4"	**114870**	36.6			
	2-13/16"	**114871**	36.5	3/4 x 3/8	3/4 x 3/8	3/4 x 3/4
	2-7/8"	**114872**	36.4			
	2-15/16"	**114873**	36.2			
	3"	**114874**	35.6			
	3-1/16"	**114875**	35.2			
	3-1/8"	**114876**	34.8			
	3-3/16"	**114877**	33.9			
	3-1/4"	**114878**	33.2			
	3-5/16"	**114879**	33	7/8 x 7/16	7/8 x 7/16	7/8 x 7/8
	3-3/8"	**114880**	32.7			
	3-7/16"	**114881**	32			
	3-1/2"	**114882**	31.7			
	3-9/16"	**114883**	31.4			
	3-5/8"	**114884**	31.1			
	3-11/16"	**114885**	30.4			
	3-3/4"	**114886**	29.7			
	3-13/16"	**114887**	29.4	1 x 1/2	1 x 1/2	1 x 1
	3-7/8"	**114888**	29			
	3-15/16"	**114889**	28.7			
	4"	**114890**	27.8			
	4-1/8"	**114891**	27.5			
	4-3/16"	**114892**	27.2			
	4-1/4"	**114893**	27			
	4-3/8"	**114894**	26			
	4-7/16"	**114895**	25.1			
	4-1/2"	**114896**	23.6			
	4-3/4"	**114897**	22.9	1-1/4 x 1/4	1-1/4 x 5/8	1-1/4 x 7/8 Δ
	4-7/8"	**114898**	22.2			
	4-15/16"	**114899**	20.6			
	5"	**114900**	20.5			
5050	2-7/16"	**117458**	39	5/8 x 5/16	5/8 x 5/16	5/8 x 5/8
	2-11/16"	**117450**	37.4			
	2-15/16"	**117459**	36	3/4 x 3/8	3/4 x 3/8	3/4 x 3/4
	3-3/8"	**117452**	33	7/8 x 7/16	7/8 x 7/16	7/8 x 7/8
	3-7/16"	**117460**	32.6			
	3-5/8"	**117453**	31.2			
	3-7/8"	**117454**	29.3	1 x 1/2	1 x 1/2	1 x 1
	3-15/16"	**117461**	28.6			
	4"	**117466**	28.3			
	4-1/4"	**117465**	26.2			
	4-3/8"	**117469**	25			
	4-7/16"	**117462**	24.4			
	4-1/2"	**117467**	23.9			
	4-5/8"	**117734**	23	1-1/4 x 1/4	1-1/4 x 5/8	1-1/4 x 7/8 Δ
	4-7/8"	**117468**	22.3			
	4-15/16"	**117463**	21.4			
	5"	**117464**	20.9			
	110MM	**117736**	26.2	28 X 6.4MM	28 X 10MM	28 X 16MM
6050	4-7/16"	**117474**	63.6	1 x 1/2	1 x 1/2	1 x 1
	4-15/16"	**117473**	58.2	1-1/4 x 5/8	1-1/4 x 5/8	1-1/4 x 1-1/4
	5-7/16"	**117475**	52.3			
	5-15/16"	**117476**	57.2	1-1/2 x 3/4	1-1/2 x 3/4	1-1/2 x 1-1/2
	6"	**117477**	46.4			

TL Bush Size	Bore	P/N Keyway	WT.	Bushing Keyway	Shaft Keyway REF	Key Size REF
7060	4-15/16"	**117490**	92	1-1/4 x 5/8	1-1/4 x 5/8	1-1/4 x 1-1/4
	5-7/16"	**117491**	84.5			
	5-15/16"	**117492**	78.2	1-1/2 x 3/4	1-1/2 x 3/4	1-1/2 x 1-1/2
	6"	**117493**	76.6			
	6-7/16"	**117494**	68.1			
	6-1/2"	**117495**	68.7			
	6-15/16"	**117496**	62.1	1-3/4 x 3/4	1-3/4 x 3/4	1-3/4 x 1-1/2
	7" #	**117497**	60.6			
8065	5-7/16"	**117479**	98.6	1-1/4 x 5/8	1-1/4 x 5/8	1-1/4 x 1-1/4
	5-15/16"	**117480**	105.7	1-1/2 x 3/4	1-1/2 x 3/4	1-1/2 x 1-1/2
	6-7/16"	**117481**	102.3			
	6-1/2"	**117482**	101.8			
	6-15/16"	**117488**	92	1-3/4 x 3/4	1-3/4 x 3/4	1-3/4 x 1-1/2
	7"	**117483**	91.1			
	7-1/2"	**117503**	89.9			
	8" #	**117484**	89.9	2 x 3/4	2 x 3/4	2 x 1-1/2
10085	7"	**117486**	245	1-3/4 x 3/4	1-3/4 x 3/4	1-3/4 x 1-1/2
	8"	**117485**	219	2 x 3/4	2 x 3/4	2 x 1-1/2
	8-1/4"	**117411**	210			
	9"	**117487**	190			
	10"	**117510**	157.5	2-1/2 x 7/8	2-1/2 x 7/8	2-1/2 x 1-3/4
120100	8"	**117522**	410	2 x 3/4	2 x 3/4	2 x 1-1/2
	8-1/2"	**117523**	395			
	9"	**117520**	380			
	9-1/2"	**117524**	365	2-1/2 x 7/8	2-1/2 x 7/8	2-1/2 x 1-3/4
	10"	**117521**	350			
	10-1/2"	**117525**	335			
	11"	**117526**	320			
	11-1/2"	**117527**	305	3 x 1	3 x 1	3 x 2
	12" #	**117508**	290			

Δ Key furnished for these sizes ONLY
+ These sizes are STEEL
# Refer to torque capacity ratings on page PT6-3. If service factor of 2.0 or greater is required consult DODGE

T-L FEATURES/BENEFITS PAGE PT6-2	T-L SPECIFICATION PAGE PT6-3	QD BUSHINGS PAGE PT6-16	GT BUSHINGS PAGE PT6-28

SPECIFICATION

TAPER-LOCK Bushings - Reborable

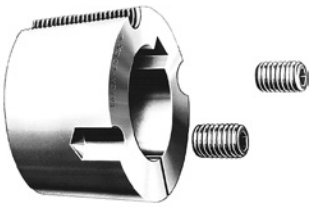

NOTE:
All reborable bushings are stocked without sawsplit to facilitate re-machining.
Sawsplit must be made in bushing to allow it to compress for proper gripping of the shaft. Factory rebore and keyseat service as listed in MLP price book includes sawsplit

TL Bush Size	Sintered Steel		Cast Iron		Ductile Iron		Steel		Stainless Steel	
	Bore	P/N	Bore	P/N	Bore	P/N	Bore	P/N	Bore	P/N
1008	1/2"	**119187**					1/2"	**119432**	1/2"	**119410**
1108	1/2"	**119361**					1/2"	**119433**	1/2"	**119411**
1210	1/2"	**119206**					1/2"	**119434**	1/2"	**119412**
1215	1/2"	**119023**					1/2"	**119435**	1/2"	**119413**
1310	1/2"	**119386**					1/2"	**119436**	1/2"	**119414**
1610	1/2"	**119209**					1/2"	**119421**	1/2"	**119415**
1615	1/2"	**119067**					1/2"	**119437**	1/2"	**119416**
2012	1/2"	**119272**					1/2"	**119422**	1/2"	**119417**
2517	1/2"	**119141**					1"	**119423**	5/8"	**119418**
2525							1-7/16"	**119429**		
3020	7/8"	**117147**					1-7/16"	**119430**	7/8"	**119419**
3020	1-11/16"	**117149**								
3030			15/16"	**117045**			1-7/16"	**119431**		
3525			1-3/16"	**119700**	1-3/16"	**119701**				
3535			1-3/16"	**117250**	1-7/16"	**117205**				
4030			1-7/16"	**119789**	1-15/16"	**119790**				
4040			1-7/16"	**117345**	1-15/16"	**117307**				
4535			1-15/16"	**119766**	2-7/16"	**119767**				
4545			1-15/16"	**117448**	2-7/16"	**117414**				
5040			2-7/16"	**119768**	2-15/16"	**119769**				
5050			2-7/16"	**117451**	2-15/16"	**117455**				
6050			3-7/16"	**117472**	3-7/16"	**117471**				
7060			3-15/16"	**117498**	3-15/16"	**117505**				
8065			4-7/16"	**117502**	4-7/16"	**117506**				
10085			7"	**117489**						
120100			8"	**117504**						

TAPER-LOCK Bushings - Maximum Bore Capacities (Inches)

TL Bush Size	Sintered Steel			Cast Iron			Ductile Iron			Steel		
	Full Key	Shallow Key	No * Key	Full Key	Shallow Key	No * Key	Full Key	Shallow Key	No * Key	Full Key	Shallow Key	No * Key
1008	7/8"	1"	1"							7/8"	1"	1"
1108	1"	1-1/8"	1-1/8"							1"	1-1/8"	1-1/8"
1210	1-1/4"	1-1/4"	1-1/4"							1-1/4"	1-1/4"	1-1/4"
1215	1-1/4"	1-1/4"	1-1/4"							1-1/4"	1-1/4"	1-1/4"
1310	1-3/8"	1-3/8"	1-3/8"							1-3/8"	1-7/16"	1-7/16"
1610	1-1/2"	1-5/8"	1-5/8"							1-5/8"	1-11/16"	1-11/16"
1615	1-1/2"	1-5/8"	1-5/8"							1-5/8"	1-11/16"	1-11/16"
2012	1-7/8"	2"	2"							2"	2-1/8"	2-1/8"
2517	2-1/4"	2-1/2"	2-1/2"							2-7/16"	2-11/16"	2-11/16"
2525				2-1/4"	2-1/2"	2-1/2"				2-3/8"	2-11/16"	2-11/16"
3020	2-3/4"	3"	3"	2-3/4"	3"	3"				3"	3-1/4"	3-1/4"
3030				2-3/4"	3"	3"				3"	3-1/4"	3-1/4"
3525				3-1/4"	3-1/2"	3-1/2"	3-1/2"	3-15/16"	3-15/16"			
3535				3-1/4"	3-1/2"	3-1/2"	3-1/2"	3-15/16"	3-15/16"			
4030				3-5/8"	4"	4"	4"	4-7/16"	4-7/16"			
4040				3-5/8"	4"	4"	4"	4-7/16"	4-7/16"			
4535				4-1/2"	4-1/2"	4-1/2"	4-1/2"	4-15/16"	4-15/16"			
4545				4-1/2"	4-1/2"	4-1/2"	4-1/2"	4-15/16"	4-15/16"			
5040				4-1/2"	5"	5"	5"	5-5/16"	5-5/16"			
5050				4-1/2"	5"	5"	5"	5-5/16"	5-5/16"			
6050				6"	6"	6"	6"	6"	6"			
7060				7"	7"	7"	7"	7"	7"			
8065				8"	8"	8"	8"	8"	8"			
10085				10"	10"	10"	10"	10"	10"			
120100				12"	12"	12"	12"	12"	12"			

* Verify torque capacity: Contact Application Engineering for assistance

T-L FEATURES/BENEFITS PAGE PT6-2	T-L SPECIFICATION PAGE PT6-3	QD BUSHINGS PAGE PT6-16	GT BUSHINGS PAGE PT6-28

SPECIFICATION

TAPER-LOCK Bushings - Reborable

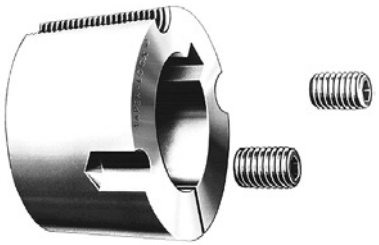

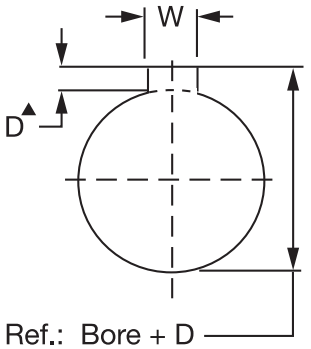

ISO STANDARD METHOD FOR MEASURING KEYSEAT DEPTH.

▲ Depth measured at centerline

TAPER-LOCK Bushings - Maximum Bore Capacities (Metric)

TL Bush Size	Min Bore	Sintered Steel			Cast Iron			Ductile Iron			Steel		
		Full Key	Shallow Key	No Key*	Full Key	Shallow Key	No Key*	Full Key	Shallow Key	No Key*	Full Key	Shallow Key	No Key*
1008	13	22	25	25							22	22	26
1108	13	25	25	29							25	28	29
1210	13	32	32	32							32	32	32
1215	13	32	32	32							32	32	32
1310	13	35	35	35							35	35	36
1610	13	40	40	40							42	42	44
1615	13	39	39	39							42	42	44
2012	13	50	50	51							50	50	55
2517	13	60	60	64							65	65	68
2525	20				60	60	64				65	65	68
3020	24	75	75	76							80	80	82
3030	24				75	75	76				80	80	82
3525	31				90	90	90	95	100	100			
3535	31				85	85	85	95	95	100			
4030	37				100	100	102	110	115	115			
4040	37				100	100	102	105	105	113			
4535	50				110	110	114	125	125	125			
4545	50				110	110	114	115	115	125			
5040	61				125	125	127	127	127	134			
5050	61				125	125	127	127	127	134			
6050	88				152	152	152	152	152	152			
7060	100				177	177	177	180	180	180			
8065	117				203	203	203	203	203	203			
10085	178				254	254	254	254	254	254			
120100	204				304	304	304	304	304	304			

NOTE: ISO STANDARD METHOD FOR MEASURING KEYSEAT DEPTH
MM Bore and Keyway dimensions conform to ISO standard recommendation R773, for "Free" fit
* Verify torque capability. Contact Application Engineering for assistance.

REFERENCE:
1 inch = 25.4 millimeters
1 millimeter = 0.03937 inches

T-L FEATURES/BENEFITS PAGE PT6-2	T-L SPECIFICATION PAGE PT6-3	QD BUSHINGS PAGE PT6-16	GT BUSHINGS PAGE PT6-28

SPECIFICATION

TAPER-LOCK Weld-On Hubs

DODGE Weld-On hubs are made of 1015-1025 steel, drilled, tapped, and taper bored to receive TAPER-LOCK bushings. They are useful for welding into fan rotors, pulleys, plate sprockets, impellers, agitators, etc. which must be firmly mounted onto shafting. Four types of hubs are available from stock:

TYPE W/WA: Rugged, full length size for single-hub heavy-duty applications.

TYPE K: More compact design, especially useful for two-hub construction such as conveyor pulleys.

TYPE S: Originally designed for use in smaller sprockets using up to Taper-Lock size 3535 bushings. Suitable for many other lighter-duty applications.

TYPE F: Features a larger flange diameter that can be welded into standard steel tubing to fabricate conveyor pulleys or process rolls.

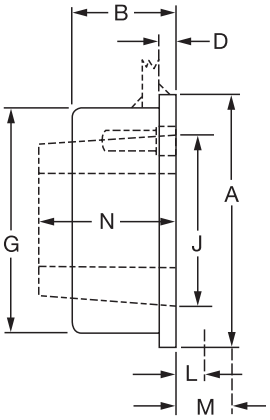

K25 to K50

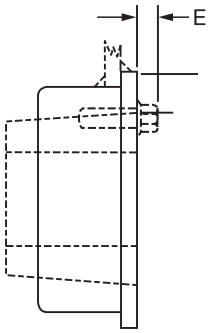

K60 to K120

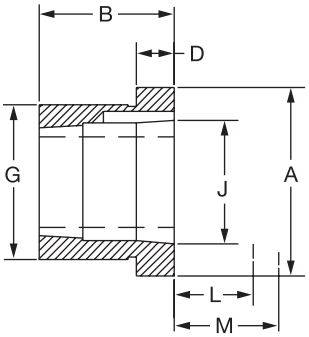

W12 to WA30

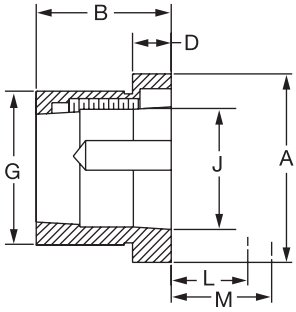

WA35 to WA100

TAPER-LOCK Type K And Type W/WA Weld-On Hubs

Hub No.	Part No.	Uses Bush.	Max. Bore	Wt. lbs.	Dimensions A	B+	D	E	G	J Ref.	L++	M**	N	Tolerances G Dimension	
W12	**228010**	1215	1-1/4	1.2	2.88	1.50	0.63	...	2.500*	1.88	1.38	1.63	1.50	*	+.000/-.002
W16	**228011**	1615	1-11/16	1.3	3.25	1.50	0.63	...	2.875*	2.25	1.38	1.63	1.50	@	+.000/-.003
W25	**228012**	2517	2-11/16	3.9	4.88	1.75	0.75	...	4.375*	3.38	1.63	2.25	1.75	~	+.000/-.004
WA30	**228087**	3030	3-1/4	8.6	5.50	3.00	0.75	...	5.125*	4.25	1.81	2.69	3.00		
WA35	**228088**	3535	3-15/16	15	6.75	3.50	1.00	...	6.250*	5.00	2.00	3.33 -	3.50	B Dimension	
WA40	**228089**	4040	4-7/16	29	7.75	4.00	1.00	...	7.250*	5.75	2.38	4.13	4.00	W/WA Hubs Only	
WA45	**228090**	4545	4-15/16	42	8.75	4.50	1.00	...	8.000*	6.38	2.63	4.75	4.50	+	+.001/-.125
WA50	**228091**	5050	5	57	9.50	5.00	1.00	...	8.750@	7.00	2.19	5.25	5.00		
WA60	**228092**	6050	6	115	13.25	5.00	1.25	1.44	12.250~	9.25	1.63	4.33	5.00		
WA70	**228093**	7060	7	158	14.5	6.00	1.25	1.44	13.500~	10.25	1.63	4.33	6.00		
WA80	**228094**	8065	8	180	15.25	6.50	1.25	1.44	14.125~	11.25	1.63	4.33	6.50		
WA100	**228095**	10085	10	340	19.75	8.50	1.50	1.75	18.750~	14.75	2.00	5.33	8.50		
K25	**207156**	2517	2-11/16	3.6	4.88	1.50	0.38	...	4.375*	3.38	1.63	2.25	1.75		
K30	**207157**	3020	3-1/4	7.8	5.50	1.63	0.75	...	5.125*	4.25	1.81	2.69	2.00		
K35	**228080**	3535	3-15/16	9.8	6.75	1.63	0.75	...	6.250*	5.00	2.00	3.33	3.50		
K40	**228081**	4040	4-7/16	10.8	7.75	2.13	0.50	...	7.250*	5.75	2.63	4.13	4.00		
K45	**228082**	4545	4-15/16	15.2	8.50	2.63	0.63	...	8.000*	6.83	2.63	4.75	4.50		
K50	**228083**	5050	5	29	9.25	2.88	0.63	...	8.750@	7.00	2.81	5.25	5.00		
K60	**228084**	6050	6	44	12.75	2.88	0.63	1.44	12.250~	9.25	1.63	4.33	5.00		
K70	**228085**	7060	7	60	14.00	3.38	0.75	1.44	13.500~	10.25	1.63	4.33	6.00		
K80	**228086**	8065	8	65	14.75	3.63	0.75	1.44	14.125~	11.25	1.63	4.33	6.5.		
K100	**228079**	10085	10	128	19.25	4.13	1.00	1.75	18.750~	14.75	2.00	5.33	8.50		
K120	**228058**	120100	12	225	22.25	5.38	1.00	1.75	21.750~	17.25	2.00	5.33	10.00		

++ Wrench clearance required to install bushing. ** Wrench clearance required to remove bushing.

T-L FEATURES/BENEFITS PAGE PT6-2	T-L SPECIFICATION PAGE PT6-3	QD BUSHINGS PAGE PT6-16	GT BUSHINGS PAGE PT6-28

SPECIFICATION

TAPER-LOCK Weld-On Hubs

Type S Weld-On Hubs

Hub No.	Part No.	Uses Bush.	Bore Range	Wt.	Dimensions A	B	C	D	G	G Toler.	J Ref.
S16-4	**097023**	1610	1/2 to 1-11/16”	.90	3.00	1.00	0.275	.73	2.875	+.000/-.002	2.25
S16-6	**097024**	1610	1/2 to 1-11/16”	.90	3.00	1.00	0.45	.55	2.875	+.000/-.002	2.25
S20-6	**097025**	2012	1/2 to 2-1/8”	1.80	3.56	1.25	0.45	.80	3.438	+.000/-.002	2.75
S20-8	**097015**	2012	1/2 to 2-1/8”	1.40	3.56	1.25	0.57	.68	3.438	+.000/-.002	2.75
S25-6	**097016**	2517	1/2 to 2-11/16”	2.60	4.25	1.75	0.45	1.3	4.125	+.000/-.002	3.33
S25-8	**097017**	2517	1/2 to 2-11/16”	2.60	4.25	1.75	0.565	1.19	4.125	+.000/-.002	3.33
S25-10	**097018**	2517	1/2 to 2-11/16”	2.50	4.25	1.75	0.685	1.07	4.125	+.000/-.002	3.33
S25-16	**097019**	2517	1/2 to 2-11/16”	2.40	4.25	1.75	1.09	.66	4.125	+.000/-.002	3.33
S30-10	**097020**	3020	15/16 to 3-1/4”	4.30	5.25	2.00	0.675	1.33	5.125	+.000/-.002	4.25
S30-16	**097021**	3020	15/16 to 3-1/4”	4.20	5.25	2.00	1.09	.91	5.125	+.000/-.002	4.25
S35	**097022**	3535	1-3/16 to 3-15/16”	12.80	6.50	3.50	1.16	2.34	6.375	+.000/-.002	5.00

TAPER-LOCK Type F Weld-On Hubs

Hub No.	Part No.	Uses Bush.	Bore Range	Wt.	A
6F25P	**226091**	2517	1/2 to 2-11/16”	3.9	6.048
6F25A	**226026**	2517	1/2 to 2-11/16”	3.8	5.685
6F25B	**226027**	2517	1/2 to 2-11/16”	3.8	5.664
6F25C	**226028**	2517	1/2 to 2-11/16”	3.8	5.625
6F25D	**226029**	2517	1/2 to 2-11/16”	3.8	5.579
6F25E	**226030**	2517	1/2 to 2-11/16”	3.8	5.537
8F25P	**226093**	2517	1/2 to 2-11/16”	6.3	7.962
8F25A	**226031**	2517	1/2 to 2-11/16”	6.2	7.685
8F25B	**226032**	2517	1/2 to 2-11/16”	6.2	7.664
8F25C	**226033**	2517	1/2 to 2-11/16”	6.2	7.625
8F25D	**226034**	2517	1/2 to 2-11/16”	6.2	7.579
8F25E	**226007**	2517	1/2 to 2-11/16”	6.2	7.537
F30	**226101**	3020	15/16 to 3-1/4”	5.3	5.75

Type S

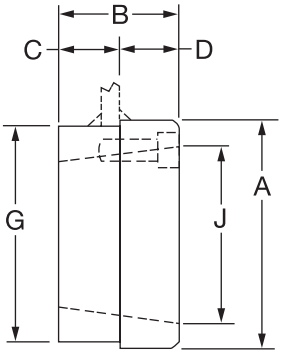

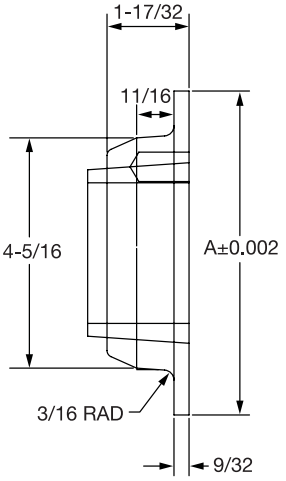

8F25

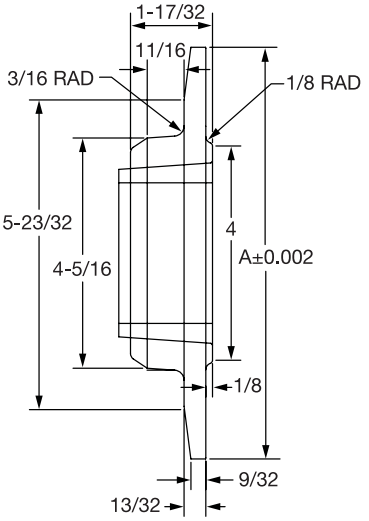

6F25

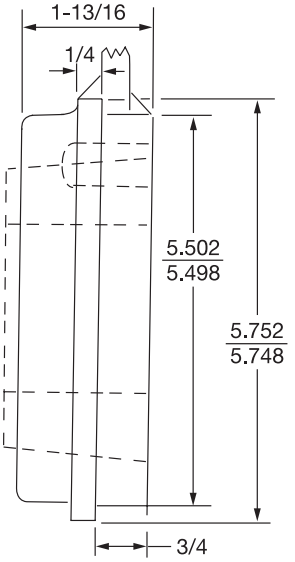

F30

T-L FEATURES/BENEFITS PAGE PT6-2	T-L SPECIFICATION PAGE PT6-3	QD BUSHINGS PAGE PT6-16	GT BUSHINGS PAGE PT6-28

SPECIFICATION

TAPER-LOCK Adapters

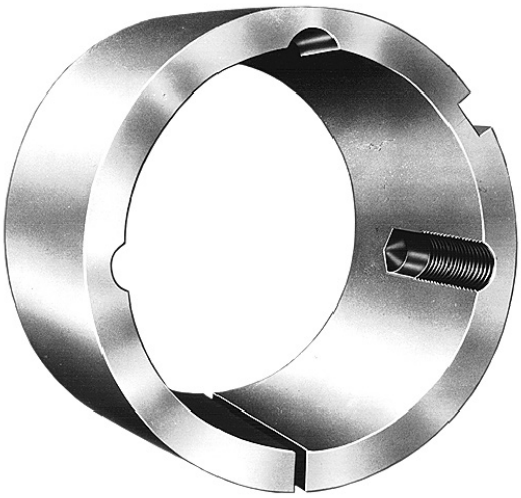

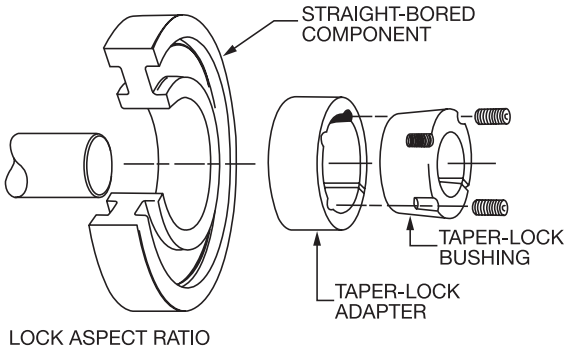

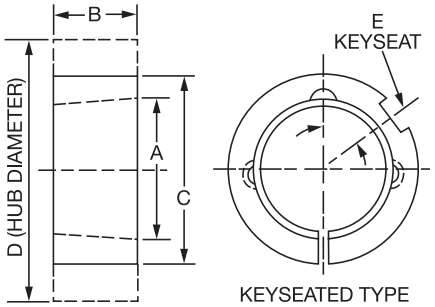

Adapters for TAPER-LOCK bushings are recommended for use where it is more convenient to straight bore than to drill, tap and taper bore hubs to accommodate bushings.

The adapter is a gray iron, taper-bored sleeve which fits into the straight bore of a hub. The bushing simply fits inside the adapter which is tapped for the bushing screws. When tightening the locking screws, adapter is expanded against the hub bore contracting the bushing tightly upon the shaft. See page PT6-3 for bushing data and wrench space required.

TAPER-LOCK Adapters

Adapter No.	Type	For Use With Bush. No.	Adapter Part No.	Adapter Wt.	A Ref.	B	C*	D: Req'd Hub Dia. †		E
								Class 30 Gray Iron	Steel	Keyseat
1215B	Keyseated	1215	**120011**	.7	1.88	1.50	2-3/8	3.38	3.25	1/4 x 1/8
1615B	Keyseated	1615	**120012**	.9	2.25	1.50	2-3/4	3.75	3.50	3/8 x 1/8
2517B	Keyseated	2517	**120013**	2.2	3.38	1.75	4-1/8	5.50	5.00	5/8 x 1/8
2525B	Keyseated	2525	**120014**	3.2	3.38	2.50	4-1/8	5.25	5.00	5/8 x 1/8
3030B	Keyseated	3030	**120015**	5.8	4.25	3.00	5-1/8	6.88	6.25	3/4 x 3/16
3535B	Keyseated	3535	**120016**	11.3	5.00	3.50	6-1/4	8.38	7.88	7/8 x 3/16
4040B	Keyseated	4040	**120017**	17.3	5.75	4.00	7-1/4	10.13	9.38	1 x 3/16
4545B	Keyseated	4545	**120018**	21.9	6.38	4.50	7-7/8	11.00	10.25	1 x 3/16

* 001 to +.003 tolerance recommended for bore of hub.

† For reference. Severe conditions may require larger hub. Heavy well located web may permit smaller hub. Hub diameter required depends on the application. Consult factory giving full information on the proposed design. Hub diameters shown are based on 30,000 and 50,000 P.S.I. minimum ultimate tensile strength respectively for Class 30 gray iron and steel hubs.

T-L FEATURES/BENEFITS PAGE PT6-2	T-L SPECIFICATION PAGE PT6-3	QD BUSHINGS PAGE PT6-16	GT BUSHINGS PAGE PT6-28

FEATURES/BENEFITS

QD Bushings

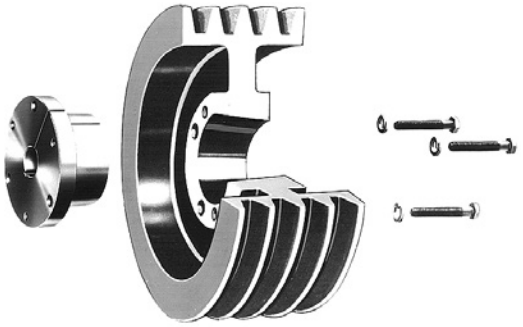

- 4 Degree Taper
- Easy on/Easy off
- Manufactured precisely to industry standards
- Conventional or Reverse Mounting, Including sizes M thru W - DODGE exclusive!
- QD is a registered trademark of Emerson Electric.

CONVENTIONAL

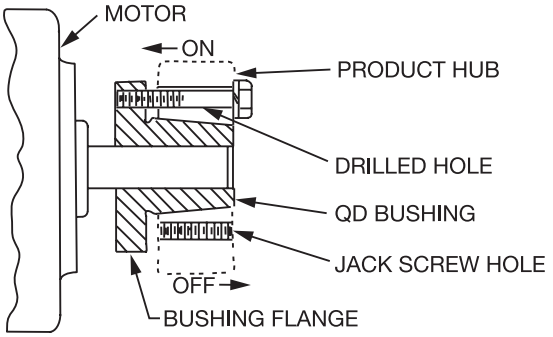

REVERSE

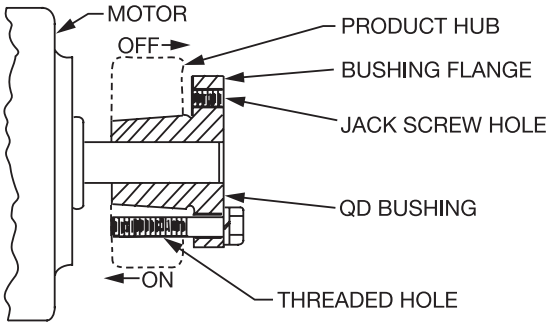

Conventional Mounting

Easy On

- Place bushing in product
- Align clearance holes in product with threaded holes in bushing
- Install screws and lockwashers thru clearance holes, finger tight
- Slide assembly onto shaft, flange first
- Locate assembly on shaft for proper drive alignment
- Tighten cap screws alternately and evenly to specified torque

Easy Off

- Remove cap screws and install in product threaded holes
- Alternately and evenly tighten screws until bushing grip is released
- Flanged Design

Reverse Mounting

Easy On

- Place bushing in product
- Align clearance holes in product with threaded holes in bushing
- Install screws and lockwashers thru clearance holes, finger tight
- Slide assembly onto shaft, flange outward
- Locate assembly on shaft for proper drive alignment
- Tighten cap screws alternately and evenly to specified torque

Easy Off

- Remove cap screws and reinstall in flange threaded holes
- Alternately and evenly tighten screws until bushing grip is released

IMPORTANT! Do not use lubricants or anti-seize compounds on tapered bore or bushing surfaces. Complete installation instructions are available at www.dodge-pt.com.

SPECIFICATION

QD Bushings - Dimensions

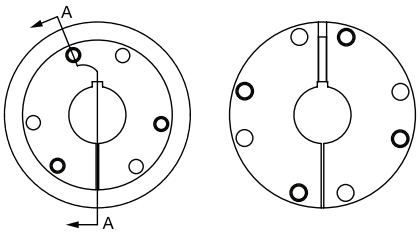

SIZE JA - J

SIZE M - W

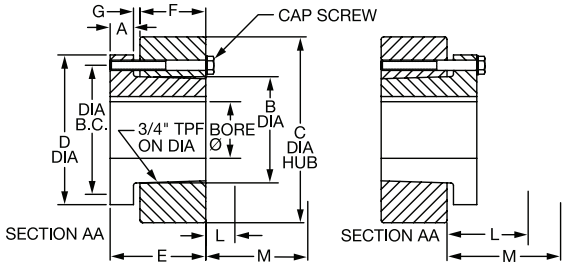

CONVENTIONAL MOUNTING

REVERSE MOUNTING

QD Bushing Ratings And Dimensions

Bush. Symb.	Ratings (Lb-in) Bush. Torque Cap.*	Bore Range				Dimensions							
		Min.	Max. Bore for:			A	B Dia.	C Hub Dia.		D Dia.	E	F	G
			Full KW	Shallow KW	No KW			CI 30 Iron	Steel				
QT / (L)	1000	3/8	1-1/4	1-1/2	1-9/16	0.35	1.63	3.00	2.375	2.50	1.35	0.94	0.12
JA	1000	1/2	1	1-3/16	1-1/4	0.31	1.38	3.93	2.25	2.00	1.00	0.56	0.12
SH	3500	1/2	1-3/8	1-5/8	1-11/16	0.38	1.88	4.75	3.00	2.63	1.25	0.81	0.12
SDS	5000	1/2	1-5/8	1-15/16	2	0.43	2.18	4.75	3.50	3.18	1.31	0.75	0.12
SD	5000	1/2	1-5/8	1-15/16	2	0.43	2.18	3.81	3.50	3.18	1.81	1.25	0.12
SK	7000	1/2	2-1/8	2-1/2	2-5/8	0.50	2.81	4.75	4.50	3.88	1.88	1.25	0.22
SF	11000	1/2	2-5/16	2-15/16	...	0.50	3.13	6.38	5.50	4.63	2.00	1.25	0.22
E	20000	7/8	2-7/8	3-1/2	...	0.75	3.83	7.50	6.50	6.00	2.63	1.63	0.25
F	30000	1	3-1/4	3-15/16	4	0.81	4.43	7.75	7.25	6.63	3.63	2.50	0.34
J	45000	1-1/2	3-3/4	4-1/2	...	1.00	5.14	9.00	8.00	7.25	4.50	3.18	0.38
M	85000	2	4-3/4	5-1/2	...	1.25	6.50	11.38	10.00	9.00	6.75	5.18	0.41
N	150000	2-7/16	5	6	...	1.50	7.00	12.00	...	10.00	8.12	6.25	0.56
P	250000	2-15/16	5-15/16	7	...	1.75	8.25	14.00	...	11.75	9.38	7.25	0.63
W	375000	4	7-1/2	8-1/2	...	2.00	10.42	17.00	...	15.00	11.38	9.00	0.50
S	625000	5-1/2	9	10	...	3.25	12.13	19.00	...	17.75	15.75	12.00	0.75

* Torque ratings apply when bushing installation screws are tightened to listed torque. Important: Do not over-torque screws. This can lead to hub damage

Installation Information

Bush. Sym.	Installation Screws				Required Wrench Clearance							
	B. C. Dia.	Qty.	Size	Screw Torque (Lb - in)	Conventional Mounting				Reverse Mounting			
					L-Install		M-Remove		L-Install		M-Remove	
					#	@	#	@	#	@	#	@
QT / (L)	2	2	1/4-20 x 7/8	90	0.41	2.53	1.13	3.25	1.13	3.25	1.56	3.68
JA	1.65	3	10-24 x 1	60	0.41	2.53	1.13	3.25	1.13	3.25	1.56	3.68
SH	2.25	3	1/4-20x 1-3/8	108	0.54	2.61	1.51	3.58	1.51	3.58	2.08	4.13
SDS	2.69	3	1/4-20 x 1-3/8	108	0.59	2.66	1.56	3.63	1.56	3.63	2.13	4.18
SD	2.69	3	1/4-20 x 1-7/8	108	0.66	2.72	2.06	4.13	2.06	4.13	2.63	4.68
SK	3.31	3	5/16-18 x 2	180	0.72	2.66	2.19	4.19	2.25	4.25	2.32	4.94
SF	3.88	3	3/8-16 x 2	360	0.78	2.78	2.25	4.23	2.30	4.30	3.19	5.18
E	5.00	3	1/2 -13 x 2-3/4	720	1.12	3.06	3.00	4.93	3.05	5.00	4.30	6.25
F	5.63	3	9/16-12 x 3-5/8	900	1.09	2.91	3.94	5.75	3.99	5.81	5.31	7.12
J	6.25	3	5/8-11 x 4-1/2	1620	1.28	3.09	4.81	6.62	3.80	5.62	5.37	7.18
M	7.88	4	3/4-10 x 6-3/4	2700	2.16	4.03	7.69	9.56	...	...	...	...
N	8.50	4	7/8-9 x 8	3600	2.28	...	9.25	...	...	...	...	...
P	10.00	4	1-8 x 9-1/2	5400	3.13	...	10.88	...	...	...	...	...
W	12.75	4	1-1/8-7 x 11-1/2	7200	3.88	...	13.38	...	...	...	...	...
S	15.00	5	1-1/4 -7x 15	9000	3.75	...	16.50	...	...	...	...	...

Using Open-End Wrench
@ Using Socket Wrench

NOTE: Installation and maintenance instructions for Dodge products available at www.dodge-pt.com

T-L FEATURES/BENEFITS PAGE PT6-2	T-L SPECIFICATION PAGE PT6-3	QD BUSHINGS PAGE PT6-16	GT BUSHINGS PAGE PT6-28

SPECIFICATION

DODGE®

Bushings For Bushed FHP Sheave - Stock Bore

QD Bush Size	BORE	P/N Keyway	WT.	Bushing Keyway	Shaft Keyway REF	Key Size REF
QT / (L)	3/8”	**121129**	0.85	None		
	7/16”	**121130**	0.82			
	1/2”	**121131**	0.81	1/8 x 1/16	1/8 x 1/16	1/8 x 1/8
	9/16”	**121133**	0.80			
	5/8”	**122050**	0.78	3/16 x 3/32	3/16 x 3/32	3/16 x 3/16
	11/16”	**121134**	0.76			
	3/4”	**121162** +	0.74			
	3/4”	**122051**	0.74			
	13/16”	**121136**	0.70			
	7/8”	**121163** +	0.68			
	7/8”	**122052**	0.68			
	15/16”	**121138**	0.66	1/4 x 1/8	1/4 x 1/8	1/4 x 1/4
	1”	**121164** +	0.62			
	1”	**122053**	0.62			
	1-1/16”	**121140**	0.59			
	1-1/8”	**121186** +	0.56			
	1-1/8”	**122054**	0.56			
	1-3/16”	**121187** +	0.52			
	1-3/16”	**122055**	0.52			
	1-1/4”	**122056**	0.49			
	1-5/16”	**121144**	0.44	5/16 x 1/16	5/16 x 5/32	5/16 x 7/32 *
	1-3/8”	**121145**	0.43			
	1-7/16”	**121146**	0.38	3/8 x 1/16	3/8 x 3/16	3/8 x 1/4 *
	1-1/2”	**121147**	0.34			
	14MM	**121148**	0.79	5 x 2.3MM	5 x 3MM	5 x 5MM
	19MM	**121149**	0.74	6 x 2.8MM	6 x 3.5MM	6 x 6MM
	20MM	**121467**	0.73			
	25MM	**121151**	0.63	8 X 3.3MM	8 X 4MM	8 X 7MM
	28MM	**151152**	0.57			
	30MM	**121153**	0.53			
	32MM	**121154**	0.50	10 x 3.3MM	10 X 5MM	10 X 8MM

P/N’s marked (+) are Integral Key Bushings
Bore sizes marked (#) will be supplied with 1/2” wide keyway unless the 5/8” wide keyway is specified when ordering
* Key furnished for these sizes ONLY
** Key not furnished for MM bores sizes

QD Bushings - Stock Bore

QD Bush Size	Bore	P/N	WT.	Bushing Keyway	Shaft Keyway REF	Key Size REF
JA	1/2”	**120332**	0.46	1/8 x 1/16	1/8 x 1/16	1/8 x 1/8
	9/16”	**120333**	0.46			
	5/8”	**120334**	0.45	3/16 x 3/32	3/16 x 3/32	3/16 x 3/16
	11/16”	**120335**	0.43			
	3/4”	**120336**	0.41			
	13/16”	**120337**	0.40			
	7/8”	**120338**	0.37			
	15/16”	**120339**	0.35	1/4 x 1/8	1/4 x 1/8	1/4 x 1/4
	1”	**120340**	0.33			
	1-1/16”	**120341**	0.34	1/4 x 1/16	1/4 x 1/8	1/4 x 3/16 *
	1-1/8”	**120342**	0.31			
	1-3/16”	**120343**	0.29			
	1-1/4”	**120344**	0.25	None		
	19MM	**117049**	0.42	6 x 2.8MM	6 x 3.5MM	6 x 6MM
	20MM	**120329**	0.41			
	22MM	**117043**	0.40			
SH	1/2”	**120345**	1.16	1/8 x 1/16	1/8 x 1/16	1/8 x 1/8
	9/16”	**120346**	1.14			
	5/8”	**120347**	1.14	3/16 x 3/32	3/16 x 3/32	3/16 x 3/16
	11/16”	**120348**	1.14			
	3/4”	**120349**	1.10			
	13/16”	**120350**	1.07			
	7/8”	**120351**	1.04			
	15/16”	**120352**	1.00	1/4 x 1/8	1/4 x 1/8	1/4 x 1/4
	1”	**120353**	0.98			
	1-1/16”	**120354**	0.94			
	1-1/8”	**120355**	0.91			
	1-3/16”	**120356**	0.88			
	1-1/4”	**120357**	0.84			
	1-5/16”	**120358**	0.82	5/16 x 5/32	5/16 x 5/32	5/16 x 5/16
	1-3/8”	**120359**	0.80			
	1-7/16”	**120360**	0.79	3/8 x 1/16	3/8 x 3/16	3/8 x 1/4 *
	1-1/2”	**120361**	0.75			
	1-9/16”	**120362**	0.90			
	1-5/8”	**120363**	0.64			
	1-11/16”	**120580**	0.55	None		
	24MM	**120088**	1.00	8 X 3.3MM	8 X 4MM	8 X 7MM
	25MM	**120089**	0.99			
	28MM	**120090**	0.93			
	30MM	**120091**	0.87			
	32MM	**120092**	0.82	10 X 3.3MM	10 X 5MM	10 X 8MM
	35MM	**120093**	0.74			
SDS	1/2”	**120388**	1.65	1/8 x 1/16	1/8 x 1/16	1/8 x 1/8
	9/16”	**120389**	1.65			
	5/8”	**120390**	1.61	3/16 x 3/32	3/16 x 3/32	3/16 x 3/16
	11/16”	**120391**	1.60			
	3/4”	**120392**	1.58			
	13/16”	**120393**	1.54			
	7/8”	**120394**	1.54			
	15/16”	**120395**	1.50	1/4 x 1/8	1/4 x 1/8	1/4 x 1/4
	1”	**120396**	1.46			
	1-1/16”	**120397**	1.43			
	1-1/8”	**120398**	1.38			
	1-3/16”	**120399**	1.36			
	1-1/4”	**120400**	1.32			
	1-5/16”	**120401**	1.26	5/16 x 5/32	5/16 x 5/32	5/16 x 5/16
	1-3/8”	**120402**	1.24			

T-L FEATURES/BENEFITS PAGE PT6-2	T-L SPECIFICATION PAGE PT6-3	QD BUSHINGS PAGE PT6-16	GT BUSHINGS PAGE PT6-28

SPECIFICATION

QD Bushings - Stock Bore

QD Bush Size	Bore	P/N	WT.	Bushing Keyway	Shaft Keyway REF	Key Size REF
SDS (cont)	1-7/16”	**120403**	1.19	3/8 x 3/16	3/8 x 3/16	3/8 x 3/8
	1-1/2”	**120404**	1.15			
	1-9/16”	**120405**	1.11			
	1-5/8”	**120406**	1.08			
	1-11/16”	**120407**	1.08	3/8 x 1/8	3/8 x 3/16	3/8 x 5/16 *
	1-3/4”	**120408**	1.02			
	1-13/16”	**120409**	0.98	1/2 x 1/16	1/2 x 1/4	1/2 x 5/16 *
	1-7/8”	**120410**	0.92			
	1-15/16”	**120411**	0.87			
	2”	**120412**	0.77	None		
	24MM	**120094**	1.47	8 X 3.3MM	8 X 4MM	8 X 7MM
	25MM	**120095**	1.47			
	28MM	**120096**	1.41			
	30MM	**120097**	1.36			
	32MM	**120098**	1.31	10 X 3.3MM	10 X 5MM	10 X 8MM
	35MM	**120099**	1.22			
	38MM	**120100**	1.00			
	40MM	**120101**	1.01	12 X 3.3MM	12 X 5MM	12 X 8MM
	42MM	**120102**	1.02			
SD	1/2”	**120364**	2.07	1/8 x 1/16	1/8 x 1/16	1/8 x 1/8
	9/16”	**120365**	2.05			
	5/8”	**120366**	2.03	3/16 x 3/32	3/16 x 3/32	3/16 x 3/16
	11/16”	**120367**	2.00			
	3/4”	**120368**	2.00			
	13/16”	**120369**	2.00			
	7/8”	**120370**	1.88			
	15/16”	**120371**	1.85	1/4 x 1/8	1/4 x 1/8	1/4 x 1/4
	1”	**120372**	1.80			
	1-1/16”	**120373**	1.79			
	1-1/8”	**120374**	1.72			
	1-3/16”	**120375**	1.67			
	1-1/4”	**120376**	1.62			
	1-5/16”	**120377**	1.55	5/16 x 5/32	5/16 x 5/32	5/16 x 5/16
	1-3/8”	**120378**	1.50			
	1-7/16”	**120379**	1.44	3/8 x 3/16	3/8 x 3/16	3/8 x 3/8
	1-1/2”	**120380**	1.36			
	1-9/16”	**120381**	1.29			
	1-5/8”	**120382**	1.29			
	1-11/16”	**120383**	1.20			
	1-3/4”	**120384**	1.19	3/8 x 1/8	3/8 x 3/16	3/8 x 5/16 *
	1-13/16”	**120385**	1.15	1/2 x 1/16	1/2 x 1/4	1/2 x 5/16 *
	1-7/8”	**120386**	1.07			
	1-15/16”	**120387**	1.00			
	2”	**120581**	0.84	None		
	24MM	**120103**	1.84	8 X 3.3MM	8 X 4MM	8 X 7MM
	25MM	**120104**	1.82			
	28MM	**120105**	1.72			
	30MM	**120106**	1.66			
	32MM	**120107**	1.58	10 X 3.3MM	10 X 5MM	10 X 8MM
	35MM	**120108**	1.49			
	38MM	**120109**	1.37			
	40MM	**120110**	1.28	12 X 3.3MM	12 X 5MM	12 X 8MM
	42MM	**120111**	1.18			

P/N's marked (+) are Integral Key Bushings
Bore sizes marked (#) will be supplied with 1/2” wide keyway unless the 5/8” wide keyway is specified when ordering
* Key furnished for these sizes ONLY
** Key not furnished for MM bores sizes

QD Bush Size	Bore	P/N	WT.	Bushing Keyway	Shaft Keyway REF	Key Size REF
SK	1/2”	**120413**	3.77	1/8 x 1/16	1/8 x 1/16	1/8 x 1/8
	9/16”	**120414**	3.74			
	5/8”	**120415**	3.72	3/16 x 3/32	3/16 x 3/32	3/16 x 3/16
	11/16”	**120416**	3.70			
	3/4”	**120417**	3.61			
	13/16”	**120418**	3.53			
	7/8”	**120419**	3.58			
	15/16”	**120420**	3.52	1/4 x 1/8	1/4 x 1/8	1/4 x 1/4
	1”	**120421**	3.45			
	1-1/16”	**120422**	3.41			
	1-1/8”	**120423**	3.37			
	1-3/16”	**120424**	3.31			
	1-1/4”	**120425**	3.31			
	1-5/16”	**120426**	3.18	5/16 x 5/32	5/16 x 5/32	5/16 x 5/16
	1-3/8”	**120427**	3.12			
	1-7/16”	**120428**	3.08	3/8 x 3/16	3/8 x 3/16	3/8 x 3/8
	1-1/2”	**120429**	3.00			
	1-9/16”	**120430**	2.95			
	1-5/8”	**120431**	2.86			
	1-11/16”	**120432**	2.79			
	1-3/4”	**120433**	2.88			
	1-13/16”	**120434**	2.62	1/2 x 1/4	1/2 x 1/4	1/2 x 1/2
	1-7/8”	**120435**	2.50			
	1-15/16”	**120436**	2.42			
	2”	**120437**	2.32			
	2-1/16”	**120438**	2.26			
	2-1/8”	**120439**	2.17			
	2-3/16”	**120440**	2.21	1/2 x 3/16	1/2 x 1/4	1/2 x 7/16 *
	2-1/4”	**120441**	2.09			
	2-5/16”	**120442**	2.00	5/8 x 1/16	5/8 x 5/16	5/8 x 3/8 *
	2-3/8”	**120443**	1.91			
	2-7/16”	**120444**	1.81			
	2-1/2”	**120445**	1.72			
	2-5/8”	**120447**	1.32	None		
	24MM	**120112**	3.52	8 X 3.3MM	8 X 4MM	8 X 7MM
	25MM	**120113**	3.50			
	28MM	**120114**	3.41			
	30MM	**120115**	3.31			
	32MM	**120116**	3.31	10 X 3.3MM	10 X 5MM	10 X 8MM
	35MM	**120117**	3.12			
	38MM	**120118**	2.98			
	40MM	**120119**	2.95	12 X 3.3MM	12 X 5MM	12 X 8MM
	42MM	**120120**	2.86			
	45MM	**120070**	2.69	14 X 3.8MM	14 X 5.5MM	14 X 9MM
	48MM	**120121**	2.50			
	50MM	**120122**	2.40			
	55MM	**120123**	2.17	16 X 4.3MM	16 X 6MM	16 X 10MM
SF	1/2”	**120448**	5.27	1/8 x 1/4	1/8 x 1/4	1/8 x 1/8
	9/16”	**120449**	5.27			
	5/8”	**120450**	5.22	3/16 x 3/32	3/16 x 3/32	3/16 x 3/16
	11/16”	**120451**	5.20			
	3/4”	**120452**	5.17			
	13/16”	**120453**	5.32			
	7/8”	**120454**	5.08			
	15/16”	**120455**	5.05	1/4 x 1/8	1/4 x 1/8	1/4 x 1/4
	1”	**120456**	5.00			
	1-1/16”	**120457**	4.95			
	1-1/8”	**120458**	4.90			
	1-3/16”	**120459**	4.83			
	1-1/4”	**120460**	4.77			

T-L FEATURES/BENEFITS PAGE PT6-2	T-L SPECIFICATION PAGE PT6-3	QD BUSHINGS PAGE PT6-16	GT BUSHINGS PAGE PT6-28

PT Component Quick References
Couplings
Clutches and Brakes
FLEXIDYNE
Fluid Couplings
TORQUE-TAMER
Bushings

SPECIFICATION

QD Bushings - Stock Bore

QD Bush Size	Bore	P/N	WT.	Bushing Keyway	Shaft Keyway REF	Key Size REF
SF (cont)	1-5/16”	**120461**	4.71	5/16 x 5/32	5/16 x 5/32	5/16 x 5/16
	1-3/8”	**120462**	4.61			
	1-7/16”	**120463**	4.57	3/8 x 3/16	3/8 x 3/16	3/8 x 3/8
	1-1/2”	**120464**	4.48			
	1-9/16”	**120465**	4.42			
	1-5/8”	**120466**	4.32			
	1-11/16”	**120467**	4.31			
	1-3/4”	**120468**	4.16			
	1-13/16”	**120469**	4.06	1/2 x 1/4	1/2 x 1/4	1/2 x 1/2
	1-7/8”	**120470**	4.00			
	1-15/16”	**120471**	3.87			
	2”	**120472**	3.78			
	2-1/16”	**120473**	3.70			
	2-1/8”	**120474**	3.57			
	2-3/16”	**120475**	3.45			
	2-1/4”	**120476**	3.38			
	2-5/16”	**120477**	3.32	5/8 x 5/16	5/8 x 5/16	5/8 x 5/8
	2-3/8”	**120478**	3.39	5/8 x 3/16	5/8 x 5/16	5/8 x 1/2 *
	2-7/16”	**120479**	3.26			
	2-1/2”	**120592**	3.16			
	2-5/8”	**120482**	2.91	5/8 x 1/16	5/8 x 5/16	5/8 x 3/8 *
	2-11/16”	**120483**	2.80			
	2-3/4”	**120484**	2.59			
	2-13/16”	**120485**	2.50	3/4 x 1/16	3/4 x 3/8	3/4 x 7/16 *
	2-7/8”	**120486**	2.35	3/4 x 1/32	3/4 x 3/8	3/4 x 13/32 *
	2-15/16”	**120487**	2.22			
	28MM	**120124**	5.00	8 X 3.3MM	8 X 4MM	8 X 7MM
	30MM	**120125**	4.90			
	32MM	**120126**	4.77	10 X 3.3MM	10 X 5MM	10 X 8MM
	35MM	**120127**	4.61			
	38MM	**120128**	4.48			
	40MM	**120129**	4.42	12 X 3.3MM	12 X 5MM	12 X 8MM
	42MM	**120130**	4.32			
	45MM	**120071**	4.16	14 X 3.8MM	14 X 5.5MM	14 X 9MM
	48MM	**120131**	4.00			
	50MM	**120132**	3.87			
	55MM	**120133**	3.57	16 X 4.3MM	16 X 6MM	16 X 10MM
	60MM	**120134**	3.39	18 X 4.4MM	18 X 7MM	18 X 11MM
E	7/8”	**120488**	11.80	3/16 x 3/32	3/16 x 3/32	3/16 x 3/16
	1”	**120490**	11.65	1/4 x 1/8	1/4 x 1/8	1/4 x 1/4
	1-1/8”	**120492**	11.46			
	1-3/16”	**120493**	11.40			
	1-1/4”	**120494**	11.33			
	1-5/16”	**120495**	11.26	5/16 x 5/32	5/16 x 5/32	5/16 x 5/16
	1-3/8”	**120496**	11.20			
	1-7/16”	**120497**	11.13	3/8 x 3/16	3/8 x 3/16	3/8 x 3/8
	1-1/2”	**120498**	10.86			
	1-9/16”	**120499**	10.82			
	1-5/8”	**120500**	10.69			
	1-11/16”	**120501**	10.56			
	1-3/4”	**120502**	10.46			

QD Bush Size	Bore	P/N	WT.	Bushing Keyway	Shaft Keyway REF	Key Size REF
E (cont)	1-13/16”	**120503**	10.16	1/2 x 1/4	1/2 x 1/4	1/2 x 1/2
	1-7/8”	**120504**	10.16			
	1-15/16”	**120505**	10.16			
	2”	**120506**	10.01			
	2-1/16”	**120507**	9.85			
	2-1/8”	**120508**	9.73			
	2-3/16”	**120509**	9.42			
	2-1/4”	**120510**	9.42			
	2-5/16”	**120511**	9.07	5/8 x 5/16	5/8 x 5/16	5/8 x 5/8
	2-3/8”	**120512**	8.95			
	2-7/16”	**120513**	8.77			
	2-1/2”	**120514**	8.72			
	2-5/8”	**120516**	8.37			
	2-11/16”	**120517**	8.05			
	2-3/4”	**120518**	7.90			
	2-13/16”	**120519**	7.70	3/4 x 3/8	3/4 x 3/8	3/4 x 3/4
	2-7/8”	**120520**	7.32			
	2-15/16”	**120521**	7.53	3/4 x 1/8	3/4 x 3/8	3/4 x 1/2 *
	3”	**120522**	7.31			
	3-1/8”	**120524**	6.90			
	3-3/16”	**120525**	6.69			
	3-1/4”	**120526**	6.48			
	3-5/16”	**120527**	6.10	7/8 x 1/8	7/8 x 7/16	7/8 x 9/16 *
	3-3/8”	**120528**	6.21	7/8 x 1/16	7/8 x 7/16	7/8 x 1/2 *
	3-7/16”	**120529**	5.86			
	3-1/2”	**120530**	5.73			
	28MM	**120073**	10.20	8 X 3.3MM	8 X 4MM	8 X 7MM
	30MM	**120074**	10.20			
	32MM	**120075**	10.20	10 X 3.3MM	10 X 5MM	10 X 8MM
	35MM	**120135**	10.20			
	38MM	**120136**	10.00			
	40MM	**120137**	10.88	12 X 3.3MM	12 X 5MM	12 X 8MM
	42MM	**120138**	9.80			
	45MM	**120141**	9.60	14 X 3.8MM	14 X 5.5MM	14 X 9MM
	48MM	**120139**	10.26			
	50MM	**120140**	10.06			
	55MM	**120142**	9.56	16 X 4.3MM	16 X 6MM	16 X 10MM
	60MM	**120143**	9.10	18 X 4.4MM	18 X 7MM	18 X 11MM
	65MM	**120144**	9.60			
	70MM	**120145**	7.87	20 X 4.9MM	20 x 7.5MM	20 X 12MM
	75MM	**120146**	7.28			
F	1”	**120531**	19.41	1/4 x 1/8	1/4 x 1/8	1/4 x 1/4
	1-1/8”	**120533**	19.15			
	1-3/16”	**120534**	18.00			
	1-1/4”	**120535**	18.99			
	1-3/8”	**120537**	18.68	5/16 x 5/32	5/16 x 5/32	5/16 x 5/16
	1-7/16”	**120538**	18.56	3/8 x 3/16	3/8 x 3/16	3/8 x 3/8
	1-1/2”	**120539**	18.48			
	1-9/16”	**120540**	18.40			
	1-5/8”	**120541**	18.15			
	1-11/16”	**120542**	17.91			
	1-3/4”	**120543**	16.77			
	1-13/16”	**120544**	17.62	1/2 x 1/4	1/2 x 1/4	1/2 x 1/2
	1-7/8”	**120545**	16.41			
	1-15/16”	**120546**	16.00			
	2”	**120547**	16.00			
	2-1/16”	**120548**	16.00			
	2-1/8”	**120549**	15.95			
	2-3/16”	**120550**	15.95			
	2-1/4”	**120551**	15.95			

P/N’s marked (+) are Integral Key Bushings
Bore sizes marked (#) will be supplied with 1/2” wide keyway unless the 5/8” wide keyway is specified when ordering
* Key furnished for these sizes ONLY
** Key not furnished for MM bores sizes

T-L FEATURES/BENEFITS PAGE PT6-2	T-L SPECIFICATION PAGE PT6-3	QD BUSHINGS PAGE PT6-16	GT BUSHINGS PAGE PT6-28

SPECIFICATION

QD Bushings - Stock Bore

QD Bush Size	Bore	P/N	WT.	Bushing Keyway	Shaft Keyway REF	Key Size REF
F (cont)	2-5/16”	**120552**	15.95	5/8 x 5/16	5/8 x 5/16	5/8 x 5/8
	2-3/8”	**120553**	15.50			
	2-7/16”	**120554**	15.50			
	2-1/2”	**120555**	15.37			
	2-5/8”	**120557**	14.86			
	2-11/16”	**120558**	14.50			
	2-3/4”	**120559**	14.37			
	2-13/16”	**120560**	14.00	3/4 x 3/8	3/4 x 3/8	3/4 x 3/4
	2-7/8”	**120561**	14.02			
	2-15/16”	**120562**	13.47			
	3”	**120563**	13.20			
	3-1/8”	**120565**	12.67			
	3-3/16”	**120566**	12.50			
	3-1/4”	**120567**	12.00			
	3-3/8”	**120569**	12.00	7/8 x 3/16	7/8 x 7/16	7/8 x 5/8 *
	3-7/16”	**120570**	11.88			
	3-1/2”	**120571**	11.40			
	3-5/8”	**120573**	10.53			
	3-11/16”	**120574**	14.00			
	3-3/4”	**120575**	9.89			
	3-7/8”	**120577**	9.26	1 x 1/8	1 x 1/2	1 x 5/8 *
	3-15/16”	**120578**	9.23			
	4”	**120579**	7.96	None		
	45MM	**120076**	16.20	14 X 3.8MM	14 X 5.5MM	14 X 9MM
	48MM	**120147**	16.00			
	50MM	**120148**	15.80			
	55MM	**120149**	15.80	16 X 4.3MM	16 X 6MM	16 X 10MM
	60MM	**120150**	15.80	18 X 4.4MM	18 X 7MM	18 X 11MM
	65MM	**120151**	14.30			
	70MM	**120152**	14.30	20 X 4.9MM	20 x 7.5MM	20 X 12MM
	75MM	**120153**	13.50			
	80MM	**120154**	12.55	22 X 5.4MM	22 X 9MM	22 X 14MM
	85MM	**120155**	10.60			
	90MM	**120077**	10.50	25 X 5.4MM	25 X 9MM	25 X 14MM
J	1-1/2”	**120600**	28.97	3/8 x 3/16	3/8 x 3/16	3/8 x 3/8
	1-5/8”	**120601**	28.61			
	1-3/4”	**120603**	28.28			
	1-7/8”	**120604**	27.79	1/2 x 1/4	1/2 x 1/4	1/2 x 1/2
	1-15/16”	**120605**	27.53			
	2”	**120606**	27.33			
	2-1/8”	**120607**	26.74			
	2-3/16”	**120608**	26.37			
	2-1/4”	**120609**	26.32			
	2-3/8”	**120610**	25.65	5/8 x 5/16	5/8 x 5/16	5/8 x 5/8
	2-7/16”	**120611**	25.52			
	2-1/2”	**120612**	25.05			
	2-5/8”	**120613**	24.50			
	2-11/16”	**120614**	24.18			
	2-3/4”	**120615**	23.86			

QD Bush Size	Bore	P/N	WT.	Bushing Keyway	Shaft Keyway REF	Key Size REF
J (cont)	2-7/8”	**120617**	23.15	3/4 x 3/8	3/4 x 3/8	3/4 x 3/4
	2-15/16”	**120618**	23.07			
	3”	**120619**	22.43			
	3-1/8”	**120620**	21.68			
	3-3/16”	**120621**	21.35			
	3-1/4”	**120622**	20.98			
	3-3/8”	**120623**	20.33	7/8 x 7/16	7/8 x 7/16	7/8 x 7/8
	3-7/16”	**120624**	21.13			
	3-1/2”	**120625**	19.58			
	3-5/8”	**120626**	18.44			
	3-11/16”	**120627**	18.04			
	3-3/4”	**120628**	17.62			
	3-7/8”	**120629**	17.94	1 x 1/8	1 x 1/2	1 x 5/8 *
	3-15/16”	**120630**	17.38			
	4”	**120631**	16.62			
	4-1/8”	**120632**	15.69			
	4-3/16”	**120633**	14.55			
	4-1/4”	**120634**	14.68			
	4-3/8”	**120635**	14.00			
	4-7/16”	**120636**	13.49			
	4-1/2”	**120637**	12.67			
	50MM	**120157**	26.50	14 X 3.8MM	14 X 5.5MM	14 X 9MM
	55MM	**120158**	25.60	16 X 4.3MM	16 X 6MM	16 X 10MM
	60MM	**120159**	25.82	18 X 4.4MM	18 X 7MM	18 X 11MM
	65MM	**120160**	25.25			
	70MM	**120161**	24.04	20 X 4.9MM	20 x 7.5MM	20 X 12MM
	75MM	**120162**	21.90			
	80MM	**120163**	20.90	22 X 5.4MM	22 X 9MM	22 X 14MM
	85MM	**120164**	20.52			
	90MM	**120165**	18.10	25 X 5.4MM	25 X 9MM	25 X 14MM
	95MM	**120166**	16.80			
	100MM	**120167**	16.50	26 X 6.4MM	28 X 10MM	28 X 16MM
M	2”	**119900**	62.65	1/2 x 1/4	1/2 x 1/4	1/2 x 1/2
	2-1/8”	**119901**	62.65			
	2-3/16”	**119902**	61.58			
	2-1/4”	**119903**	61.14			
	2-3/8”	**119904**	59.50	5/8 x 5/16	5/8 x 5/16	5/8 x 5/8
	2-7/16”	**119905**	59.35			
	2-1/2”	**119906**	59.21			
	2-5/8”	**119907**	58.69			
	2-3/4”	**119908**	57.86			
	2-7/8”	**119909**	56.57	3/4 x 3/8	3/4 x 3/8	3/4 x 3/4
	2-15/16”	**119910**	56.17			
	3”	**119911**	56.10			
	3-1/8”	**119912**	55.82			
	3-3/16”	**119913**	53.84			
	3-1/4”	**119914**	53.42			
	3-3/8”	**119915**	52.06	7/8 x 7/16	7/8 x 7/16	7/8 x 7/8
	3-7/16”	**119916**	52.04			
	3-1/2”	**119917**	51.12			
	3-5/8”	**119918**	50.08			
	3-11/16”	**119919**	49.00			
	3-3/4”	**119920**	48.47			
	3-7/8”	**119921**	47.03	1 x 1/2	1 x 1/2	1 x 1
	3-15/16”	**119922**	46.26			
	4”	**119923**	46.09			
	4-1/8”	**119924**	44.31			
	4-3/16”	**119925**	43.64			
	4-1/4”	**119926**	42.81			

P/N's marked (+) are Integral Key Bushings
Bore sizes marked (#) will be supplied with 1/2” wide keyway unless the 5/8” wide keyway is specified when ordering
* Key furnished for these sizes ONLY
** Key not furnished for MM bores sizes

T-L FEATURES/BENEFITS PAGE PT6-2	T-L SPECIFICATION PAGE PT6-3	QD BUSHINGS PAGE PT6-16	GT BUSHINGS PAGE PT6-28

SPECIFICATION

QD Bushings - Stock Bore

QD Bush Size	Bore	P/N	WT.	Bushing Keyway	Shaft Keyway REF	Key Size REF
M (cont)	4-3/8”	**119927**	41.46	1 x 1/2	1 x 1/2	1 x 1
	4-7/16”	**119928**	40.60			
	4-1/2”	**119929**	40.27			
	4-11/16”	**119930**	37.12	1-1/4 x 5/8	1-1/4 x 5/8	1-1/4 x 1-1/4
	4-3/4”	**119931**	37.00			
	4-7/8”	**119932**	36.89	1-1/4 x 1/4	1-1/4 x 5/8	1-1/4 x 7/8 *
	4-15/16”	**119933**	36.13			
	5”	**119934**	35.66			
	5-1/8”	**119899**	35.00			
	5-3/16”	**119894**	35.00			
	5-1/4”	**119935**	30.00			
	5-7/16”	**119936**	30.00			
	5-1/2”	**119937**	29.00			
N	2-7/16”	**119940**	87.57	5/8 x 5/16	5/8 x 5/16	5/8 x 5/8
	2-15/16”	**119941**	83.00	3/4 x 3/8	3/4 x 3/8	3/4 x 3/4
	3-7/16”	**119942**	80.00	7/8 x 7/16	7/8 x 7/16	7/8 x 7/8
	3-1/2”	**119980**	80.00			
	3-3/4”	**119943**	80.00			
	3-7/8”	**119944**	80.00	1 x 1/2	1 x 1/2	1 x 1
	3-15/16”	**119945**	80.00			
	4”	**119946**	80.00			
	4-3/16”	**119947**	80.00			
	4-1/4”	**119948**	80.00			
	4-3/8”	**119982**	79.00			
	4-7/16”	**119949**	78.00			
	4-1/2”	**119950**	77.00			
	4-11/16”	**119983**	76.00	1-1/4 x 5/8	1-1/4 x 5/8	1-1/4 x 1-1/4
	4-3/4”	**119951**	75.00			
	4-7/8”	**119952**	74.00			
	4-15/16”	**119953**	73.00			
	5”	**119954**	72.00			
	5-1/8”	**119955**	71.00	1-1/4 x 1/4	1-1/4 x 5/8	1-1/4 x 7/8 *
	5-3/16”	**119986**	70.50			
	5-1/4”	**119956**	70.00			
	5-7/16”	**119957**	52.19			
	5-1/2”	**119958**	49.02			
	5-3/4”	**119959**	49.00	1-1/2 x 1/8	1-1/2 x 3/4	1-1/2 x 7/8 *
	5-7/8”	**119960**	44.00			
	5-15/16”	**119961**	43.00			
	6”	**119962**	42.00			

QD Bush Size	Bore	P/N	WT.	Bushing Keyway	Shaft Keyway REF	Key Size REF
P	3-7/16”	**119965**	134.00	7/8 x 7/16	7/8 x 7/16	7/8 x 7/8
	3-15/16”	**119966**	122.00	1 x 1/2	1 x 1/2	1 x 1
	4”	**119987**	122.00			
	4-7/16”	**119967**	122.40			
	4-1/2”	**119968**	121.00			
	4-3/4”	**119969**	120.00	1-1/4 x 5/8	1-1/4 x 5/8	1-1/4 x 1-1/4
	4-7/8”	**119985**	120.00			
	4-15/16”	**119970**	119.00			
	5”	**119971**	115.00			
	5-3/16”	**119984**	114.00			
	5-7/16”	**119972**	113.00			
	5-1/2”	**119973**	100.00			
	5-15/16”	**119974**	94.00			
	6”	**119975**	93.70	1-1/2 x 1/4	1-1/2 x 3/4	1-1/2 x 1 *
	6-7/16”	**119976**	83.50			
	6-1/2”	**119977**	80.50			
	7”	**119978**	68.00	1-3/4 x 1/8	1-3/4 x 3/4	1-3/4 x 7/8 *
W	4-1/4”	**120180**	260.00	1 x 1/2	1 x 1/2	1 x 1
	4-7/16”	**120181**	256.60			
	4-1/2”	**120182**	255.40			
	4-3/4”	**120183**	250.00	1-1/4 x 5/8	1-1/4 x 5/8	1-1/4 x 1-1/4
	5”	**120186**	244.30			
	5-3/8”	**120188**	235.30			
	5-1/2”	**120189**	232.20			
	5-3/4”	**120190**	225.70	1-1/2 x 3/4	1-1/2 x 3/4	1-1/2 x 1-1/2
	5-7/8”	**120191**	222.30			
	5-15/16”	**120192**	220.00			
	6”	**120193**	218.90			
	6-1/2”	**120194**	215.00			
	6-3/4”	**120328**	210.00	1-3/4 x 3/4	1-3/4 x 3/4	1-3/4 x 1-1/2
	7”	**120196**	184.90			
	7-1/4”	**120197**	184.40			
	7-1/2”	**120198**	175.80			
	7-3/4”	**120199**	172.00	2 x 1/4	2 x 3/4	2 x 1 *
	8”	**120200**	159.70			
S	▼ Bushings size available please call Dodge for information					

P/N’s marked (+) are Integral Key Bushings
Bore sizes marked (#) will be supplied with 1/2” wide keyway unless the 5/8” wide keyway is specified when ordering
* Key furnished for these sizes ONLY
** Key not furnished for MM bores sizes

T-L FEATURES/BENEFITS PAGE PT6-2	T-L SPECIFICATION PAGE PT6-3	QD BUSHINGS PAGE PT6-16	GT BUSHINGS PAGE PT6-28

SPECIFICATION

QD Reborable

QD Bush Size	Sintered Steel		Cast Iron		Ductile Iron	
	Bore	P/N	Bore	P/N	Bore	P/N
QT (L)	3/8”	**120595**				
JA	1/2”	**120050**				
SH	1/2”	**120051**			1/2”	**119876**
SDS	1/2”	**120052**			1-7/16”	**119877**
SD	1/2”	**120053**			1-9/16”	**119878**
SK	1/2”	**120054**			2”	**119879**
SF	1/2”	**120055**			2-5/16”	**119880**
E			7/8”	**120056**	7/8”	**119881**
F			1”	**120057**	1”	**119882**
J			1-1/2”	**120058**	1-1/2”	**119883**
M			2”	**119938**	2”	**119884**
N			2-7/16”	**119963**	2-7/16”	**119885**
P			3-7/16”	**119979**	3-7/16”	**119886**
W			4”	**120276**		
S			5-1/2”	**394059**		

NOTE: All reborable bushings are stocked without sawsplit to facilitate re-maching. Sawsplit must be made in bushing to allow it to compress for proper gripping of the shaft. Factory rebore and keyseat service as listed in MLP price book includes sawsplit.

QD - Maximum Bore Capacities

QD Bush Size	Sintered Steel			Cast Iron			Ductile Iron			
	Full Key	Shallow Key	Metric	Full Key	Shallow Key	Metric	Full Key	Shallow Key	No Key*	Metric
QT (L)										
JA	1”	1-1/16”	25				1”	1-3/16”	1-1/4”	25
SH	1-1/4”	1-1/4”	30				1-3/8”	1-5/8”	1-11/16”	35
SDS	1-9/16”	1-5/8”	40				1-5/8”	1-15/16”	2”	42
SD	1-9/16”	1-9/16”	40				1-11/16”	1-15/16”	2”	42
SK	2”	2-1/16”	50				2-1/2”	2-1/2”	2-5/8”	55
SF	2-1/4”	2-3/8”	55				2-5/16”	2-15/16”	2-15/16”	65
E				2-3/4”	3”	70	2-7/8”	3-1/2”	3-1/2”	89
F				3-1/4”	3-7/16”	90	3-1/4”	3-15/16”	4”	101
J				3-3/4”	3-7/8”	100	3-3/4”	4-1/2”	4-1/2”	114
M				4-3/4”	5”	120	4-3/4”	5-1/2”	5-1/2”	139
N				5”	5-1/4”	130	5”	6”	6”	149
P				5-1/2”	7”	160	5-1/2”	7”	7”	177
W				6-1/2”	7”	165	6-1/2”	8-1/2”	8-1/2”	216
S				8-1/4”	8-1/4”	209	8-1/4	10”	10”	250

NOTE: ISO STANDARD METHOD FOR MEASURING KEYSEAT DEPTH
MM Bore and Keyway dimensions conform to ISO standard recommendation R773, for “Free” fit

REFERENCE:
1 inch = 25.4 millimeters
1 millimeter = .03937 inches

* Verify torque capacity: Contact Application Engineering for assistance

PT Component Quick References
Couplings
Clutches and Brakes
FLEXIDYNE
Fluid Couplings
TORQUE-TAMER
Bushings

SPECIFICATION

QD Bushing - Metric Bore/Metric Hardware

FEATURES

- ✦ DODGE QD-style bushings stocked in popular finish bore sizes and minimum plain bore, for custom reboring
- ✦ DODGE Metric QD bushings supplied with metric hex-head cap screws and lock washers
- ✦ Stock reborable bushings available for custom reboring
- ✦ Reboring and sawsplit available from DODGE for nominal extra charge
  NOTE: Rebore by others must be sawsplit after rebore
- ✦ Can be used with DODGE HTD sprockets for conventional mounting only *(English thread hardware required for demounting.)*

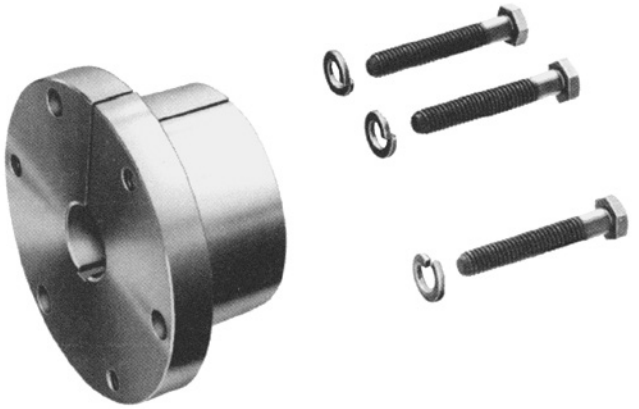

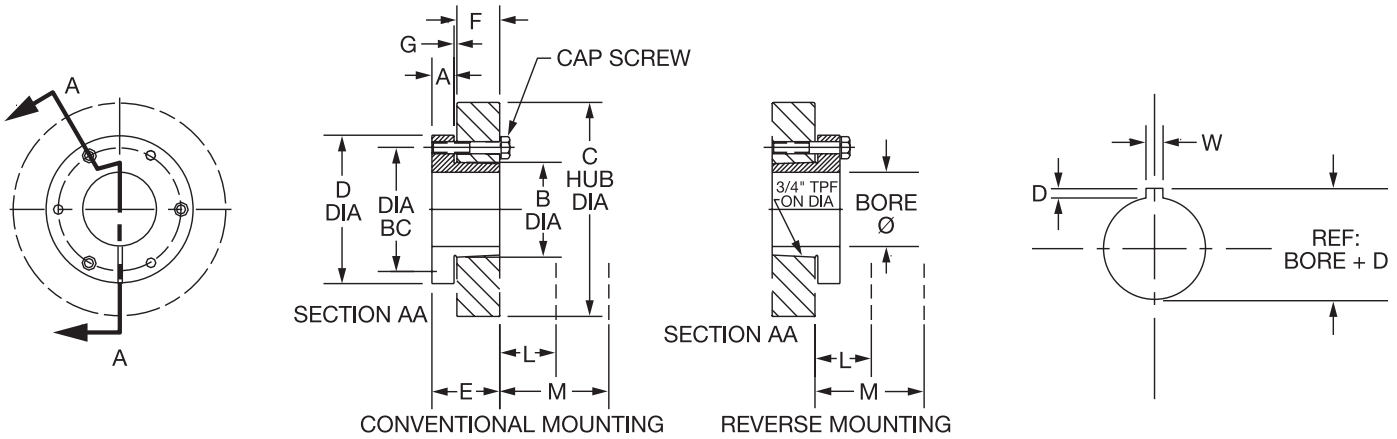

SPECIFICATION

QD Bushing - Metric Bore/Metric Hardware

Stock Reborable Bushings & Specifications

Bush Sym	Ductile Iron			Dimensions (MM)							
	Part No.	Max Bore	Stock Bore	A MM	B MM	C Hub Dia Iron	C Hub Dia Steel	D MM	E MM	F MM	G MM
QT / (L)	**119861**	35	10.00	6.40	41.40	76.20	69.90	63.50	33.30	22.20	4.80
JA	**119860**	25	12.70	7.90	35.10	99.80	57.20	50.80	25.40	14.20	3.10
SH	**119862**	36	12.70	10.90	47.80	120.70	76.20	66.80	33.30	20.60	3.10
SDS	**119863**	42	36.51	10.90	55.40	120.70	88.90	80.80	33.30	19.10	3.10
SD	**119864**	42	39.69	10.90	55.40	96.80	88.90	80.80	46.00	31.80	3.10
SK	**119865**	55	50.80	14.20	71.40	120.70	114.30	98.60	49.00	31.80	5.60
SF	**119866**	60	58.74	16.00	79.50	162.10	139.70	117.60	52.30	31.80	5.60
E	**119867**	82	22.20	22.40	97.30	190.50	165.10	152.40	69.90	41.40	6.40
F	**119868**	92	25.40	25.40	115.50	196.90	184.20	168.40	95.30	63.50	8.60
J	**119869**	104	38.10	28.70	130.60	228.60	203.20	184.20	117.60	80.80	9.70
M	**119870**	130	50.80	31.80	165.10	289.10	254.00	228.60	171.50	131.60	10.40

Bushing			Bolt			
Type	Torque Capacity (Nm)	Center Dia (mm)	Qty	Length (mm)	Size	Bolt Torque (Nm)
QT / (L)	113	50.8	2	22	M6 x 1	9.6
JA	113	42.3	3	25	M5 x 0.8	5.6
SH	395	57.2	3	35	M6 x 1	11.5
SDS	565	68.3	3	35	M6 x 1	11.5
SD	565	68.3	3	50	M6 x 1	11.5
SK	781	84.1	3	50	M8 x 1.25	20.5
SF	1243	98.4	3	50	M10 x 1.5	34.0
E	2260	127.0	3	70	M12 x 1.75	77.0
F	3390	142.9	3	100	M14 x 2	100.0
J	5085	158.8	3	120	M16 x 2	194.5
M	9600	200.0	4	180	M20 x 2.5	256.0

QD Bushing - Metric Series

Metric QD Bushing - Metric Hardware

MM Bore	Bushing No.									MM Keyway	
	QT / (L)	JA	SH	SDS	SD	SK	SF	E	F	W	D
14	-----	**117377**	-----	-----	-----	-----	-----	-----	-----	5	2.30
19	-----	**117371**	-----	-----	-----	-----	-----	-----	-----	6	2.80
20	-----	**117372**	**117378**	**117385**	-----	-----	-----	-----	-----	6	2.80
24	-----	**117373**	**117379**	**117386**	**117531**	**117540**	-----	-----	-----	8	3.30
25	**117356**	**117374***	**117380**	**117387**	**117532**	**117541**	**117553**	-----	-----	8	3.30
28	-----	-----	**117381**	**117388**	**117533**	**117542**	**117554**	-----	-----	8	3.30
30	**117357**	-----	**117382**	**117389**	**117534**	**117543**	**117555**	-----	-----	8	3.30
32	**117358***	-----	**117383***	**117390**	**117535**	**117544**	**117556**	-----	-----	10	3.30
35	-----	-----	**117384***	**117391**	**117536**	**117545**	**117557**	-----	-----	10	3.30
38	-----	-----	-----	**117392**	**117537**	**117546**	**117558**	-----	-----	10	3.30
40	-----	-----	-----	**117393**	**117538**	**117547**	**117559**	**117571***	**117583***	12	3.30
42	-----	-----	-----	**117394***	**117539***	**117548**	**117560**	-----	**117584***	12	3.30
45	-----	-----	-----	-----	-----	**117549**	**117561**	-----	-----	14	3.80
48	-----	-----	-----	-----	-----	**117550**	**117562**	-----	-----	14	3.80
50	-----	-----	-----	-----	-----	**117551**	**117563**	**117575***	**117587***	14	3.80
55	-----	-----	-----	-----	-----	**117552***	**117564**	**117576***	**117588***	16	4.30
60	-----	-----	-----	-----	-----	-----	**117565***	-----	**117589***	18	4.40

Part Numbers marked (*) are Ductile Iron

PT Component Quick References
Couplings
Clutches and Brakes
FLEXIDYNE
Fluid Couplings
TORQUE-TAMER
Bushings

SPECIFICATION

QD Hubs

DODGE QD Weld-On hubs are useful for welding into fan rotors, pulleys, plate sprockets, impellers, agitators, etc. which require secure mounting to the shaft. These hubs are made of low carbon steel for good welding compatibility. The data tabulation shows the standard QD bushings that are used with these hubs.

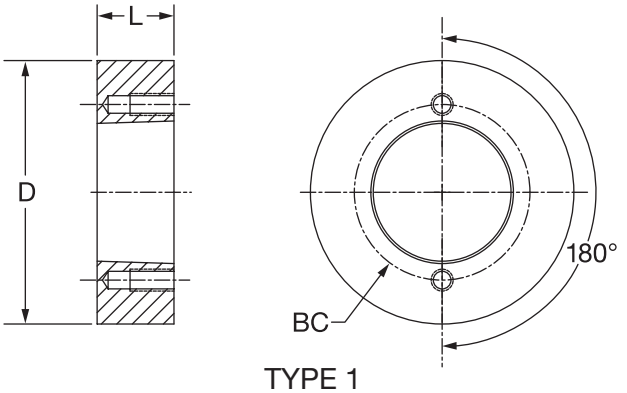

TYPE 1

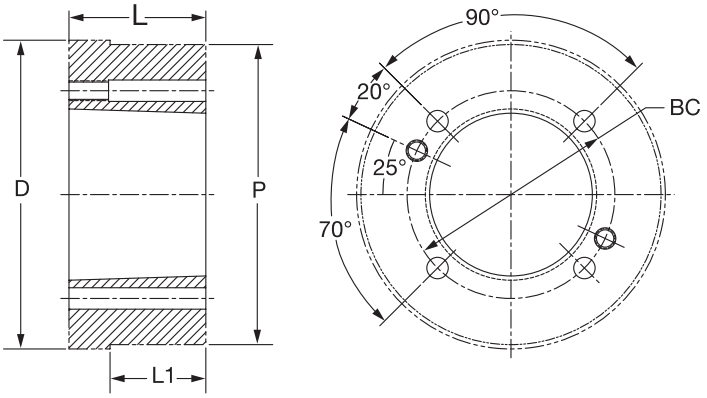

TYPE 3

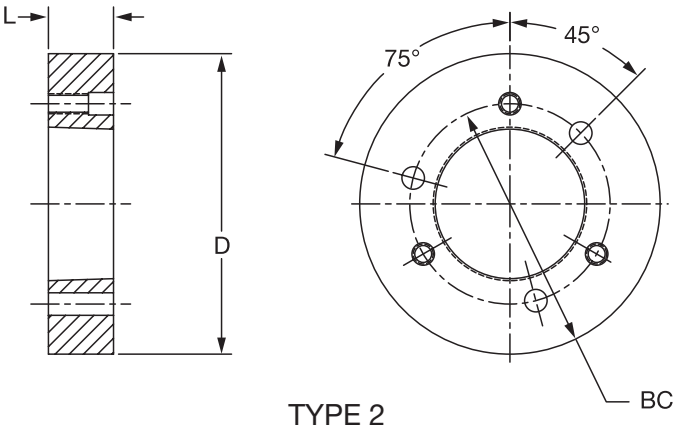

TYPE 2

Hub No.	Part No.	For Bush	Bore Range	Wt. Lbs.	Type	Dimensions					
						D*	L	BC	P	L1	Thread Size
QT-A	**228465**	QT	3/8 to 1-1/2”	0.6	1	2.375	0.88	2.00	2.50	0.17	1/4-20 NC x 3/4
JA-A	**228466**	JA	1/2 to 1-1/4”	0.4	2	2.250	0.56	1.66	....	....	10-24 NC x 1
SH-A	**228467**	SH	1/2 to 1-11/16”	1.0	2	3.000	0.81	2.25	....	....	1/4-20 NC x 1-3/8
SDS-A	**228468**	SDS	1/2 to 2”	1.3	2	3.500	0.75	2.6	....	....	1/4-20 NC x 1-3/8
SK-A	**228469**	SK	1/2 to 2-5/8”	3.0	2	4.375	1.25	3.31	....	....	5/16-18 NC x 2
SF-A	**228470**	SF	1/2 to 2-15/16”	4.0	2	5.000	1.25	3.88	....	....	3/8-16 NC x 2
E-A	**228471**	E	7/8 to 3-1/2”	9.0	2	6.250	1.63	5.00	....	....	1/2-13 NC x 2-3/4
F-A	**228472**	F	1 to 4”	16.0	2	7.000	2.50	5.63	....	....	9/16-12 NC x 3-5/8
J-A	**228473**	J	1-1/2 to 4-1/2”	22.5	2	7.750	3.19	6.25	....	....	5/8-11 NC x 4-1/2
M-A	**228474**	M	2 to 5-1/2”	50.0	3	9.250	5.19	7.88	9.50	3.56	3/4-10 NC x 6-3/4
N-A	**228475**	N	2-7/16 to 5-7/8”	75.0	3	10.250	6.25	8.50	10.50	4.50	7/8-9 NC x 8
P-A	**228476**	P	2-15/16 to 7”	155.0	2	13.000	7.25	10.00	....	....	1-8 NC x 9-1/2
W-A	**228477**	W	4 to 8-1/2”	300.0	2	15.500	9.00	12.75	....	....	1-1/16-7 NC x 11/12

Mounting:

Type 1: Reverse only
Type 2: Conventional or Reverse
Type 3: Conventional Only

* Tolerance:

QT-A Thru J-A = (+0.000”/-0.002”)
M-A Thru W-A = (+0.000”/-0.003”)

T-L FEATURES/BENEFITS PAGE PT6-2	T-L SPECIFICATION PAGE PT6-3	QD BUSHINGS PAGE PT6-16	GT BUSHINGS PAGE PT6-28

SPECIFICATION

QD Weld-On Hubs For Conveyor Pulleys

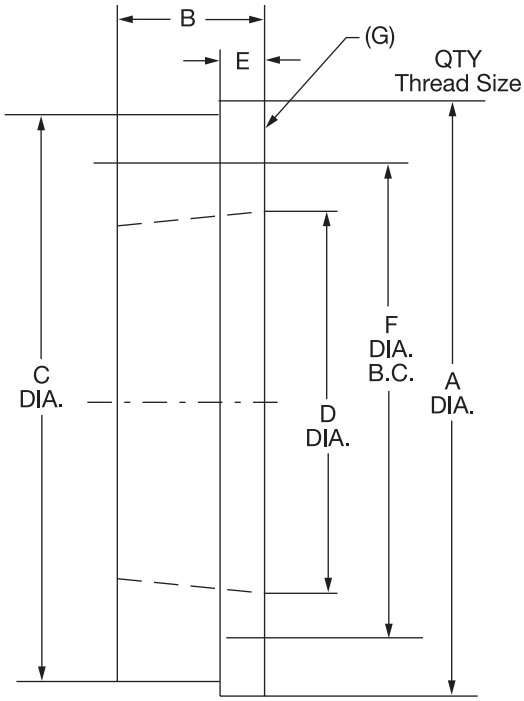

DODGE QD Weld-On Hubs for conveyor pulleys are specifically designed for use in the end disc of a conveyor pulley. Their short length through bore provides more forgiveness under the operating stresses of the pulley, These hubs are manufactured from low Carbon steel for good welding compatibility

QD Weld-On Hubs For Conveyor Pulleys

Hub No.	Part No.	For Bush.	Bore Range	Wt. Lbs.	Dimensions						Installation Screws	
					A	B	C #	D (ref)	E	F	Qty	Thread Size
SF	**228110**	SF	1/2 to 2-15/16”	3.9	5.00	1.00	4.750	3.13	0.44	3.88	3	3/8-16 NC x 2
E	**228111**	E	7/8 to 3-1/2”	6.6	6.25	1.13	6.000	3.52	0.50	5.00	3	1/2-13 NC x 2-1/4
F	**228112**	F	1 to 4”	9.3	7.00	1.25	6.750	4.44	0.56	5.63	3	9/16-12 NC x 3-5/8
JS	**228113**	J	1-1/2 to 4-1/2”	17	8.25	1.63	8.000	5.14	0.63	6.25	3	5/8-11 NC x 2-1/2
MS	**228114**	M	2 to 5-1/2”	22	9.50	2.38	9.250	6.50	0.75	7.88	4	3/4-10 NC-10 x 3
NS	**228115**	N	2-7/16 to 5-7/8”	29	10.25	2.38	10.000	7.00	0.81	8.50	4	7/8-9 NC x 3-1/2
PS	**228116**	P	2-15/16 to 7”	75	12.25	2.88	12.000	8.25	0.88	10.00	4	1-8 NC x 4-1/2
WS	**228117**	W	4 to 8-1/2”	85	15.25	3.33	14.875	10.42	0.94	12.75	4	1-1/8-7 NC x 5
SS	**228118**	S	5-1/2 to 10”	139	17.50	3.88	17.000	12.13	1.13	15.00	5	1-1/4-7 NC x 5
ZS	**228119**	Z	7 to 12”	236	22.00	4.88	21.500	15.98	1.25	19.00	5	1-1/8-7 NC x 5

+.000/-.010” Tolerance

T-L FEATURES/BENEFITS PAGE PT6-2	T-L SPECIFICATION PAGE PT6-3	QD BUSHINGS PAGE PT6-16	GT BUSHINGS PAGE PT6-28

FEATURES/BENEFITS

GRIP-TIGHT Bushings

GRIP-TIGHT is a revolutionary bushing system that will decrease maintenance costs and increase productivity and uptime. The 360° contact provides a secure fit onto the shaft, reduces vibration, eliminates shaft damage and makes the use of keys obsolete.

Features and Benefits:

- Concentric contact on shaft for better grip
- Less vibration
- Superior balanced system
- No keyways required
- No fretting corrosion
- Can be used with commercial shafting
- Reduction in material cost
- Easy on, reliable mounting
- Same bushing concept used in bearings, fan hubs, and sheaves

Possible Application:

- Fan hub
- Sheaves and sprockets
- Couplings

NOTE: Installation and maintenance instructions for Dodge products are available on www.dodge-pt.com

GRIP-TIGHT Bushings - Dimensions

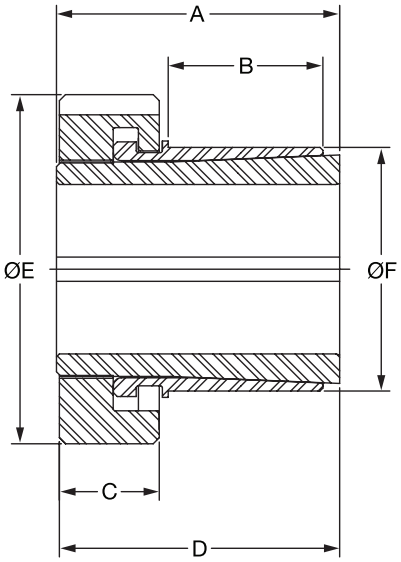

Shaft Size*	Series	Part Number	A	B	C	D	E	F +.002/-.000	Recommended Housing Bore Tolerance	Locknut Rotation From Zero
1	205	**111940**	1.46	0.80	0.52	1.43	1.80	1.256	+.0040" - 0	2/3 Turn
1-3/16	206	**111941**	1.61	0.94	0.53	1.58	2.00	1.445	+.0040" - 0	2/3 Turn
1-7/16	207	**111942**	1.62	0.98	0.53	1.59	2.30	1.693	+.0040" - 0	2/3 Turn
1-1/2	208	**111943**	1.84	1.12	0.53	1.81	2.50	1.932	+.0040" - 0	2/3 Turn
1-11/16	209	**111944**	1.85	1.15	0.53	1.82	2.67	2.080	+.0047" - 0	2/3 Turn
1-15/16	210	**111945**	1.86	1.16	0.53	1.83	2.94	2.312	+.0047" - 0	1 Turn
2-3/16	211	**111946**	1.93	1.23	0.53	1.90	3.25	2.564	+.0047" - 0	1 Turn
2-7/16	212	**111947**	2.12	1.33	0.60	2.09	3.50	2.782	+.0047" - 0	1 Turn
2-11/16	214	**111948**	2.39	1.59	0.62	2.36	3.81	3.083	+.0047" - 0	1 Turn
2-15/16	215	**111949**	2.56	1.66	0.75	2.53	4.25	3.410	+.0055" - 0	1 Turn
3-7/16	218	**111950**	2.77	1.83	0.75	2.94	4.50	3.962	+.0055" - 0	1 Turn

* Other shaft sizes available upon request

NOTE: Installation and maintenance instructions for Dodge products available at www.dodge-pt.com

T-L FEATURES/BENEFITS PAGE PT6-2	T-L SPECIFICATION PAGE PT6-3	QD BUSHINGS PAGE PT6-16	GT BUSHINGS PAGE PT6-28

SPECIFICATION

Idler Brackets and Bushings

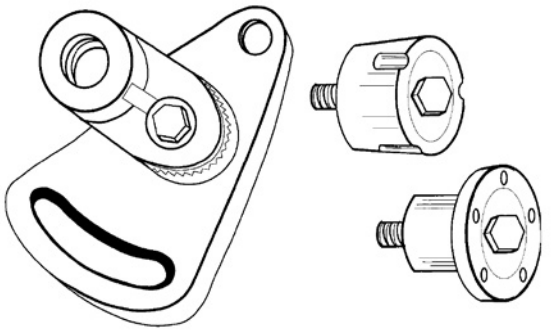

- Double Adjustable Bracket for Maximum Flexibility
- Positive Ratchet Locking Between Base and Arm
- Idler Bushings in TAPER-LOCK®and QD* Style
- Use with Stock Products, such as: Sheaves, Roller Chain Sprockets, HTD Sprockets · Compatible with Products Machined for: TAPER-LOCK 1610, 2012 and 2517 Bushings; QD SK, SF and E Bushings

* QD is a registered trademark of Emerson Electric.

Bracket Specs

		Model No.		
		5	**10**	**20**
Part Number		**115982**	**115986**	**115987**
WT.		**3.40**	**3.40**	**13.50**
DIM.	A	4.62	4.63	6.94
	B	3.50	3.50	5.25
	C	1.75	1.75	2.62
	D	2.00	2.00	5.00
DIM.	E	2.06	2.06	3.00
	F	3.06	3.06	4.56
	G	3/8	3/8	5/8
	H	1.63	1.63	2.38
DIM.	J	0.62	0.62	0.88
	N	1.16	1.16	1.63
	P	2.01	2.01	2.94
	Q	2.00	2.00	3.00
	THD	5/8-18	3/4-16	1-14

Bushing Specs

Taper-Lock		**1610-IDL**	**2012-IDL**	**2517-IDL**
Part Number		**115985**	**115983**	**115984**
For Brkt No.		**5**	**10**	**10**
DIM.	D	2.25	2.75	3.38
	L	1.00	1.25	1.75
	M	1.38	1.56	1.56
	THD	5/8 -18	3/4-16	3/4-16
	WT.	1.0	1.6	3.0
Bearings		6003	6204	6304

IDLER BRACKETS

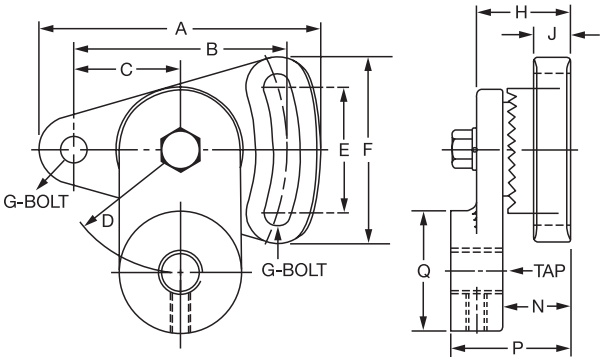

IDLER BUSHINGS

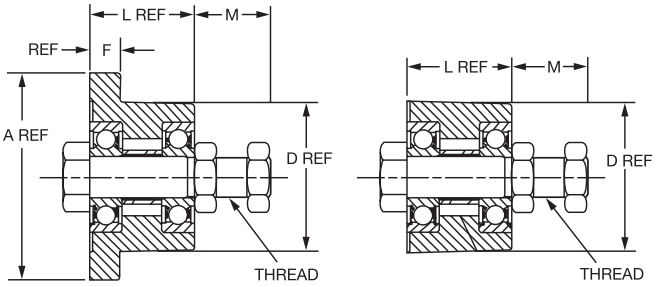

QD		**SH-IDL**	**SD-IDL**	**SK-IDL**	**SK-IDL - Large**	**SF-IDL**	**E-IDL**	**E-IDL - Large**
Part Number		**115978**	**115979**	**115988**	**115980**	**115989**	**115990**	**424063**
For Brkt No.		**–**	**–**	**10**	**–**	**20**	**20**	**–**
DIM.	A	2.63	3.18	3.88	3.88	4.63	6.00	6.00
	D	1.88	2.18	2.81	2.81	3.13	3.83	3.83
	F	0.43	0.43	0.56	0.56	0.63	0.88	0.88
	L	1.31	1.81	1.94	1.94	2.08	2.75	2.75
	M	1.69	1.69	1.44	1.44	2.13	2.19	2.19
	Thd.	3/4-10	3/4-10	3/4-16	1-8	1-14	1-14	1-1/4 - 12
	Wt.	2.10	2.50	2.80	2.80	5.00	8.60	12.50
Bearings		6004	6204	6304	6206	6206	6306	6307

T-L FEATURES/BENEFITS PAGE PT6-2	T-L SPECIFICATION PAGE PT6-3	QD BUSHINGS PAGE PT6-16	GT BUSHINGS PAGE PT6-28

CONTENTS

V-Drives

Sheaves

Features/Benefits PT7-2

Selection/Dimensions, TAPER-LOCK

Wedge (3V-5V-8V) PT7-4

Classical (A-B-C) PT7-11

Selection/Dimensions, QD Heavy Duty

Wedge (3V-5V-8V) PT7-16

Classical (A-B-C) PT7-22

Selection/Dimensions, QD Standard Duty

Wedge (3V-5V-8V) PT7-29

Classical (A-B-C) PT7-36

Selection/How To Order Custom Sheaves PT7-44

V-Belts

Features/Benefits PT7-45

Selection:

D-V Wedge PT7-46

Polyband Wedge PT7-47

S-L Classic PT7-50

Polyband S-L Classic PT7-52

Classic Cog PT7-56

Double-V PT7-57

FLEXLINK PT7-58

FHP Fractional Horsepower PT7-59

Selection

D-V Wedge

Selection Procedure PT7-60

Stock Selection Tables PT7-64

Basic Horsepower Rating PT7-96

S-L Classic Drives

Selection Procedure PT7-102

Stock Selection Tables PT7-106

Basic Horsepower Rating PT7-134

Related Products

Idler Brackets & Bushings PT7-140

Groove Belt Gages PT7-141

Software

VIA-VISA PT7-141

Engineering/Technical

Installation and Maintenance PT7-143

Part Number Index INDEX-1

Keyword Index INDEX-43

FEATURES/BENEFITS

TAPER-LOCK and QD Sheaves

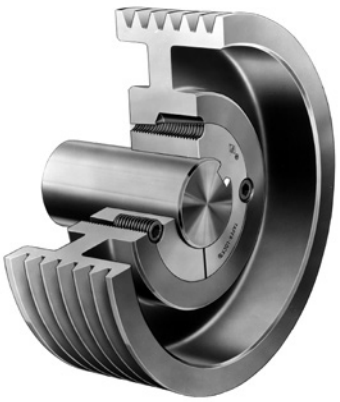

TAPER-LOCK Sheaves

QD Sheaves

DODGE Branded Sheaves come in two bushing styles, QD and Taper-Lock®. In addition to these bushing choices, DODGE now offers choices within our QD Sheaves line. Our QD Sheave line comes in a Standard Duty (SD) and a Heavy Duty (HD) offering.

Dodge QD SD Sheave Line offers:

- Economical Solution for everyday V-Belt power transmission applications
- Quality materials
- Manufacturing to Industry recognized tolerances
- Power transmission applications standard sheave loads and torque

Great for standard applications, such as air handling and fluid pumping.

Dodge QD HD Sheave Line offers:

- High strength solution for higher torque and heavy load applications
- Rigid Hubs and High strength arms
- Quality materials
- Manufacturing to Industry recognized tolerances

Great for Harsh duty applications, such as Rock Crushers and Wood Chippers.

Dodge Taper-Lock Sheave Line offers:

- A premium solution
- A Bushing system that pound for pound carries more torque, than the QD system.
- A Bushing system that reduces overhung load increasing the life of the other power transmission products in the system.
- An easy on and easy off bushing system with fewer components to install.
- Quality materials
- Manufacturing to Industry recognized tolerances

Great for Standard and Harsh duty applications, suitable for all applications.

Sheaves are manufactured in DODGE plants under strict quality control assurances. Precision machining meets or exceeds joint RMA/MPTA industry standards for smooth operation plus extended belt life. DODGE manufactures all sheaves in plants certified to ISO 9002 Quality Standards.

Sheave Construction

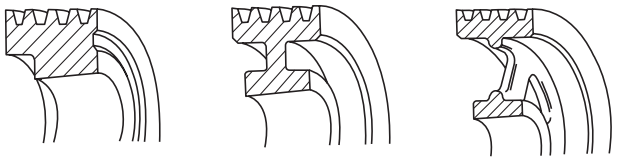

DASH 1 BLOCK — **Type 1**

DASH 2 WEB — **Type 2**

DASH 3 ARM — **Type 3**

DODGE stock sheaves are manufactured from high quality gray iron. They are given a corrosion-resistant finish before packaging and shipping. Sheave construction follows the general format illustrated above: smaller sheaves are of the block construction, intermediate sizes of the web type, and large sheaves of the arm- type construction.

TAPER-LOCK and QD Sheaves

Sheave Balance
Static balance of stock sheaves is suitable for most applications up to a rim speed of 6500 FPM. Dynamic (two-plane) balance is available at extra charge for applications that are more sensitive to vibration. Dynamic balance is recommended for operation above 6500 FPM.

V-Drive Advantages

- Isolates shock loads and vibration.
- Misalignment capability.
- Drive ratios of 6:1 or more possible.
- Stock drive selections up to:

  1100 design HP at 1180 RPM

  800 design HP at 1770 RPM
- Low maintenance.
- No lubrication required.
- Quiet operation: Motors, etc. are normally at a higher db level than V-Drives.
- Efficiency of 93% is typical.

Computer Selection
For fast, accurate evaluation of viable V-Drive alternatives, use the DODGE VIA-VISA software program which is available on the website www.dodge-pt.com. Just type the required information on the user-friendly input screen and let the software do the rest. All the significant data on the drive combinations is presented: Cost, RPM, shaft loading, installation tension, face width and diameter, etc. This is shown in a format that allows you to select the best drive for the application. See page PT7-123 for complete information on VIA-VISA.

WARNING
Stock sheaves are manufactured from gray iron, which is suitable for operation up to 6500 feet per minute rim speed (e.g. 14, max. dia. on a 1750 RPM motor). Operation above this rim speed may cause sheave failure resulting in personnel and/or equipment damage.
Refer to the Made-To-Order sheave section for constructions that are suitable for operation at higher rim speeds.

ARAMIDE CORD BELTS WARNING:

Because of the high horsepower rating of Aramide (Kevlar) cord belts, stock sheaves can not be used. Contact DODGE for made to order high capacity sheaves at 864-234-5700.

SELECTION/DIMENSIONS

3V TAPER-LOCK SHEAVES

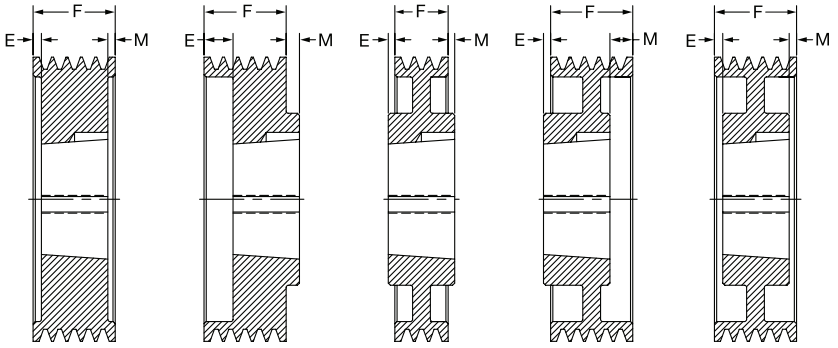

1-Groove — **F = ****

O.D.Δ	Part No.	Description	Wt.	Type‡	E	M
2.65	**112124**	1/3V2.65–1108	.75	A1	.06	0
2.8	**112125**	1/3V2.8–1108	.85	A1	.06	0
3.0	**112126**	1/3V3.0–1108	1.0	A1	.06	0
3.15	**112127**	1/3V3.15–1108	1.0	A1	.06	0
3.35	**112175**	1/3V3.35–1610	1.1	A1	.11	.05
3.65	**112176**	1/3V3.65–1610	1.3	A1	.11	.05
4.12	**112177**	1/3V4.12–1610	2.0	A1	.11	.05
4.5	**112178**	1/3V4.5–1610	2.3	A1	.11	.05
4.75	**112179**	1/3V4.75–1610	2.6	A1	.11	.05
5.0	**112180**	1/3V5.0–1610	2.9	A1	.11	.05
5.3	**112181**	1/3V5.3–1610	3.3	A1	.11	.05
5.6	**112182**	1/3V5.6–1610	3.7	A1	.11	.05
6.0	**112183**	1/3V6.0–1610	4.2	B1	0	.31
6.5	**112184**	1/3V6.5–1610	5.0	B1	0	.31
6.9	**112185**	1/3V6.9–1610	5.6	B1	0	.31
8.0	**112008**	1/3V8.0–2517	8.5	B1	0	1.06
10.6	**112009**	1/3V10.6–2517	14.0	B1	0	1.06
14.0	**112010**	1/3V14.0–2517	20.0	C3	0	.94
19.0	**112011**	1/3V19.0–3020	20.0	C3	0	.91

** 2.65–3.15=0.94, 3.35–5.6=1.06, 6.0–10.6=0.69, 14.0=0.81, 19.0=1.09

2-Groove — **F = 1.09**

O.D.Δ	Part No.	Description	Wt.	Type‡	E	M
2.65	**112128**	2/3V2.65–1108	0.75	A1	.06	.13
2.8	**112129**	2/3V2.8–1108	0.90	A1	.06	.13
3.0	**112186**	2/3V3.0–1210	1.4	A1	.11	.05
3.15	**112187**	2/3V3.15–1210	1.0	A1	.11	.05
3.35	**112188**	2/3V3.35–1610	1.5	A1	.11	.05
3.65	**112189**	2/3V3.65–1610	1.6	A1	.11	.05
4.12	**112190**	2/3V4.12–1610	2.1	A1	.11	.05
4.5	**112191**	2/3V4.5–1610	2.7	A1	.11	.05
4.75	**112192**	2/3V4.75–1610	3.1	A1	.11	.05
5.0	**112193**	2/3V5.0–1610	3.6	A1	.11	.05
5.3	**112194**	2/3V5.3–1610	4.2	A1	0	.05
5.6	**112195**	2/3V5.6–1610	4.8	A1	0	.05
6.0	**112196**	2/3V6.0–1610	5.8	A1	.09	0
6.5	**112197**	2/3V6.5–1610	7.0	A1	.09	0
6.9	**112198**	2/3V6.9–1610	8.0	A1	0	.09
8.0	**112023**	2/3V8.0–2517	11.0	B1	0	.66
10.6	**112024**	2/3V10.6–2517	15.0	B1	0	.66
14.0	**112025**	2/3V14.0–2517	22.0	C3	0	.66
19.0	**112026**	2/3V19.0–3020	22.0	C3	0	.91
25.0	**112027**	2/3V25.0–3020	30.0	C3	.125	.78

3-Groove — **F = 1.50**

O.D.Δ	Part No.	Description	Wt.	Type‡	E	M
2.65	**112130**	3/3V2.65–1108	1.0	A1	.06	.56
2.8	**112131**	3/3V2.8–1108	1.1	A1	.06	.56
3.0	**112199**	3/3V3.0–1210	1.8	A1	.11	.40
3.15	**112200**	3/3V3.15–1210	1.5	A1	.11	.40
3.35	**112201**	3/3V3.35–1610	1.8	A1	.11	.40
3.65	**112202**	3/3V3.65–1610	2.0	A1	.11	.40
4.12	**112203**	3/3V4.12–1610	2.6	A1	0	.50
4.5	**112204**	3/3V4.5–1610	3.2	A1	0	.50
4.75	**112205**	3/3V4.75–1610	3.7	A1	0	.50
5.0	**112206**	3/3V5.0–1610	4.2	A1	0	.50
5.3	**112207**	3/3V5.3–1610	4.8	A1	0	.50
5.6	**112208**	3/3V5.6–1610	5.5	A1	0	.50
6.0	**112038**	3/3V6.0–2517	7.4	B1	0	.25
6.5	**112144**	3/3V6.5–2517	9.1	B1	0	.25
6.9	**112145**	3/3V6.9–2517	10.0	B1	0	.25
8.0	**112039**	3/3V8.0–2517	15.0	B1	0	.25
10.6	**112040**	3/3V10.6–2517	18.0	C2	0	.25
14.0	**112041**	3/3V14.0–2517	25.0	C3	0	.25
19.0	**112042**	3/3V19.0–3020	34.0	C3	0	.50
25.0	**112043**	3/3V25.0–3020	36.0	C3	0	.50
33.5	**112044**	3/3V33.5–3020	53.0	C3	.25	.25

4-Groove — **F = 1.90**

O.D.Δ	Part No.	Description	Wt.	Type‡	E	M
2.65	**112132**	4/3V2.65–1108	1.2	A1	.06	.97
2.8	**112133**	4/3V2.8–1108	1.3	A1	.06	.97
3.0	**112209**	4/3V3.0–1210	2.1	A1	.11	.80
3.15	**112210**	4/3V3.15–1210	1.9	A1	.11	.80
3.35	**112211**	4/3V3.35–1610	2.2	A1	.11	.80
3.65	**112212**	4/3V3.65–1610	2.0	A1	.11	.80
4.12	**112213**	4/3V4.12–1610	3.0	A1	0	.91
4.5	**112214**	4/3V4.5–1610	3.7	A1	0	.91
4.75	**112215**	4/3V4.75–1610	4.2	A1	0	.91
5.0	**112216**	4/3V5.0–1610	4.8	A1	0	.91
5.3	**112217**	4/3V5.3–1610	5.5	A1	0	.91
5.6	**112218**	4/3V5.6–1610	6.2	A1	0	.91
6.0	**112053**	4/3V6.0–2517	8.0	A1	0	.16
6.5	**112150**	4/3V6.5–2517	10.0	A1	0	.16
6.9	**112151**	4/3V6.9–2517	12.0	A1	0	.16
8.0	**112054**	4/3V8.0–2517	18.0	A1	0	.16
10.6	**112055**	4/3V10.6–2517	20.0	A2	0	.16
14.0	**112056**	4/3V14.0–2517	29.0	A3	0	.16
19.0	**112275**	4/3V19.0–3020	45.0	C3	0	.09
25.0	**112276**	4/3V25.0–3020	42.0	D3	.19	.09
33.5	**112059**	4/3V33.5–3030	73.0	C3	.55	.55

Δ Pitch diameter = O.D. – .05”

‡ **Type 1 = Block Type, 2 = Web, 3 = Arm – See page PT7-2.**

3V TAPER-LOCK SHEAVES

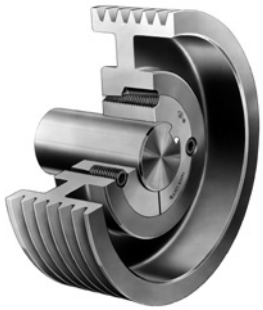

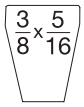

3V
Belt Profile

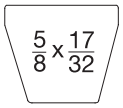

5V
Belt Profile

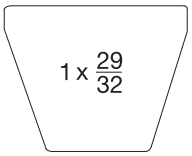

8V
Belt Profile

5-Groove						F = 2.31
O.D.Δ	Part No.	Description	Wt.	Type‡	E	M
4.5	**112102**	5/3V4.5–1615	4.0	A1	0	.81
4.75	**112103**	5/3V4.75–2517	3.9	A1	.56	0
5.0	**112061**	5/3V5.0–2517	5.4	A1	.56	0
5.30	**112062**	5/3V5.3–2517	6.7	A1	.56	0
5.6	**112063**	5/3V5.6–2517	7.6	A1	.56	0
6.0	**112064**	5/3V6.0–2517	11.0	A1	.56	0
6.5	**112152**	5/3V6.5–2517	11.0	A1	0	.56
6.9	**112153**	5/3V6.9–2517	14.0	A1	0	.56
8.0	**112065**	5/3V8.0–2517	20.0	A1	0	.56
10.6	**112066**	5/3V10.6–2517	27.0	A1	0	.56
14.0	**112067**	5/3V14.0–2517	29.0	A3	0	.56
19.0	**112277**	5/3V19.0–3020	51.0	A3	0	.31
25.0	**112069**	5/3V25.0–3030	58.0	C3	0	.69
33.5	**112070**	5/3V33.5–3030	82.0	C3	.34	.34

6-Groove						F = 2.71
O.D.Δ	Part No.	Description	Wt.	Type‡	E	M
4.75	**112071**	6/3V4.75–2517	4.4	A1	.97	0
5.0	**112072**	6/3V5.0–2517	5.4	A1	.97	0
5.3	**112073**	6/3V5.3–2517	6.5	A1	.97	0
5.6	**112074**	6/3V5.6–2517	7.7	A1	.97	0
6.0	**112075**	6/3V6.0–2517	9.5	A1	0	.97
6.5	**112154**	6/3V6.5–2517	12.0	A1	0	.97
6.9	**112155**	6/3V6.9–2517	13.0	A1	0	.97
8.0	**112076**	6/3V8.0–2517	20.0	A1	0	.97
10.6	**112077**	6/3V10.6–2517	29.0	A2	0	.97
14.0	**112078**	6/3V14.0–2517	41.0	A3	.22	.75
19.0	**112278**	6/3V19.0–3020	51.0	A3	0	.72
25.0	**112080**	6/3V25.0–3030	72.0	C3	0	.28
33.5	**112081**	6/3V33.5–3030	92.0	C3	.14	.14

8-Groove						F = 3.53
O.D.Δ	Part No.	Description	Wt.	Type‡	E	M
4.75	**112082**	8/3V4.75–2517	5.8	A1	1.78	0
5.0	**112083**	8/3V5.0–2517	6.4	A1	1.78	0
5.3	**112084**	8/3V5.3–2517	7.8	A1	1.03	.75
5.6	**112085**	8/3V5.6–2517	9.2	A1	.25	1.53
6.0	**112086**	8/3V6.0–2517	11.0	A1	.25	1.53
6.5	**112156**	8/3V6.5–2517	14.0	A1	.25	1.53
6.9	**112157**	8/3V6.9–2517	16.0	A1	.25	1.53
8.0	**112087**	8/3V8.0–3020	22.0	A1	.50	1.03
10.6	**112088**	8/3V10.6–3020	28.0	A2	.50	1.03
14.0	**112279**	8/3V14.0–3020	52.0	A3	.65	.87
19.0	**112090**	8/3V19.0–3535	67.0	A3	0	.03
25.0	**112091**	8/3V25.0–3535	75.0	A3	0	.03
33.5	**112092**	8/3V33.5–4040	111.0	C3	.23	.23

10-Groove						F = 4.34
O.D.Δ	Part No.	Description	Wt.	Type‡	E	M
4.75	**112093**	10/3V4.75–2517	7.1	A1	2.59	0
5.0	**112094**	10/3V5.0–2517	8.2	A1	2.59	0
5.3	**112158**	10/3V5.3–2517	9.3	A1	1.84	.75
5.6	**112159**	10/3V5.6–2517	10.0	A1	.50	2.09
6.0	**112095**	10/3V6.0–2517	13.0	A1	.50	2.09
6.5	**112160**	10/3V6.5–2517	15.0	A1	.50	2.09
6.9	**112161**	10/3V6.9–2517	18.0	A1	.81	1.78
8.0	**112096**	10/3V8.0–3020	25.0	A1	.25	2.09
10.6	**112097**	10/3V10.6–3020	39.0	A1	.84	1.50
14.0	**112098**	10/3V14.0–3535	57.0	A3	0	.84
19.0	**112099**	10/3V19.0–3535	81.0	A3	0	.84
25.0	**112100**	10/3V25.0–4040	88.0	A3	0	.34
33.5	**112101**	10/3V33.5–4040	128.0	A3	.17	.17

Δ Pitch diameter = O.D. – .05”

‡ **Type 1 = Block Type, 2 = Web, 3 = Arm – See page PT7-2.**

SELECTION/DIMENSIONS

5V TAPER-LOCK SHEAVES

2-Groove — **F = 1.68**

O.D.Δ	Part No.	Description	Wt.	Type‡	E	M
4.4++	**111200**	2/5V4.4–1610	3.0	A1	.06	.62
4.65++	**111201**	2/5V4.65–1610	3.0	A1	.06	.62
4.9++	**111202**	2/5V4.9–1610	4.0	A1	.06	.62
5.2++	**111203**	2/5V5.2–1610	4.0	A1	.06	.62
5.5++	**111255**	2/5V5.5–1610	5.0	A1	.06	.62
5.9++	**111204**	2/5V5.9–1610	6.0	A1	.06	.62
6.3++	**111205**	2/5V6.3–1610	7.0	A1	0	.68
6.7++	**111206**	2/5V6.7–1610	9.0	A1	0	.68
7.1	**111132**	2/5V7.1–2517	10.0	B1	0	.06
7.5	**111133**	2/5V7.5–2517	12.0	B1	0	.06
8.0	**111134**	2/5V8.0–2517	14.0	B1	0	.06
8.5	**111135**	2/5V8.5–2517	13.0	C2	0	.06
9.0	**111136**	2/5V9.0–2517	16.0	C2	0	.06
9.25	**111137**	2/5V9.25–3020	17.0	B1	0	.31
9.75	**111138**	2/5V9.75–3020	19.0	B1	0	.31
10.3	**111139**	2/5V10.3–3020	22.0	C2	0	.31
10.9	**111140**	2/5V10.9–3020	24.0	C2	0	.31
11.3	**111207**	2/5V11.3–3020	25.0	C2	0	.31
11.8	**111141**	2/5V11.8–3020	26.0	C2	0	.31
12.5	**111142**	2/5V12.5–3020	28.0	C2	0	.31
13.2	**111143**	2/5V13.2–3020	21.0	C3	0	.31
14.0	**111144**	2/5V14.0–3020	23.0	C3	0	.31
15.0	**111145**	2/5V15.0–3020	26.0	C3	0	.31
16.0	**111146**	2/5V16.0–3020	28.0	C3	0	.31
18.7	**111208**	2/5V18.7–3020	40.0	C3	0	.31
21.2	**111147**	2/5V21.2–3535	45.0	C3	.37	1.44
23.6	**111209**	2/5V23.6–3535	56.0	C3	.25	1.56
28.0	**111148**	2/5V28.0–3535	68.0	C3	.37	1.43

3-Groove — **F = 2.37**

O.D.Δ	Part No.	Description	Wt.	Type‡	E	M
4.4++	**111210**	3/5V4.4–1610	4.0	A1	1.38	0
4.65++	**111211**	3/5V4.65–1610	5.0	A1	.06	1.31
4.9++	**111212**	3/5V4.9–1610	5.0	A1	.06	1.31
5.2++	**111213**	3/5V5.2–1610	6.0	A1	.06	1.31
5.5++	**111256**	3/5V5.5–1610	6.0	A1	.06	1.31
5.9++	**111214**	3/5V5.9–2517	7.0	A1	0	.62
6.3++	**111215**	3/5V6.3–2517	9.0	A1	0	.62
6.7++	**111216**	3/5V6.7–2517	10.0	A1	0	.62
7.1	**111001**	3/5V7.1–2517	13.0	A1	0	.62
7.5	**111002**	3/5V7.5–2517	15.0	A1	0	.62
8.0	**111003**	3/5V8.0–2517	18.0	A1	0	.62
8.5	**111004**	3/5V8.5–2517	20.0	A1	0	.62
9.0	**111005**	3/5V9.0–2517	20.0	A1	0	.62
9.25	**111099**	3/5V9.25–3020	21.0	A1	0	.37
9.75	**111100**	3/5V9.75–3020	24.0	A2	0	.37
10.3	**111101**	3/5V10.3–3020	25.0	A2	0	.37
10.9	**111102**	3/5V10.9–3020	27.0	A2	0	.37
11.3	**111217**	3/5V11.3–3020	28.0	A2	0	.37
11.8	**111006**	3/5V11.8–3020	29.0	A2	0	.37
12.5	**111103**	3/5V12.5–3020	32.0	A2	0	.37
13.2	**111007**	3/5V13.2–3020	34.0	A3	0	.37
14.0	**111008**	3/5V14.0–3020	36.0	A3	0	.37
15.0	**111009**	3/5V15.0–3020	36.0	A3	0	.37
16.0	**111010**	3/5V16.0–3020	38.0	A3	0	.37
18.7	**111218**	3/5V18.7–3020	52.0	A3	0	.37
21.2	**111011**	3/5V21.2–3535	60.0	C3	0	1.12
23.6	**111219**	3/5V23.6–3535	68.0	C3	0	1.12
28.0	**111012**	3/5V28.0–3535	83.0	C3	0	1.12
31.5	**111220**	3/5V31.5–3535	96.0	C3	.34	.78
37.5	**111013**	3/5V37.5–4040	124.0	C3	.50	1.12
50.0	**111014**	3/5V50.0–4040	186.0	C3	.50	1.12

Δ Pitch diameter = O.D. – .10”

‡ **Type 1 = Block Type, 2 = Web, 3 = Arm – See drawings page PT7-2.**

++ 5VX Belts only on these sizes.

5V TAPER-LOCK SHEAVES

4-Groove						F = 3.06
O.D.Δ	Part No.	Description	Wt.	Type‡	E	M
4.4++	**111221**	4/5V4.4–1610	6.0	A1	2.06	0
4.65++	**111222**	4/5V4.65–1610	6.0	A1	2.06	0
4.9++	**111223**	4/5V4.9–1610	6.0	A1	2.06	0
5.2++	**111224**	4/5V5.2–1610	7.0	A1	2.06	0
5.5++	**111225**	4/5V5.5–2517	8.0	A1	1.31	0
5.9++	**111226**	4/5V5.9–2517	10.0	A1	1.31	0
6.3++	**111227**	4/5V6.3–2517	11.0	A1	0	1.31
6.7++	**111228**	4/5V6.7–2517	12.0	A1	0	1.31
7.1	**111020**	4/5V7.1–2517	15.0	A1	0	1.31
7.5	**111021**	4/5V7.5–2517	18.0	A1	0	1.31
8.0	**111022**	4/5V8.0–2517	21.0	A1	0	1.31
8.5	**111023**	4/5V8.5–2517	20.0	A1	0	1.31
9.0	**111035**	4/5V9.0–2517	22.0	A1	0	1.31
9.25	**111104**	4/5V9.25–3020	27.0	A1	0	1.06
9.75	**111105**	4/5V9.75–3020	31.0	A1	0	1.06
10.3	**111106**	4/5V10.3–3020	28.0	A1	0	1.06
10.9	**111107**	4/5V10.9–3020	31.0	A1	0	1.06
11.3	**111229**	4/5V11.3–3020	32.0	A1	0	1.06
11.8	**111025**	4/5V11.8–3020	34.0	A2	0	1.06
12.5	**112280**	4/5V12.5–3020	40.0	A2	0	1.06
13.2	**112281**	4/5V13.2–3020	42.0	A3	0	1.06
14.0	**111028**	4/5V14.0–3535	48.0	C2	.43	0
15.0	**111029**	4/5V15.0–3535	52.0	C3	.43	0
16.0	**111030**	4/5V16.0–3535	53.0	C3	.43	0
18.7	**111230**	4/5V18.7–3535	63.0	C3	.43	0
21.2	**111031**	4/5V21.2–3535	70.0	C3	0	.43
23.6	**111231**	4/5V23.6–3535	79.0	C3	0	.43
28.0	**111032**	4/5V28.0–3535	98.0	C3	0	.43
31.5	**111232**	4/5V31.5–3535	114.0	C3	0	.43
37.5	**111033**	4/5V37.5–4040	148.0	C3	0	.93
50.0	**111034**	4/5V50.0–4040	243.0	C3	0	.93

5-Groove						F = 3.75
O.D.Δ	Part No.	Description	Wt.	Type‡	E	M
5.9++	**111233**	5/5V5.9–2517	11.0	A1	.56	1.43
6.3++	**111234**	5/5V6.3–2517	12.0	A1	.56	1.43
6.7++	**111235**	5/5V6.7–2517	13.0	A1	.56	1.43
7.1	**111038**	5/5V7.1–3020	16.0	A1	.50	1.25
7.5	**111039**	5/5V7.5–3020	19.0	A1	.50	1.25
8.0	**111040**	5/5V8.0–3020	22.0	A1	.50	1.25
8.5	**111041**	5/5V8.5–3020	26.0	A1	.50	1.25
9.0	**111042**	5/5V9.0–3020	30.0	A1	.50	1.25
9.25	**111108**	5/5V9.25–3020	31.0	A1	.50	1.25
9.75	**111109**	5/5V9.75–3020	36.0	A1	.50	1.25
10.3	**111110**	5/5V10.3–3020	33.0	A1	.50	1.25
10.9	**111111**	5/5V10.9–3020	36.0	A1	.50	1.25
11.3	**111236**	5/5V11.3–3020	38.0	A1	.50	1.25
11.8	**111043**	5/5V11.8–3020	40.0	A2	.50	1.25
12.5	**111044**	5/5V12.5–3535	54.0	A2	0	.25
13.2	**111045**	5/5V13.2–3535	57.0	A2	0	.25
14.0	**111046**	5/5V14.0–3535	57.0	A3	0	.25
15.0	**111047**	5/5V15.0–3535	65.0	A3	0	.25
16.0	**111048**	5/5V16.0–3535	70.0	A3	0	.25
18.7	**111237**	5/5V18.7–3535	84.0	A3	0	.25
21.2	**111049**	5/5V21.2–4040	81.0	C3	0	.25
23.6	**111238**	5/5V23.6–4040	92.0	C3	0	.25
28.0	**111050**	5/5V28.0–4040	115.0	C3	0	.25
31.5	**111239**	5/5V31.5–4040	155.0	C3	0	.25
37.5	**111051**	5/5V37.5–4040	190.0	C3	0	.25
50.0	**111052**	5/5V50.0–4545	280.0	C3	0	.75

Δ Pitch diameter = O.D. – .10”

‡ Type 1 = Block Type, 2 = Web, 3 = Arm – See drawings page PT7-2.

++ 5VX Belts only on these sizes.

SELECTION/DIMENSIONS

5V TAPER-LOCK SHEAVES

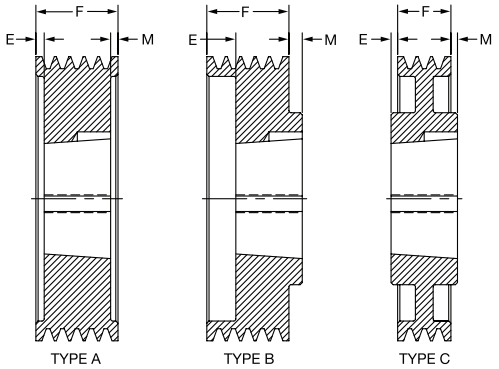

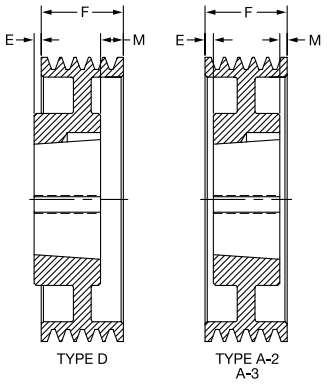

6-Groove						F = 4.43
O.D.Δ	Part No.	Description	Wt.	Type‡	E	M
5.9++	**111240**	6/5V5.9–2517	13.0	A1	1.12	1.56
6.3++	**111241**	6/5V6.3–2517	13.0	A1	.81	1.87
6.7++	**111242**	6/5V6.7–2517	15.0	A1	.81	1.87
7.1	**111056**	6/5V7.1–3020	18.0	A1	.75	1.68
7.5	**111057**	6/5V7.5–3020	21.0	A1	.75	1.68
8.0	**111058**	6/5V8.0–3020	24.0	A1	.75	1.68
8.5	**111059**	6/5V8.5–3020	28.0	A1	.75	1.68
9.0	**111060**	6/5V9.0–3020	32.0	A1	.75	1.68
9.25	**111112**	6/5V9.25–3535	41.0	A1	0	.93
9.75	**111113**	6/5V9.75–3535	48.0	A1	0	.93
10.3	**111114**	6/5V10.3–3535	56.0	A1	0	.93
10.9	**111115**	6/5V10.9–3535	65.0	A1	0	.93
11.3	**111243**	6/5V11.3–3535	53.0	A1	0	.93
11.8	**111061**	6/5V11.8–3535	59.0	A2	0	.93
12.5	**111062**	6/5V12.5–3535	59.0	A2	0	.93
13.2	**111063**	6/5V13.2–3535	67.0	A2	0	.93
14.0	**111064**	6/5V14.0–3535	67.0	A2	0	.93
15.0	**111065**	6/5V15.0–4040	82.0	A2	0	.43
16.0	**111066**	6/5V16.0–4040	84.0	A2	0	.43
18.7	**111244**	6/5V18.7–4040	97.0	A2	0	.43
21.2	**111067**	6/5V21.2–4040	91.0	A3	0	.43
23.6	**111245**	6/5V23.6–4040	124.0	A3	0	.43
28.0	**111068**	6/5V28.0–4040	149.0	A3	0	.43
31.5	**111246**	6/5V31.5–4040	171.0	A3	0	.43
37.5	**111069**	6/5V37.5–4545	214.0	C3	0	.06
50.0	**111070**	6/5V50.0–4545	336.0	D3	.50	.56

8-Groove						F = 5.81
O.D.Δ	Part No.	Description	Wt.	Type‡	E	M
7.1	**111075**	8/5V7.1–3030	24.0	A1	1.00	1.81
7.5	**111076**	8/5V7.5–3030	28.0	A1	1.00	1.81
8.0	**111077**	8/5V8.0–3030	33.0	A1	1.00	1.81
8.5	**111078**	8/5V8.5–3030	38.0	A1	1.00	1.81
9.0	**111079**	8/5V9.0–3535	44.0	A1	1.00	1.31
9.25	**111116**	8/5V9.25–3535	45.0	A1	1.00	1.31
9.75	**111117**	8/5V9.75–3535	51.0	A1	1.00	1.31
10.3	**111118**	8/5V10.3–3535	60.0	A1	1.00	1.31
10.9	**111119**	8/5V10.9–3535	68.0	A1	1.00	1.31
11.3	**111247**	8/5V11.3–3535	57.0	A1	1.00	1.31
11.8	**111080**	8/5V11.8–3535	63.0	A1	1.00	1.31
12.5	**111081**	8/5V12.5–4040	102.0	A1	.25	1.56
13.2	**111082**	8/5V13.2–4040	82.0	A1	.25	1.56
14.0	**111083**	8/5V14.0–4040	87.0	A1	.25	1.56
15.0	**111084**	8/5V15.0–4040	97.0	A2	.25	1.56
16.0	**111085**	8/5V16.0–4040	102.0	A2	.25	1.56
18.7	**111248**	8/5V18.7–4040	112.0	A3	.25	1.56
21.2	**111086**	8/5V21.2–4040	129.0	A3	.25	1.56
23.6	**111249**	8/5V23.6–4040	145.0	A3	.25	1.56
28.0	**111087**	8/5V28.0–4545	178.0	A3	.25	1.06
31.5	**111250**	8/5V31.5–4545	228.0	A3	.25	1.06
37.5	**111088**	8/5V37.5–4545	279.0	A3	.25	1.06
50.0	**111089**	8/5V50.0–4545	403.0	A3	.25	1.06

10-Groove						F = 7.18
O.D.Δ	Part No.	Description	Wt.	Type‡	E	M
8.0	**111120**	10/5V8.0–3030	36.0	A1	1.00	3.18
8.5	**111121**	10/5V8.5–3030	42.0	A1	1.00	3.18
9.0	**111122**	10/5V9.0–3535	47.0	A1	1.00	2.68
9.25	**111123**	10/5V9.25–4040	46.0	A1	1.00	2.18
9.75	**111124**	10/5V9.75–4040	54.0	A1	1.00	2.18
10.3	**111125**	10/5V10.3–4040	64.0	A1	1.00	2.18
10.9	**111126**	10/5V10.9–4040	73.0	A1	1.00	2.18
11.3	**111251**	10/5V11.3–4040	80.0	A1	1.00	2.18
11.8	**111127**	10/5V11.8–4040	92.0	A1	1.00	2.18
12.5	**111090**	10/5V12.5–4040	107.0	A1	.38	2.81
13.2	**111091**	10/5V13.2–4040	107.0	A1	.38	2.81
14.0	**111092**	10/5V14.0–4545	106.0	A1	.75	1.93
15.0	**111093**	10/5V15.0–4545	116.0	A1	.69	2.00
16.0	**111094**	10/5V16.0–4545	126.0	A2	0	2.68
18.7	**111252**	10/5V18.7–4545	116.0	A2	.50	2.18
21.2	**111095**	10/5V21.2–4545	149.0	D3	.50	3.18
23.6	**111253**	10/5V23.6–4545	191.0	A3	.50	2.18
28.0	**111096**	10/5V28.0–4545	227.0	A3	.75	1.93
31.5	**111254**	10/5V31.5–4545	259.0	A3	.75	1.93
37.5	**111097**	10/5V37.5–4545	320.0	A3	.75	1.93
50.0	**111098**	10/5V50.0–5050	471.0	A3	.75	1.43

Δ Pitch diameter = O.D. – .10”

‡ Type 1 = Block Type, 2 = Web, 3 = Arm – See page PT7-2.

++ 5VX Belts only on these sizes.

8V TAPER-LOCK SHEAVES

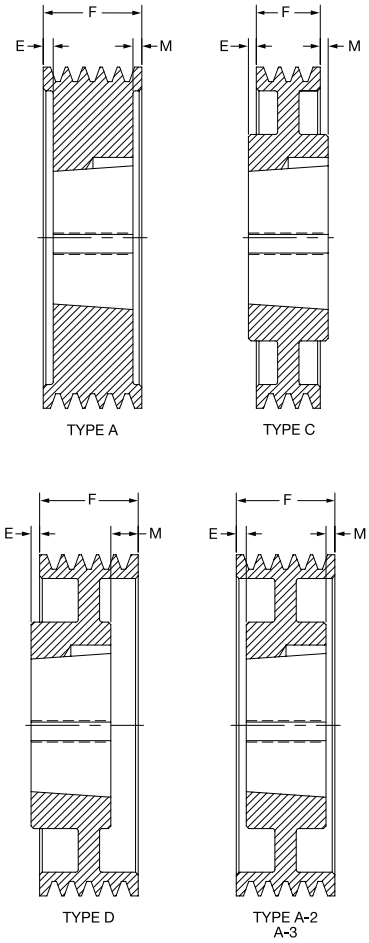

4-Groove						F = 4.87
O.D.Δ	Part No.	Description	Wt.	Type‡	E	M
12.5	**110003**	4/8V12.5–4040	83.0	A1	0	.87
13.2	**110008**	4/8V13.2–4040	125.0	A2	0	.87
14.0	**110950**	4/8V14.0–4040	88.0	A2	0	.87
15.0	**110951**	4/8V15.0–4040	111.0	A2	.50	.37
16.0	**110952**	4/8V16.0–4040	105.0	A2	.44	.44
17.0	**110953**	4/8V17.0–4040	150.0	A2	0	.87
18.0	**110954**	4/8V18.0–4040	150.0	A2	0	.87
19.0	**110955**	4/8V19.0–4040	146.0	A2	0	.87
20.0	**110015**	4/8V20.0–4545	145.0	A2	0	.37
21.2	**110016**	4/8V21.2–4545	138.0	A2	0	.37
22.4	**110004**	4/8V22.4–4545	147.0	A2	0	.37
24.8	**110681**	4/8V24.8–5050	191.0	D3	.94	.81
30.0	**110957**	4/8V30.0–5050	233.0	D3	1.12	1.00
35.5	**110900**	4/8V35.5–5050	278.0	D3	1.12	1.00
40.0	**110006**	4/8V40.0–5050	324.0	D3	1.12	1.00
44.5	**110002**	4/8V44.5–5050	367.0	D3	.25	.12
53.0	**110007**	4/8V53.0–5050	469.0	B3	1.12	1.25

5-Groove						F = 6.00
O.D.Δ	Part No.	Description	Wt.	Type‡	E	M
12.5	**110958**	5/8V12.5–4040	96.0	A2	.18	1.81
13.2	**110959**	5/8V13.2–4040	100.0	A2	.18	1.81
14.0	**110960**	5/8V14.0–4040	107.0	A2	.18	1.81
15.0	**110961**	5/8V15.0–4040	106.0	A2	.18	1.81
16.0	**110962**	5/8V16.0–4040	110.0	A2	.50	1.50
17.0	**110023**	5/8V17.0–4545	120.0	A3	0	1.50
18.0	**110024**	5/8V18.0–4545	180.0	A3	0	1.50
19.0	**110025**	5/8V19.0–4545	200.0	A3	0	1.50
20.0	**110026**	5/8V20.0–4545	145.0	A3	0	1.50
21.2	**110027**	5/8V21.2–4545	185.0	A3	0	1.50
22.4	**110028**	5/8V22.4–4545	176.0	A3	0	1.50
24.8	**110682**	5/8V24.8–5050	206.0	A3	0	1.50
30.0	**110029**	5/8V30.0–5050	319.0	D3	.62	1.62
35.5	**110046**	5/8V35.5–5050	399.0	A3	0	1.00
40.0	**110017**	5/8V40.0–5050	350.0	A3	0	1.00
44.5	**110047**	5/8V44.5–5050	572.0	A3	0	1.00
53.0	**110018**	5/8V53.0–5050	565.0	A3	0	1.00

Δ Pitch diameter = O.D. – .20”

‡ **Type 1 = Block Type, 2 = Web, 3 = Arm – See drawings page PT7-2.**

6-Groove						F = 7.12
O.D.Δ	Part No.	Description	Wt.	Type‡	E	M
12.5	**110964**	6/8V12.5–4040	98.0	A1	1.00	2.12
13.2	**110965**	6/8V13.2–4040	114.0	A2	1.00	2.12
14.0	**110966**	6/8V14.0–4040	134.0	A2	1.00	2.12
15.0	**110033**	6/8V15.0–4545	146.0	A2	.50	2.12
16.0	**110034**	6/8V16.0–4545	140.0	A2	.12	2.50
17.0	**110035**	6/8V17.0–4545	143.0	A2	.50	2.12
18.0	**110036**	6/8V18.0–4545	164.0	A2	.50	2.12
19.0	**110037**	6/8V19.0–4545	166.0	A3	.50	2.12
20.0	**110967**	6/8V20.0–5050	144.0	D3	1.31	3.43
21.2	**110968**	6/8V21.2–5050	201.0	A3	.19	1.94
22.4	**110969**	6/8V22.4–5050	212.0	D3	1.13	3.25
24.8	**110683**	6/8V24.8–5050	236.0	D3	.13	2.25
30.0	**110041**	6/8V30.0–5050	292.0	A3	.06	2.06
35.5	**110049**	6/8V35.5–5050	363.0	A3	.50	1.62
40.0	**110042**	6/8V40.0–5050	423.0	A3	.50	1.62
44.5	**110064**	6/8V44.5–5050	485.0	A3	.50	1.62
53.0	**110043**	6/8V53.0–5050	621.0	A3	.50	1.62

SELECTION/DIMENSIONS

8V TAPER-LOCK SHEAVES

8-Groove						F = 9.37
O.D.Δ	Part No.	Description	Wt.	Type‡	E	M
12.5	**110050**	8/8V12.5–4545	150.0	A1	1.50	3.37
13.2	**110051**	8/8V13.2–4545	141.0	A2	1.50	3.37
14.0	**110052**	8/8V14.0–4545	160.0	A2	1.50	3.37
15.0	**110053**	8/8V15.0–4545	185.0	A2	1.50	3.37
16.0	**110054**	8/8V16.0–4545	168.0	A2	1.50	3.37
17.0	**110971**	8/8V17.0–5050	179.0	A2	.18	4.18
18.0	**110056**	8/8V18.0–5050	204.0	A2	.18	4.18
19.0	**110057**	8/8V19.0–5050	223.0	A2	.18	4.18
20.0	**110058**	8/8V20.0–5050	178.0	A2	.18	4.18
21.2	**110059**	8/8V21.2–5050	192.0	A3	.18	4.18
22.4	**110060**	8/8V22.4–5050	249.0	A3	.18	4.18
24.8	**110065**	8/8V24.8–5050	285.0	A3	2.12	2.25
30.0	**110061**	8/8V30.0–5050	356.0	A3	1.18	3.18
35.5	**110066**	8/8V35.5–5050	441.0	A3	1.00	3.37
40.0	**110062**	8/8V40.0–5050	517.0	A3	1.00	3.37
44.5	**110973**	8/8V44.5–6050	596.0	A3	1.00	3.37
53.0	**110974**	8/8V53.0–6050	759.0	A3	1.00	3.37

10-Groove						F = 11.62
O.D.Δ	Part No.	Description	Wt.	Type‡	E	M
12.5	**- - -**	10/8V12.5–4545	- - -	A1	2.06	5.06
13.2	**110071**	10/8V13.2–4545	150.0	A1	2.06	5.06
14.0	**110072**	10/8V14.0–4545	175.0	A2	2.06	5.06
15.0	**110073**	10/8V15.0–5050	175.0	A2	1.31	4.68
16.0	**110074**	10/8V16.0–5050	200.0	A2	2.18	4.43
17.0	**110075**	10/8V17.0–5050	210.0	A2	2.25	4.37
18.0	**110076**	10/8V18.0–5050	220.0	A2	2.25	4.37
19.0	**110077**	10/8V19.0–5050	240.0	A3	2.25	4.37
20.0	**110078**	10/8V20.0–5050	211.0	A3	2.25	4.37
21.2	**110079**	10/8V21.2–5050	270.0	A3	2.50	4.12
22.4	**110080**	10/8V22.4–5050	291.0	A3	2.25	4.37
24.8	**110068**	10/8V24.8–5050	328.0	A3	2.37	4.25
30.0	**110081**	10/8V30.0–5050	416.0	A3	2.25	4.37
35.5	**110976**	10/8V35.5–6050	517.0	A3	2.25	4.37
40.0	**110977**	10/8V40.0–6050	606.0	A3	2.25	4.37
44.5	**110978**	10/8V44.5–6050	701.0	A3	2.25	4.37
53.0	**110979**	10/8V53.0–6050	898.0	A3	2.25	4.37

12-Groove						F = 13.87
O.D.Δ	Part No.	Description	Wt.	Type‡	E	M
12.5	**110980**	12/8V12.5–5050	153.0	A1	3.18	5.68
13.2	**110981**	12/8V13.2–5050	180.0	A1	3.00	5.87
14.0	**110982**	12/8V14.0–5050	186.0	A1	3.18	5.68
15.0	**110983**	12/8V15.0–5050	221.0	A2	1.88	7.00
16.0	**110984**	12/8V16.0–5050	247.0	A2	1.88	7.00
17.0	**110985**	12/8V17.0–5050	267.0	A2	3.50	5.38
18.0	**110986**	12/8V18.0–5050	274.0	A2	3.53	5.34
19.0	**110987**	12/8V19.0–5050	306.0	A2	2.25	6.62
20.0	**110988**	12/8V20.0–5050	249.0	A3	2.25	6.62
21.2	**110989**	12/8V21.2–5050	294.0	A3	2.25	6.62
22.4	**110990**	12/8V22.4–5050	337.0	A3	2.25	6.62
24.8	**110991**	12/8V24.8–5050	380.0	A3	5.37	3.50
30.0	**110992**	12/8V30.0–6050	482.0	A3	4.00	4.87
35.5	**110993**	12/8V35.5–6050	597.0	A3	4.00	4.87
40.0	**110994**	12/8V40.0–6050	702.0	A3	4.00	4.87
44.5	**110995**	12/8V44.5–6050	814.0	A3	4.00	4.87
53.0	**110996**	12/8V53.0–7060	1077.0	A3	5.00	2.87

Δ Pitch diameter = O.D. – .20”

‡ **Type 1 = Block Type, 2 = Web, 3 = Arm – See drawings page PT7-2.**

A/B TAPER-LOCK SHEAVES

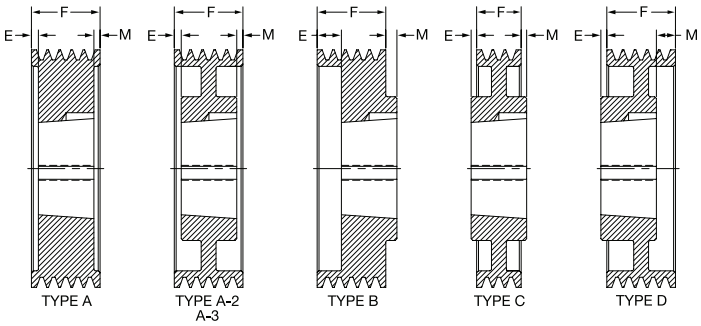

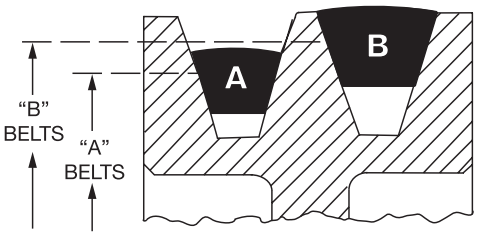

Drawing illustrates how either A or B belts may be used with Dual Duty groove sheaves.

1-Groove — F = **

O.D.Δ	Part No.	Description	Wt.	Type‡	E	M
3.75	**118190**	1A3.0B3.4-1210	1.5	A1	.11	.04
3.95	**118191**	1A3.2B3.6-1210	1.7	A1	.11	.04
4.15	**118301**	1A3.4B3.8-1610	1.5	A1	.11	.04
4.35	**118302**	1A3.6B4.0-1610	1.9	A1	.11	.04
4.55	**118194**	1A3.8B4.2-1610	2.2	A1	.11	.04
4.75	**118195**	1A4.0B4.4-1610	2.5	A1	.11	.04
4.95	**118196**	1A4.2B4.6-1610	2.9	A1	.11	.04
5.15	**118197**	1A4.484.8-1610	3.3	A1	.11	.04
5.35	**118198**	1A4.6B5.0-1610	3.6	A1	.11	.04
5.55	**118199**	1A4.8B5.2-1610	4.1	A1	.11	.04
5.75	**118200**	1A5.085.4-1610	4.5	A1	.11	.04
5.95	**118201**	1A5.2B5.6-1610	4.9	A1	0	0
6.15	**118202**	1A5.4B5.8-1610	5.3	A1	0	0
6.35	**118203**	1A5.686.0-1610	5.8	A1	0	0
6.55	**118204**	1A5.8B6.2-1610	6.3	A1	0	0
6.75	**118205**	1A6.0B6.4-1610	6.8	A1	0	0
6.95	**118206**	1A6.2B6.6-1610	7.5	A1	0	0
7.15	**118207**	1A6.4B6.8-1610	7.8	A1	0	0
7.35	**118340**	1A6.6B7.0-2517	8.5	B1	0	.75
7.75	**118303**	1A7.0B7.4-2517	9.4	B1	0	.75
8.35	**118341**	1A7.6B8.0-2517	11.0	B1	0	.75
8.95	**118304**	1A8.2B8.6-2517	12.0	B1	0	.75
9.75	**118305**	1A9.0B9.4-2517	14.0	B1	0	.75
11.35	**118022**	1A10.6611.0-2517	15.0	B1	0	.75
12.75	**118023**	1A12.0B12.4-2517	114.0	C3	.25	.50
13.95	**118342**	1A13.2B13.6-2517	16.0	C3	.25	.50
15.75	**118024**	1A15.0B15.4-2517	18.0	C3	.38	.38
16.35	**118343**	1A15.6B16.0-2517	22.0	C3	.38	.38
18.75	**118025**	1A18.0B18.4-2517	27.0	C3	.18	.43

Δ P.D. for "A" Belts = O.D. – .37"
P.D. for "B" Belts = O.D. +.01"

‡ **Type 1 = Block Type, 2 = Web, 3 = Arm – See page PT7-2.**

** 1.16" for 1A3.0B3.4 thru 1A4.4B4.8
1.05" for 1A4.6B5.0 thru 1A5.0B15.4
1.13" for 1A15.6B16.0 thru 1A18.0B18.4

2-Groove — F = 1.75

O.D.Δ	Part No.	Description	Wt.	Type‡	E	M
3.75	**118211**	2A3.0B3.4-1210	2.2	A1	.10	.65
3.95	**118212**	2A3.2B3.6-1210	2.6	A1	.10	.65
4.15	**118306**	2A3.4B3.8-1610	2.5	A1	0	.75
4.35	**118307**	2A3.6B4.0-1610	2.9	A1	0	.75
4.55	**118215**	2A3.8B4.2-1610	3.3	A1	0	.75
4.75	**118216**	2A4.0B4.4-1610	3.7	A1	0	.75
4.95	**118217**	2A4.2B4.6-1610	4.2	A1	0	.75
5.15	**118218**	2A4.4B4.8-1610	4.1	A1	0	.75
5.35	**118219**	2A4.6B5.0-1610	5.0	A1	0	.75
5.55	**118220**	2A4.8B5.2-1610	5.5	A1	0	.75
5.75	**118221**	2A5.0B5.4-1610	5.9	A1	0	.75
5.95	**118222**	2A5.2B5.6-1610	6.5	A1	0	.75
6.15	**118223**	2A5.4B5.8-1610	6.9	A1	0	.75
6.35	**118224**	2A5.6B6.0-1610	7.6	A1	0	.75
6.55	**118225**	2A5.8B6.2-1610	8.2	A1	0	.75
6.75	**118226**	2A6.0B6.4-1610	8.6	A1	0	.75
6.95	**118227**	2A6.2B6.6-1610	9.5	A1	0	.75
7.15	**118228**	2A6.4B6.8-1610	9.8	A1	0	.75
7.35	**118344**	2A6.6B7.0-2517	14.0	A1	0	0
7.75	**118044**	2A7.0B7.4-2517	14.0	A1	0	0
8.35	**118345**	2A7.6B8.0-2517	15.0	C2	0	0
8.95	**118045**	2A8.2B8.6-2517	15.0	C2	0	0
9.75	**118046**	2A9.0B9.4-2517	18.0	C2	0	0
11.35	**118047**	2A10.6B11.0-2517	25.0	C2	0	0
12.75	**118048**	2A12.0B12.4-2517	18.0	C3	0	0
13.95	**118346**	2A13.2B13.6-2517	24.0	C3	0	0
15.75	**118049**	2A15.0B15.4-2517	24.0	C3	0	0
16.35	**118347**	2A15.6B16.0-2517	26.0	C3	0	0
18.75	**118050**	2A18.0B18.4-2517	33.0	C3	0	0
20.35	**114068**	2B20.0-3020	31.0	C3	0	.25
25.35	**114069**	2B25.0-3020	41.0	C3	0	.25
30.35	**114070**	2B30.0-3020	52.0	C3	0	.25
38.35	**114071**	2B38.0-3020	71.0	C3	0	.25

SELECTION/DIMENSIONS

A/B TAPER-LOCK SHEAVES

3-Groove — **F = 2.50**

O.D.Δ	Part No.	Description	Wt.	Type‡	E	M
3.75	**118229**	3A3.0B3.4–1210	3.0	A1	0	1.50
3.95	**118230**	3A3.2B3.6–1210	3.5	A1	0	1.50
4.15	**118308**	3A3.4B3.8–1610	3.4	A1	0	1.50
4.35	**118309**	3A3.6B4.0–1610	4.0	A1	0	1.50
4.55	**118233**	3A3.8B4.2–1610	4.6	A1	0	1.50
4.75	**118234**	3A4.0B4.4–1610	4.9	A1	0	1.50
4.95	**118235**	3A4.2B4.6–1610	5.4	A1	0	1.50
5.15	**118310**	3A4.4B4.8–1610	5.9	A1	0	1.50
5.35	**118311**	3A4.6B5.0–1610	6.4	A1	0	1.50
5.55	**118312**	3A4.8B5.2–1610	7.0	A1	0	1.50
5.75	**118313**	3A5.0B5.4–2517	7.8	A1	.75	0
5.95	**118314**	3A5.2B5.6–2517	8.2	A1	.75	0
6.15	**118315**	3A5.4B5.8–2517	8.9	A1	.75	0
6.35	**118316**	3A5.6B6.0–2517	9.8	A1	.75	0
6.55	**118317**	3A5.8B6.2–2517	11.0	A1	0	.75
6.75	**118318**	3A6.0B6.4–2517	12.0	A1	0	.75
6.95	**118319**	3A6.2B6.6–2517	13.0	A1	0	.75
7.15	**118320**	3A6.4B6.8–2517	14.0	A1	0	.75
7.35	**118348**	3A6.6B7.0–2517	15.0	A1	0	.75
7.75	**118069**	3A7.0B7.4–2517	17.0	A1	.0	.75
8.35	**118349**	3A7.6B8.0–2517	19.0	A1	0	.75
8.95	**118070**	3A8.2B8.6–2517	19.0	A1	0	.75
9.75	**118071**	3A9.0B9.4–2517	21.0	A2	0	.75
11.35	**118072**	3A10.6B11.0–2517	28.0	A2	0	.75
12.75	**118073**	3A12.0B12.4–2517	22.0	A3	0	.75
13.95	**118350**	3A13.2B13.6–2517	25.0	A3	0	.75
15.75	**118074**	3A15.0B15.4–2517	30.0	A3	0	.75
16.35	**118351**	3A15.6B16.0–2517	32.0	A3	0	.75
18.75	**118075**	3A18.0B18.4–2517	39.0	A3	0	.75
20.35	**114072**	3B20.0–3020	39.0	A3	0	.50
25.35	**114073**	3B25.0–3020	52.0	A3	0	.50
30.35	**114074**	3B30.0–3020	66.0	A3	0	.50
38.35	**114033**	3B38.0–3020	103.0	A3	0	.50

4-Groove — **F = 3.25**

O.D.Δ	Part No.	Description	Wt.	Type‡	E	M
3.75	**118247**	4A3.0B3.4–1210	3.7	A1	2.25	0
3.95	**118248**	4A3.2B3.6–1210	4.4	A1	2.25	0
4.15	**118321**	4A3.4B3.8–1610	4.3	A1	2.25	0
4.35	**118322**	4A3.6B4.0–1610	5.1	A1	2.25	0
4.55	**118251**	4A3.8B4.2–1610	5.5	A1	2.25	0
4.75	**118252**	4A4.0B4.4–1610	6.0	A1	2.25	0
4.95	**118253**	4A4.2B4.6–1610	6.7	A1	2.25	0
5.15	**118323**	4A4.4B4.8–1610	7.2	A1	2.25	0
5.35	**118324**	4A4.6B5.0–2517	6.7	A1	1.50	0
5.55	**118325**	4A4.8B5.2–2517	8.0	A1	1.50	0
5.75	**118326**	4A5.0B5.4–2517	8.7	A1	1.50	0
5.95	**118327**	4A5.2B5.6–2517	9.8	A1	1.50	0
6.15	**118328**	4A5.4B5.8–2517	10.0	A1	1.50	0
6.35	**118329**	4A5.6B6.0–2517	12.0	A1	1.50	0
6.55	**118090**	4A5.8B6.2–2517	13.0	A1	0	1.50
6.75	**118091**	4A6.0B6.4–2517	13.0	A1	0	1.50
6.95	**118092**	4A6.2B6.6–2517	15.0	A1	0	1.50
7.15	**118093**	4A6.4B6.8–2517	15.0	A1	0	1.50
7.35	**118352**	4A6.6B7.0–2517	16.0	A1	0	1.50
7.75	**118094**	4A7.0B7.4–2517	19.0	A1	0	1.50
8.35	**118353**	4A7.6B8.0–2517	21.0	A1	0	1.50
8.95	**118095**	4A8.2B8.6–2517	21.0	A1	0	1.50
9.75	**118096**	4A9.0B9.4–2517	24.0	A1	0	1.50
11.35	**118097**	4A10.6B11.0–2517	31.0	A1	0	1.50
12.75	**118098**	4A12.0B12.4–2517	30.0	A3	.37	1.12
13.95	**118354**	4A13.2B13.6–2517	34.0	A3	.37	1.12
15.75	**118099**	4A15.0B15.4–2517	41.0	A3	.37	1.12
16.35	**118355**	4A15.6B16.0–2517	61.0	A3	.37	1.12
18.75	**118100**	4A18.0B18.4–2517	67.0	A3	.48	1.01
20.35	**114075**	4B20.0–3020	58.0	A3	.50	.75
25.35	**114041**	4B25.0–3030	73.0	A3	0	.25
30.35	**114042**	4B30.0–3030	91.0	A3	0	.25
38.35	**114043**	4B38.0–3030	123.0	A3	0	.25

P.D. for "A" Belts = O.D. – .37"

P.D. for "B" Belts = O.D. +.01"

‡ **Type 1 = Block Type, 2 = Web, 3 = Arm – See page PT7-2.**

A/B TAPER-LOCK SHEAVES

5-Groove						F = 4.00
O.D.Δ	Part No.	Description	Wt.	Type‡	E	M
3.75	**118101**	5A3.0B3.4–1215	4.9	A1	.87	1.62
3.95	**118102**	5A3.2B3.6–1215	5.4	A1	.87	1.62
4.15	**118103**	5A3.4B3.8–1215	5.1	A1	.87	1.62
4.35	**118104**	5A3.6B4.0–1215	6.1	A1	.87	1.62
4.55	**118105**	5A3.8B4.2–1615	6.6	A1	.87	1.62
4.75	**118106**	5A4.0B4.4–1615	6.9	A1	.87	1.62
4.95	**118107**	5A4.2B4.6–1615	8.6	A1	.87	1.62
5.15	**118356**	5A4.4B4.8–1615	9.4	A1	.87	1.62
5.35	**118109**	5A4.6B5.0–1615	9.2	A1	.87	1.62
5.55	**118110**	5A4.8B5.2–1615	9.9	A1	.87	1.62
5.75	**118111**	5A5.0B5.4–2517	11.0	A1	.81	1.43
5.95	**118112**	5A5.2B5.6–2517	11.0	A1	.81	1.43
6.15	**118357**	5A5.4B5.8–2517	13.0	A1	.81	1.43
6.35	**118114**	5A5.6B6.0–2517	13.0	A1	.81	1.43
6.55	**118358**	5A5.8B6.2–2517	14.0	A1	.81	1.43
6.75	**118116**	5A6.0B6.4–2517	15.0	A1	.81	1.43
6.95	**118359**	5A6.2B6.6–2517	16.0	A1	.81	1.43
7.15	**118118**	5A6.4B6.8–2517	18.0	A1	.81	1.43
7.35	**118360**	5A6.6B7.0–2517	18.0	A1	.75	1.50
7.75	**118119**	5A7.0B7.4–2517	22.0	A1	.75	1.50
8.35	**118361**	5A7.6B8.0–2517	23.0	A1	.50	1.75
8.95	**118120**	5A8.2B8.6–2517	24.0	A1	.75	1.50
9.75	**118121**	5A9.0B9.4–2517	26.0	A1	.75	1.50
11.35	**118122**	5A10.6B11.0–2517	32.0	A2	.75	1.50
12.75	**118123**	5A12.0B12.4–2517	35.0	A3	.75	1.50
13.95	**118362**	5A13.2B13.6–2517	38.0	A3	1.00	1.25
15.75	**118124**	5A15.0B15.4–2517	43.0	A3	.75	1.50
16.35	**118363**	5A15.6B16.0–2517	67.0	A3	.75	1.50
18.75	**118125**	5A18.0B18.4–2517	70.0	A3	.81	1.44
20.35	**114050**	5B20.0–3030	65.0	A3	.25	.75
25.35	**114051**	5B25.0–3030	84.0	A3	.25	.75
30.35	**114052**	5B30.0–3030	105.0	A3	.38	.63
38.35	**114053**	5B38.0–3030	144.0	A3	.25	.75

6-Groove						F = 4.75
O.D.Δ	Part No.	Description	Wt.	Type‡	E	M
4.55	**118130**	6A3.8B4.2–1615	7.9	A1	1.25	2.00
4.75	**118131**	6A4.0B4.4–1615	9.3	A1	1.25	2.00
4.95	**118132**	6A4.2B4.6–1615	9.7	A1	1.25	2.00
5.15	**118364**	6A4.4B4.8–1615	11.0	A1	1.25	2.00
5.35	**118134**	6A4.6B5.0–1615	10.0	A1	1.25	2.00
5.55	**118135**	6A4.8B5.2–1615	11.0	A1	1.25	2.00
5.75	**118136**	6A5.0B5.4–2517	12.0	A1	1.12	1.87
5.95	**118137**	6A5.2B5.6–2517	13.0	A1	1.12	1.87
6.15	**118365**	6A5.4B5.8–2517	14.0	A1	1.12	1.87
6.35	**118139**	6A5.6B6.0–2517	15.0	A1	1.12	1.87
6.55	**118366**	6A5.8B6.2–2517	16.0	A1	1.12	1.87
6.75	**118141**	6A6.0B6.4–2517	19.0	A1	1.12	1.87
6.95	**118367**	6A6.2B6.6–2517	20.0	A1	1.12	1.87
7.15	**118143**	6A6.4B6.8–2517	20.0	A1	1.12	1.87
7.35	**118368**	6A6.6B7.0–2517	21.0	A1	1.50	1.50
7.75	**118144**	6A7.0B7.4–2517	24.0	A1	1.12	1.87
8.35	**118369**	6A7.6B8.0–2517	26.0	A1	1.50	1.50
8.95	**118145**	6A8.2B8.6–2517	30.0	A2	1.50	1.50
9.75	**118146**	6A9.0B9.4–2517	30.0	A2	1.12	1.87
11.35	**118147**	6A10.6B11.0–2517	33.0	A2	1.12	1.87
12.75	**118148**	6A12.0B12.4–2517	37.0	A3	1.50	1.50
13.95	**118370**	6A13.2B13.6–2517	42.0	A3	1.50	1.50
15.75	**118149**	6A15.0B15.4–2517	47.0	A3	1.50	1.50
16.35	**118371**	6A15.6B16.0–2517	53.0	A3	1.50	1.50
18.75	**118150**	6A18.0B18.4–2517	68.0	A3	1.50	1.50
20.35	**114060**	6B20.0–3030	73.0	A3	.50	1.25
25.35	**114061**	6B25.0–3030	95.0	A3	.50	1.25
30.35	**114062**	6B30.0–3030	119.0	A3	.50	1.25
38.35	**114063**	6B38.0–3030	164.0	A3	.50	1.25

Δ P.D. for "A" Belts = O.D. – .37"
P.D. for "B" Belts = O.D. +.01"

‡ **Type 1 = Block Type, 2 = Web, 3 = Arm – See page PT7-2.**

SELECTION/DIMENSIONS

B TAPER-LOCK SHEAVES

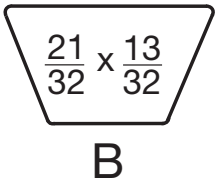

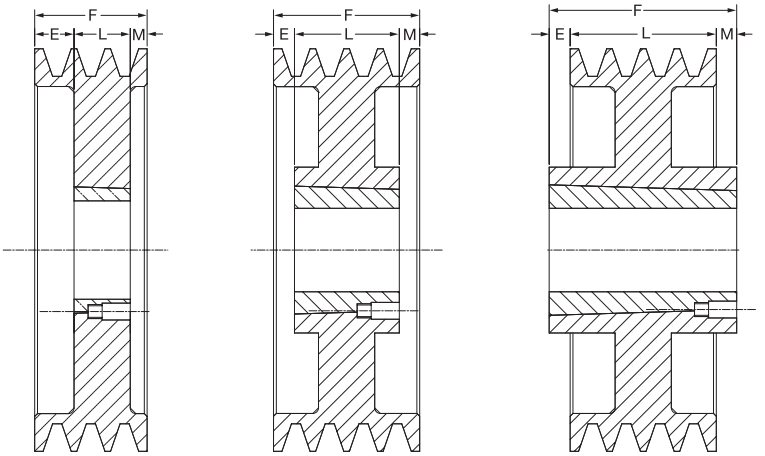

8-Groove						F = 6.25
O.D.Δ	Part No.	Description	Wt.	Type‡	E	M
5.75	**114114**	8B5.4–2517	15.0	A1	1.87	2.62
5.95	**114115**	8B5.6–2517	17.0	A1	1.87	2.62
6.35	**114116**	8B6.0–2517	19.0	A1	1.87	2.62
6.75	**114117**	8B6.4–2517	22.0	A1	1.87	2.62
7.15	**114118**	8B6.8–2517	26.0	A1	1.87	2.62
7.75	**114119**	8B7.4–2517	34.0	A1	1.87	2.62
8.95	**114130**	8B8.6–3030	37.0	A1	1.00	2.25
9.75	**114131**	8B9.4–3030	37.0	A1	1.00	2.25
11.35	**114132**	8B11.0–3030	46.0	A1	1.13	2.13
12.75	**114133**	8B12.4–3030	46.0	A2	1.00	2.25
15.75	**114134**	8B15.4–3030	66.0	A2	1.00	2.25
18.75	**114135**	8B18.4–3030	81.0	A3	1.00	2.25
20.35	**114136**	8B20.0–3030	87.0	A3	1.00	2.25
25.35	**114137**	8B25.0–3535	115.0	A3	.75	2.00
30.35	**114138**	8B30.0–3535	146.0	A3	.75	2.00
38.35	**114139**	8B38.0–4040	204.0	A3	1.12	1.12

10-Groove						F = 7.75
O.D.Δ	Part No.	Description	Wt.	Type‡	E	M
5.75	**114150**	10B5.4–2517	18.0	A1	3.00	3.00
5.95	**114151**	10B5.6–2517	20.0	A1	3.00	3.00
6.35	**114152**	10B6.0–2517	22.0	A1	3.00	3.00
6.75	**114153**	10B6.4–2517	26.0	A1	3.00	3.00
7.15	**114154**	10B6.8–2517	29.0	A1	3.00	3.00
7.75	**114155**	10B7.4–2517	35.0	A1	3.00	3.00
8.95	**114170**	10B8.6–3030	43.0	A1	2.00	2.75
9.75	**114171**	10B9.4–3030	47.0	A1	2.00	2.75
11.35	**114172**	10B11.0–3030	58.0	A1	2.00	2.75

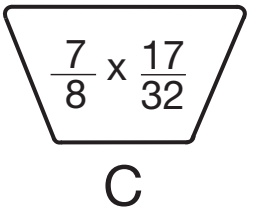

C TAPER-LOCK SHEAVES

2-Groove						F = 2.37
O.D.Δ	Part No.	Description	Wt.	Type‡	E	M
7.4	**115162**	2C7.0–2517	15.0	A1	0	.62
7.9	**115163**	2C7.5–2517	18.0	A1	0	.62
8.4	**115164**	2C8.0–2517	20.0	A1	0	.62
8.9	**115165**	2C8.5–2517	22.0	A1	0	.62
9.4	**115166**	2C9.0–2517	21.0	A1	0	.62
9.9	**115186**	2C9.5–2517	24.0	A1	0	.62
10.4	**115171**	2C10.0–2517	25.0	A2	0	.62
10.9	**115187**	2C10.5–2517	26.0	A2	0	.62
11.4	**115174**	2C11.0–2517	27.0	A2	0	.62
12.4	**115175**	2C12.0–2517	28.0	A2	0	.62
13.4	**115176**	2C13.0–2517	33.0	A3	0	.62
14.4	**115177**	2C14.0–2517	35.0	A3	0	.62
16.4	**115178**	2C16.0–2517	38.0	A3	0	.62
18.4	**115325**	2C18.0–3020	42.0	A3	0	.37
20.4	**115326**	2C20.0–3020	44.0	A3	0	.37
24.4	**115327**	2C24.0–3020	56.0	A3	0	.37
30.4	**115000**	2C30.0–3535	85.0	C3	.50	.63

3-Groove						F = 3.37
O.D.Δ	Part No.	Description	Wt.	Type‡	E	M
7.4	**115130**	3C7.0–2517	18.0	A1	.25	1.37
7.9	**115131**	3C7.5–2517	19.0	A1	.25	1.37
8.4	**115132**	3C8.0–2517	21.0	A1	0	1.62
8.9	**115133**	3C8.5–2517	23.0	A1	.25	1.37
9.4	**115001**	3C9.0–2517	24.0	A1	.25	1.37
9.9	**115188**	3C9.5–2517	25.0	A1	.25	1.37
10.4	**115016**	3C10.0–2517	27.0	A1	.25	1.37
10.9	**115189**	3C10.5–2517	28.0	A1	.25	1.37
11.4	**115006**	3C11.0–2517	29.0	A1	.25	1.37
12.4	**115328**	3C12.0–3020	44.0	A2	0	1.37
13.4	**115329**	3C13.0–3020	49.0	A3	0	1.37
14.4	**115330**	3C14.0–3020	50.0	A3	0	1.37
16.4	**115331**	3C16.0–3020	64.0	A3	.06	1.31
18.4	**115014**	3C18.0–3030	72.0	A3	0	.37
20.4	**115009**	3C20.0–3030	79.0	A3	0	.37
24.4	**115010**	3C24.0–3030	90.0	A3	0	.37
30.4	**115011**	3C30.0–3535	135.0	C3	0	.12
36.4	**115012**	3C36.0–3535	175.0	C3	0	.12

Δ P.D. for "B" Belts = O.D. + .01"
P.D. for "C" Belts = O.D.

‡ **Type 1 = Block Type, 2 = Web, 3 = Arm – See page PT7-2.**

C TAPER-LOCK SHEAVES

4-Groove — F = 4.37

O.D.Δ	Part No.	Description	Wt.	Type‡	E	M
7.4	**115135**	4C7.0–2517	20.0	A1	1.12	1.50
7.9	**115136**	4C7.5–2517	21.0	A1	1.13	1.50
8.4	**115137**	4C8.0–2517	24.0	A1	.50	2.13
8.9	**115138**	4C8.5–2517	25.0	A1	.50	2.13
9.4	**115017**	4C9.0–2517	26.0	A1	.50	2.13
9.9	**115190**	4C9.5–2517	29.0	A1	.50	2.13
10.4	**115032**	4C10.0–2517	31.0	A1	.50	2.13
10.9	**115191**	4C10.5–2517	32.0	A1	.50	2.13
11.4	**115022**	4C11.0–2517	34.0	A1	.50	2.13
12.4	**115151**	4C12.0–3030	52.0	A2	0	1.37
13.4	**115023**	4C13.0–3030	56.0	A3	0	1.37
14.4	**115155**	4C14.0–3030	63.0	A3	0	1.37
16.4	**115024**	4C16.0–3030	71.0	A3	0	1.37
18.4	**115030**	4C18.0–3030	81.0	A3	.18	1.18
20.4	**115025**	4C20.0–3030	80.0	A3	0	1.37
24.4	**115026**	4C24.0–3030	98.0	A3	0	1.37
30.4	**115027**	4C30.0–3535	130.0	A3	.31	.56
36.4	**115028**	4C36.0–3535	165.0	A3	0	.87
44.4	**115029**	4C44.0–4040	240.0	A3	0	.37

5-Groove — F = 5.37

O.D.Δ	Part No.	Description	Wt.	Type‡	E	M
7.4	**115140**	5C7.0–2517	23.0	A1	1.50	2.12
7.9	**115141**	5C7.5–2517	25.0	A1	1.50	2.12
8.4	**115142**	5C8.0–2517	30.0	A1	1.50	2.12
8.9	**115143**	5C8.5–2517	32.0	A1	1.50	2.12
9.4	**115033**	5C9.0–2517	35.0	A1	1.50	2.12
9.9	**115192**	5C9.5–2517	36.0	A1	1.50	2.12
10.4	**115048**	5C10.0–2517	39.0	A1	1.50	2.12
10.9	**115193**	5C10.5–2517	42.0	A1	1.50	2.12
11.4	**115038**	5C11.0–2517	43.0	A1	1.50	2.12
12.4	**115152**	5C12.0–3030	58.0	A1	.69	1.69
13.4	**115039**	5C13.0–3030	63.0	A2	.50	1.87
14.4	**115156**	5C14.0–3030	65.0	A2	.50	1.87
16.4	**115040**	5C16.0–3030	86.0	A3	.50	1.87
18.4	**115036**	5C18.0–3030	105.0	A3	.69	1.69
20.4	**115041**	5C20.0–3535	91.0	A3	0	1.87
24.4	**115042**	5C24.0–3535	114.0	A3	.37	1.50
30.4	**115043**	5C30.0–3535	152.0	A3	.38	1.50
36.4	**115044**	5C36.0–4040	216.0	A3	.25	1.12
44.4	**115045**	5C44.0–4040	278.0	A3	.25	1.12

6-Groove — F = 6.37

O.D.Δ	Part No.	Description	Wt.	Type‡	E	M
7.4	**115145**	6C7.0–3030	33.0	A1	1.00	2.37
7.9	**115146**	6C7.5–3030	38.0	A1	1.00	2.37
8.4	**115147**	6C8.0–3030	43.0	A1	1.00	2.37
8.9	**115148**	6C8.5–3030	49.0	A1	1.00	2.37
9.4	**115049**	6C9.0–3030	54.0	A1	1.00	2.37
9.9	**115194**	6C9.5–3030	57.0	A1	1.00	2.37
10.4	**115064**	6C10.0–3030	61.0	A1	1.00	2.37
10.9	**115195**	6C10.5–3030	56.0	A1	1.00	2.37
11.4	**115054**	6C11.0–3030	58.0	A1	1.00	2.37
12.4	**115153**	6C12.0–3030	66.0	A1	1.00	2.37
13.4	**115055**	6C13.0–3030	69.0	A2	1.00	2.37
14.4	**115157**	6C14.0–3535	85.0	A2	.50	2.37
16.4	**115056**	6C16.0–3535	100.0	A3	.50	2.37
18.4	**115062**	6C18.0–3535	115.0	A3	.75	2.12
20.4	**115057**	6C20.0–3535	103.0	A3	.87	2.00
24.4	**115058**	6C24.0–3535	129.0	A3	.87	2.00
30.4	**115059**	6C30.0–4040	195.0	A3	1.00	1.37
36.4	**115060**	6C36.0–4040	243.0	A3	1.00	1.37
44.4	**115061**	6C44.0–4040	315.0	A3	1.00	1.37

8-Groove — F = 8.37

O.D.Δ	Part No.	Description	Wt.	Type‡	E	M
8.4	**115160**	8C8.0–3030	59.0	A1	2.00	3.37
8.9	**115161**	8C8.5–3030	62.0	A1	2.00	3.37
9.4	**115081**	8C9.0–3535	64.0	A1	1.50	3.37
9.9	**115196**	8C9.5–3535	73.0	A1	1.50	3.37
10.4	**115096**	8C10.0–3535	81.0	A1	1.50	3.37
10.9	**115197**	8C10.5–3535	85.0	A1	1.50	3.37
11.4	**115086**	8C11.0–3535	87.0	A1	1.50	3.37
12.4	**115185**	8C12.0–3535	90.0	A1	1.50	3.37
13.4	**115087**	8C13.0–3535	97.0	A1	1.50	3.37
14.4	**115097**	8C14.0–3535	105.0	A1	1.50	3.37
16.4	**115088**	8C16.0–3535	125.0	A3	1.50	3.37
18.4	**115098**	8C18.0–4040	155.0	A3	1.50	2.87
20.4	**115089**	8C20.0–4040	151.0	A3	1.50	2.87
24.4	**115090**	8C24.0–4040	183.0	A3	1.50	2.87
30.4	**115091**	8C30.0–4040	237.0	A3	1.50	2.87
36.4	**115092**	8C36.0–4545	322.0	A3	1.25	2.62
44.4	**115093**	8C44.0–4545	411.0	A3	1.25	2.62

10-Groove — F = 10.37

O.D.Δ	Part No.	Description	Wt.	Type‡	E	M
9.4	**115351**	10C9.0–4545	84.0	A1	1.50	4.37
9.9	**115352**	10C9.5–4545	101.0	A1	1.50	4.37
10.4	**115353**	10C10.0–4545	104.0	A1	1.50	4.37
10.9	**115354**	10C10.5–4545	108.0	A1	1.50	4.37
11.4	**115355**	10C11.0–4545	128.0	A1	1.50	4.37
12.4	**115356**	10C12.0–4545	148.0	A1	1.50	4.37
13.4	**115349**	10C13.0–4545	168.0	A1	2.00	3.87
14.4	**115357**	10C14.0–4545	205.0	A1	2.00	3.87
16.4	**115358**	10C16.0–4545	237.0	A1	2.00	3.87
18.4	**115359**	10C18.0–4545	270.0	A3	2.00	3.87
20.4	**115360**	10C20.0–4545	176.0	A3	2.00	3.87
24.4	**115361**	10C24.0–5050	242.0	A3	1.50	3.87
30.4	**115123**	10C30.0–4545	303.0	A3	2.00	3.87
36.4	**115124**	10C36.0–4545	375.0	A3	2.00	3.87
44.4	**115125**	10C44.0–4545	484.0	A3	2.00	3.87

12-Groove — F = 12.37

O.D.Δ	Part No.	Description	Wt.	Type‡	E	M
9.4	**115065**	12C9.0–4040	87.0	A1	3.50	4.87
9.9	**115066**	12C9.5–4040	90.0	A1	3.50	4.87
10.4	**115067**	12C10.0–4040	95.0	A1	3.50	4.87
10.9	**115068**	12C10.5–4040	104.0	A1	3.50	4.87
11.4	**115069**	12C11.0–4040	125.0	A1	3.50	4.87
12.4	**115070**	12C12.0–4040	140.0	A1	3.50	4.87
13.4	**115071**	12C13.0–4545	173.0	A1	3.00	4.87
14.4	**115072**	12C14.0–4545	177.0	A1	3.00	4.87

Δ P.D. for "C" Belts = O.D.

‡ **Type 1 = Block Type, 2 = Web, 3 = Arm – See page PT7-2.**

SELECTION/DIMENSIONS

3V QD SHEAVES - Heavy Duty

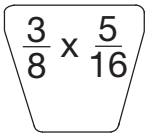

1-Groove — F = *

O.D.Δ	Part No.	Description	Wt.	Type‡	M	K
2.2	**455100**	1/3V2.2–JA	0.93	E1	0.50	0.51
2.35	**455101**	1/3V2.35–JA	1.1	E1	0.50	0.51
2.5	**455102**	1/3V2.5–JA	1.2	E1	0.50	0.51
2.65	**455103**	1/3V2.65–JA	1.4	D1	0.14	0.37
2.8	**455104**	1/3V2.8–JA	1.5	D1	0.14	0.37
3.0	**455105**	1/3V3.00–JA	1.6	D1	0.14	0.37
3.15	**455106**	1/3V3.15–JA	1.7	D1	0.14	0.37
3.35	**455107**	1/3V3.35–JA	1.8	D1	0.14	0.37
3.65	**455108**	1/3V3.65–SH	2.2	D1	0.11	0.57
4.12	**455109**	1/3V4.12–SH	2.7	D1	0.05	0.63
4.5	**455110**	1/3V4.5–SH	3.1	D1	0.05	0.63
4.75	**455111**	1/3V4.75–SH	3.4	D1	0.05	0.63
5.0	**455112**	1/3V5.0–SH	3.7	C1	0.00	0.68
5.3	**455113**	1/3V5.3–SH	3.9	C1	0.00	0.68
5.6	**455114**	1/3V5.6–SH	4.4	C1	0.00	0.68
6.0	**455115**	1/3V6.0–SH	4.5	C1	0.00	0.68
6.5	**455116**	1/3V6.5–SH	4.6	C1	0.00	0.68
6.9	**455117**	1/3V6.9–SH	4.8	C1	0.00	0.68
8.0	**455118**	1/3V8.0–SDS	6.6	C1	0.06	0.64
10.6	**455119**	1/3V10.6–SDS	8.5	C2	0.12	0.58
14.0	**455120**	1/3V14.0–SK	14.0	C3	0.44	1.33
19.0	**455121**	1/3V19.0–SK	20.0	C3	0.16	1.05

* F=1.19 2.2 – 2.5, F=1.09 2.65 – 3.65 & 14.0 – 19.0, F=0.93 4.12 – 4.75, F=0.81 5.0 – 6

2-Groove — F = 1.09

O.D.Δ	Part No.	Description	Wt.	Type‡	M	K
2.2	**455122**	2/3V2.2–JA	1.2	E1	0.50	0.51
2.35	**455123**	2/3V2.35–JA	1.3	E1	0.50	0.51
2.5	**455124**	2/3V2.5–JA	1.5	E1	0.50	0.51
2.65	**455125**	2/3V2.65–JA	1.6	D1	0.14	0.37
2.8	**455126**	2/3V2.8–JA	1.7	D1	0.14	0.37
3.0	**455127**	2/3V3.0–JA	2.0	D1	0.14	0.37
3.15	**455128**	2/3V3.15–JA	2.1	D1	0.14	0.37
3.35	**455129**	2/3V3.35–SH	2.2	D1	0.11	0.57
3.65	**455130**	2/3V3.65–SH	2.6	D1	0.11	0.57
4.12	**455131**	2/3V4.12–SH	3.2	C1	0.28	0.40
4.5	**455132**	2/3V4.5–SH	3.8	C1	0.28	0.40
4.75	**455133**	2/3V4.75–SH	4.1	C1	0.28	0.40
5.0	**455134**	2/3V5.0–SH	4.6	C1	0.28	0.40
5.3	**455135**	2/3V5.3–SH	5.1	C1	0.28	0.40
5.6	**455136**	2/3V5.6–SH	5.6	C1	0.28	0.40
6.0	**455137**	2/3V6.0–SH	5.8	C1	0.12	0.56
6.5	**455138**	2/3V6.5–SDS	6.0	C1	0.34	0.36
6.9	**455139**	2/3V6.9–SDS	6.6	C1	0.34	0.36
8.0	**455140**	2/3V8.0–SDS	7.8	C1	0.34	0.36
10.6	**455141**	2/3V10.6–SK	14.0	C1	0.25	0.64
14.0	**455142**	2/3V14.0–SK	17.0	D3	0.25	0.64
19.0	**455143**	2/3V19.0–SK	24.0	D3	0.00	0.89
25.0	**455144**	2/3V25.0–SF	29.0	D3	0.18	0.76

3-Groove — F = 1.50

O.D.Δ	Part No.	Description	Wt.	Type‡	M	K
2.5	**455145**	3/3V2.50–JA	1.9	E1	0.44	0.51
2.65	**455146**	3/3V2.65–JA	1.9	E1	0.00	0.51
2.8	**455147**	3/3V2.80–JA	2.2	E1	0.00	0.51
3.0	**455148**	3/3V3.00–SH	2.6	E1	0.52	0.68
3.15	**455149**	3/3V3.15–SH	2.8	E1	0.52	0.68
3.35	**455150**	3/3V3.35–SH	3.0	D1	0.11	0.57
3.65	**455151**	3/3V3.65–SH	3.2	D1	0.11	0.57
4.12	**455152**	3/3V4.12–SH	3.6	B1	0.69	0.01
4.5	**455153**	3/3V4.50–SDS	4.3	B1	0.75	0.05
4.75	**455154**	3/3V4.75–SDS	4.8	B1	0.75	0.05
5.0	**455155**	3/3V5.0–SDS	5.1	B1	0.75	0.05
5.3	**455156**	3/3V5.3–SDS	5.8	B1	0.75	0.05
5.6	**455157**	3/3V5.6–SDS	6.5	B1	0.75	0.05
6.0	**455158**	3/3V6.0–SDS	7.5	D1	0.56	0.14
6.5	**455159**	3/3V6.5–SDS	7.8	B1	0.75	0.05
6.9	**455160**	3/3V6.9–SDS	8.0	B1	0.75	0.05
8.0	**455161**	3/3V8.0–SK	12.0	C1	0.25	0.64
10.6	**455162**	3/3V10.6–SK	15.0	D2	0.25	0.64
14.0	**455163**	3/3V14.0–SK	21.0	C3	0.25	0.64
19.0	**455164**	3/3V19.0–SF	36.0	C3	0.25	0.69
25.0	**455165**	3/3V25.0–SF	35.0	C3	0.25	0.69
33.5	**455166**	3/3V33.5–SF	52.0	C3	0.25	0.69

4-Groove — F = 1.90

O.D.Δ	Part No.	Description	Wt.	Type‡	M	K
2.65	**455167**	4/3V2.65–JA	2.2	E1	0.00	0.51
2.8	**455168**	4/3V2.8–JA	2.4	E1	0.00	0.51
3.0	**455169**	4/3V3.0–SH	2.8	E1	0.38	0.68
3.15	**455170**	4/3V3.15–SH	3.1	E1	0.38	0.68
3.35	**455171**	4/3V3.35–SH	3.3	E1	0.38	0.68
3.65	**455172**	4/3V3.65–SH	3.8	E1	0.38	0.68
4.12	**455173**	4/3V4.12–SH	4.1	A1	1.09	0.41
4.5	**455174**	4/3V4.5–SDS	4.6	A1	1.15	0.45
4.75	**455175**	4/3V4.75–SDS	5.3	A1	1.15	0.45
5.0	**455176**	4/3V5.0–SDS	5.6	A1	1.15	0.45
5.3	**455177**	4/3V5.3–SDS	6.4	A1	1.15	0.45
5.6	**455178**	4/3V5.6–SDS	6.9	A1	1.15	0.45
6.0	**455179**	4/3V6.0–SK	9.4	D1	0.50	0.39
6.5	**455180**	4/3V6.5–SK	9.5	C1	0.66	0.23
6.9	**455181**	4/3V6.9–SK	11.0	C1	0.66	0.23
8.0	**455182**	4/3V8.0–SK	13.0	C1	0.66	0.23
10.6	**455183**	4/3V10.6–SK	18.0	D2	0.66	0.23
14.0	**455184**	4/3V14.0–SK	24.0	D3	0.63	0.27
19.0	**455185**	4/3V19.0–SF	40.0	D3	0.50	0.44
25.0	**455186**	4/3V25.0–SF	41.0	D3	0.63	0.31
33.5	**455187**	4/3V33.5–E	65.0	C3	0.34	0.86

Δ Pitch Diameter = O.D. – .05”

‡ **Type 1 = Block Type, 2 = Web, 3 = Arm – See page PT7-2.**

3V QD SHEAVES - Heavy Duty

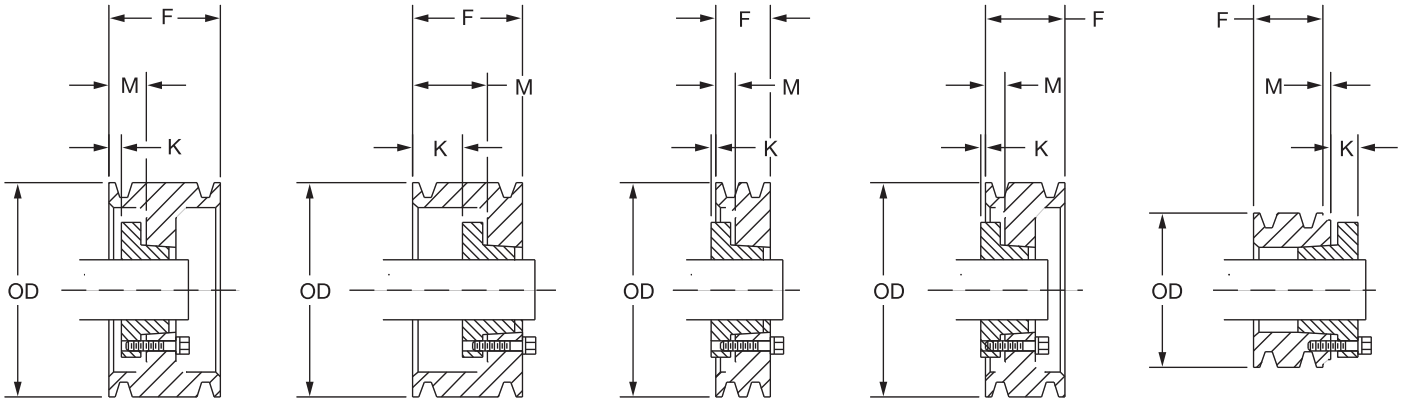

TYPE A TYPE B TYPE C TYPE D TYPE E

5-Groove — **F = 2.31**

O.D.Δ	Part No.	Description	Wt.	Type‡	M	K
4.75	**455188**	5/3V4.75–SDS	5.9	A1	0.75	0.05
5.0	**455189**	5/3V5.0–SDS	6.3	A1	0.75	0.05
5.3	**455190**	5/3B5.3–SK	8.0	A1	0.94	0.05
5.6	**455191**	5/3V5.6–SK	9.0	A1	0.94	0.05
6.0	**455192**	5/3V6.0–SK	11.0	A1	0.94	0.05
6.5	**455193**	5/3V6.5–SK	11.0	A1	0.94	0.05
6.9	**455194**	5/3V6.9–SK	12.0	A1	0.94	0.05
8.0	**455195**	5/3V8.0–SK	15.0	A1	0.94	0.05
10.6	**455196**	5/3V10.6–SK	20.0	A1	0.94	0.05
14.0	**455197**	5/3V14.0–SF	31.0	D3	0.63	0.32
19.0	**455198**	5/3V19.0–SF	46.0	D3	0.63	0.31
25.0	**455199**	5/3V25.0–E	50.0	C3	0.63	0.57
33.5	**455200**	5/3V33.5–E	74.0	C3	0.63	0.57

6-Groove — **F = 2.72**

O.D.Δ	Part No.	Description	Wt.	Type‡	M	K
4.75	**455201**	6/3V4.75–SK	7.1	E1	0.00	0.89
5.0	**455202**	6/3V5.0–SK	7.8	E1	0.00	0.89
5.3	**455203**	6/3V5.3–SK	8.6	A1	1.31	0.42
5.6	**455204**	6/3V5.6–SK	8.8	A1	1.31	0.42
6.0	**455205**	6/3V6.0–SK	11.0	A1	1.31	0.42
6.5	**455206**	6/3V6.5–SK	12.0	A1	1.31	0.42
6.9	**455207**	6/3V6.9–SK	13.0	A1	1.31	0.42
8.0	**455208**	6/3V8.0–SK	17.0	D1	0.59	0.30
10.6	**455209**	6/3V10.6–SF	23.0	D1	0.88	0.07
14.0	**455210**	6/3V14.0–SF	33.0	D3	0.88	0.06
19.0	**455211**	6/3V19.0–E	62.0	D3	0.88	0.32
25.0	**455212**	6/3V25.0–E	56.0	D3	1.00	0.20
33.5	**455213**	6/3V33.5–E	83.0	D3	1.00	0.20

8-Groove — **F = 3.53**

O.D.Δ	Part No.	Description	Wt.	Type‡	M	K
4.75	**455214**	8/3V4.75–SK	8.4	E1	0.00	0.89
5.0	**455215**	8/3V5.0–SK	8.6	E1	0.00	0.89
5.3	**455216**	8/3V5.3–SK	10.0	A1	1.31	0.42
5.6	**455217**	8/3V5.6–SK	11.0	A1	1.31	0.42
6.0	**455218**	8/3V6.0–SK	13.0	A1	1.31	0.42
6.5	**455219**	8/3V6.5–SK	15.0	A1	1.31	0.42
6.9	**455220**	8/3V6.9–SK	15.0	A1	1.53	0.64
8.0	**455221**	8/3V8.0–SF	20.0	A1	1.31	0.37
10.6	**455222**	8/3V10.6–SF	29.0	A2	1.12	0.18
14.0	**455223**	8/3V14.0–E	51.0	A3	1.25	0.05
19.0	**455224**	8/3V19.0–E	70.0	D3	1.12	0.08
25.0	**455225**	8/3V25.0–E	67.0	A3	1.25	0.05
33.5	**455226**	8/3V33.5–F	98.0	D3	1.06	0.36

10-Groove — **F = 4.34**

O.D.Δ	Part No.	Description	Wt.	Type‡	M	K
4.75	**455227**	10/3V4.75–SK	9.7	E1	0.00	0.89
5.0	**455228**	10/3V5.0–SK	11.0	E1	0.00	0.89
5.3	**455229**	10/3V5.3–SK	12.0	A1	1.44	0.55
5.6	**455230**	10/3V5.6–SK	13.0	A1	1.44	0.55
6.0	**455231**	10/3V6.0–SK	15.0	A1	1.44	0.55
6.5	**455232**	10/3V6.5–SK	16.0	A1	1.44	0.55
6.9	**455233**	10/3V6.9–SK	18.0	A1	1.44	0.55
8.0	**455234**	10/3V8.0–SF	22.0	A1	1.63	0.69
10.6	**455235**	10/3V10.6–E	41.0	A1	1.25	0.05
14.0	**455236**	10/3V14.0–E	55.0	A2	1.25	0.05
19.0	**455237**	10/3V19.0–E	80.0	A3	1.25	0.05
25.0	**455238**	10/3V25.0–F	83.0	D3	1.31	0.11
33.5	**455239**	10/3V33.5–F	124.0	D3	1.31	0.11

Δ Pitch Diameter = O.D. – .05”

‡ **Type 1 = Block Type, 2 = Web, 3 = Arm – See page PT7-2.**

SELECTION/DIMENSIONS

5V QD SHEAVES - Heavy Duty

2-Groove — F = 1.69

O.D.Δ	Part No.	Description	Wt.	Type‡	M	K
++4.4	**455240**	2/5V4.4–SH	4.0	D1	0.19	0.49
++4.65	**455241**	2/5V4.65–SDS	4.4	E1	0.19	0.70
++4.9	**455242**	2/5V4.9–SDS	5.1	E1	0.19	0.51
++5.2	**455243**	2/5V5.2–SDS	5.7	D1	0.69	0.01
++5.5	**455244**	2/5V5.5–SDS	5.9	D1	0.69	0.01
++5.9	**455245**	2/5V5.9–SDS	6.8	D1	0.69	0.01
++6.3	**455246**	2/5V6.3–SK	10.0	C1	0.44	0.45
++6.7	**455247**	2/5V6.7–SK	13.0	C1	0.44	0.45
7.1	**455248**	2/5V7.1–SK	10.0	C1	0.44	0.45
7.5	**455249**	2/5V7.5–SK	12.0	C1	0.44	0.45
8.0	**455250**	2/5V8.0–SK	10.0	C1	0.44	0.45
8.5	**455251**	2/5V8.5–SK	11.0	C2	0.44	0.45
9.0	**455252**	2/5V9.0–SK	12.0	C2	0.44	0.45
9.25	**455253**	2/5V9.25–SK	13.0	C1	0.44	0.45
9.75	**455254**	2/5V9.75–SK	13.0	C1	0.44	0.45
10.3	**455255**	2/5V10.3–SK	15.0	C2	0.44	0.45
10.9	**455256**	2/5V10.9–SK	16.0	C2	0.44	0.45
11.3	**455257**	2/5V11.3–SK	19.0	C2	0.44	0.45
11.8	**455258**	2/5V11.8–SK	18.0	C2	0.44	0.45
12.5	**455259**	2/5V12.5–SF	20.0	C2	0.44	0.50
13.2	**455260**	2/5V13.2–SF	21.0	D3	0.31	0.63
14.0	**455261**	2/5V14.0–SF	23.0	D3	0.31	0.63
15.0	**455262**	2/5V15.0–SF	26.0	D3	0.31	0.63
16.0	**455263**	2/5V16.0–SF	29.0	D3	0.31	0.63
18.7	**455264**	2/5V18.7–SF	39.0	D3	0.31	0.63
21.2	**455265**	2/5V21.2–SF	39.0	C3	0.44	0.50
23.6	**455266**	2/5V23.6–E	48.0	D3	0.25	0.95
28.0	**455267**	2/5V28.0–E	60.0	D3	0.25	0.95
31.5	**- - -**	- - -	- - -	- - -	- - -	- - -
37.5	**- - -**	- - -	- - -	- - -	- - -	- - -
50.0	**- - -**	- - -	- - -	- - -	- - -	- - -

3-Groove — F = 2.38

O.D.Δ	Part No.	Description	Wt.	Type‡	M	K
++4.4.	**455268**	3/5V4.4–SDS	5.7	E1	0.00	0.70
++4.65	**455269**	3/5V4.65–SDS	6.2	E1	0.00	0.70
++4.9	**455270**	3/5V4.9–SDS	6.3	A1	1.06	0.36
++5.2	**455271**	3/5V5.2–SDS	6.8	A1	1.06	0.36
++5.5	**455272**	3/5V5.5–SDS	7.7	A1	1.06	0.36
++5.9	**455273**	3/5V5.9–SDS	8.3	A1	1.06	0.36
++6.3	**455274**	3/5V6.3–SK	12.0	B1	1.13	0.24
++6.7	**455275**	3/5V6.7–SK	13.0	B1	1.13	0.24
7.1	**455276**	3/5V7.1–SF	15.0	A1	1.00	0.06
7.5	**455277**	3/5V7.5–SF	17.0	A1	1.00	0.06
8.0	**455278**	3/5V8.0–SF	19.0	A1	1.00	0.06
8.5	**455279**	3/5V8.5–SF	21.0	D1	0.81	0.13
9.0	**455280**	3/5V9.0–SF	22.0	D1	0.81	0.13
9.25	**455281**	3/5V9.25–SF	23.0	A1	1.00	0.06
9.75	**455282**	3/5V9.75–SF	23.0	A2	1.13	0.19
10.3	**455284**	3/5V10.3–SF	25.0	A2	1.00	0.06
10.9	**455285**	3/5V10.9–SF	27.0	D2	0.81	0.13
11.3	**455286**	3/5V11.3–SF	25.0	D2	0.81	0.13
11.8	**455287**	3/5V11.8–SF	28.0	A2	1.00	0.06
12.5	**455288**	3/5V12.5–E	36.0	D2	0.56	0.64
13.2	**455289**	3/5V13.2–E	38.0	C2	0.75	0.45
14.0	**455290**	3/5V14.0–E	46.0	D3	0.56	0.64
15.0	**455291**	3/5V15.0–E	48.0	D3	0.63	0.57
16.0	**455292**	3/5V16.0–E	50.0	D3	0.63	0.57
18.7	**455293**	3/5V18.7–E	54.0	D3	0.50	0.70
21.2	**455294**	3/5V21.2–E	62.0	C3	0.75	0.45
23.6	**455295**	3/5V23.6–E	79.0	C3	0.75	0.45
28.0	**455296**	3/5V28.0–E	85.0	C3	0.75	0.45
31.5	**455297**	3/5V31.5–F	124.0	D3	0.56	0.86
37.5	**455298**	3/5V37.5–F	143.0	D3	0.56	0.86
50.0	**455299**	3/5V50.0–F	218.0	D3	0.31	1.11

4-Groove — F = 3.06

O.D.Δ	Part No.	Description	Wt.	Type‡	M	K
++4.4	**455300**	4/5V4.40–SD	6.8	E1	0.00	0.70
++4.65	**455301**	4/5V4.65–SD	7.7	E1	0.00	0.70
++4.9	**455302**	4/5V4.90–SD	8.0	A1	1.31	0.61
++5.2	**455303**	4/5V5.20–SD	8.7	A1	1.31	0.61
++5.5	**455304**	4/5V5.50–SD	9.7	A1	1.31	0.61
++5.9	**455305**	4/5V5.90–SD	11.0	A1	1.31	0.61
++6.3	**455306**	4/5V6.30–SK	13.0	A1	1.31	0.42
++6.7	**455307**	4/5V6.70–SK	14.0	A1	1.31	0.42
7.1	**455308**	4/5V7.1–SF	17.0	A1	1.31	0.37
7.5	**455309**	4/5V7.5–SF	20.0	A1	1.06	0.12
8.0	**455310**	4/5V8.0–E	28.0	B1	1.44	0.24
8.5	**455311**	4/5V8.5–E	30.0	B1	1.44	0.24
9.0	**455312**	4/5V9.0–E	33.0	B1	1.44	0.24
9.25	**455313**	4/5V9.25–E	36.0	B1	1.44	0.24
9.75	**455314**	4/5V9.75–E	36.0	B1	1.44	0.24
10.3	**455315**	4/5V10.3–E	37.0	B1	1.44	0.24
10.9	**455316**	4/5V10.9–E	40.0	B1	1.44	0.24
11.3	**455317**	4/5V11.3–E	39.0	B1	1.44	0.24
11.8	**455318**	4/5V11.8–E	42.0	B2	1.44	0.24
12.5	**455319**	4/5V12.5–E	43.0	B2	1.44	0.24
13.2	**455320**	4/5V13.2–E	44.0	A3	1.06	0.14
14.0	**455321**	4/5V14.0–E	47.0	A3	1.31	0.11
15.0	**455322**	4/5V15.0–E	50.0	A3	1.31	0.11
16.0	**455323**	4/5V16.0–E	51.0	A3	1.31	0.11
18.7	**455324**	4/5V18.7–E	63.0	A3	1.31	0.11
21.2	**455325**	4/5V21.2–E	62.0	D3	0.88	0.32
23.6	**455326**	4/5V23.6–F	75.0	D3	0.88	0.54
28.0	**455327**	4/5V28.0–F	94.0	D3	0.88	0.54
31.5	**455328**	4/5V31.5–F	111.0	D3	0.88	0.54
37.5	**455329**	4/5V37.5–F	144.0	D3	0.88	0.54
50.0	**455330**	4/5V50.0–J	267.0	D3	0.69	0.91

5-Groove — F = 3.75

O.D.Δ	Part No.	Description	Wt.	Type‡	M	K
++4.4	**455331**	5/5V4.4–SD	8.0	E1	0.00	0.70
++4.65	**455332**	5/5V4.65–SD	8.5	E1	0.00	0.70
++4.9	**455333**	5/5V4.9–SD	10.0	E1	0.00	0.70
++5.2	**455334**	5/5V5.2–SD	11.0	A1	1.31	0.61
++5.5	**455335**	5/5V5.5–SD	11.0	A1	1.31	0.61
++5.9	**455336**	5/5V5.9–SK	13.0	A1	1.31	0.42
++6.3	**455337**	5/5V6.3–SK	15.0	A1	1.31	0.42
++6.7	**455338**	5/5V6.7–SF	16.0	A1	1.19	0.25
7.1	**455339**	5/5V7.1–SF	19.0	A1	1.19	0.25
7.5	**455340**	5/5V7.5–SF	21.0	A1	1.19	0.25
8.0	**455341**	5/5V8.0–E	30.0	A1	1.38	0.18
8.5	**455342**	5/5V8.5–E	33.0	A1	1.38	0.18
9.0	**455343**	5/5V9.0–E	36.0	A1	1.38	0.18
9.25	**455344**	5/5V9.25–E	38.0	A1	1.38	0.18
9.75	**455345**	5/5V9.75–E	38.0	A1	1.38	0.18
10.3	**455346**	5/5V10.3–E	41.0	A1	1.38	0.18
10.9	**455347**	5/5V10.9–E	45.0	A1	1.38	0.18
11.3	**455348**	5/5V11.3–E	42.0	A1	1.38	0.18
11.8	**455349**	5/5V11.8–E	45.0	A2	1.38	0.18
12.5	**455350**	5/5V12.5–E	55.0	A2	1.38	0.18
13.2	**455351**	5/5V13.2–E	58.0	A2	1.38	0.18
14.0	**455352**	5/5V14.0–E	60.0	A2	1.38	0.18
15.0	**455353**	5/5V15.0–E	61.0	A3	1.31	0.11
16.0	**455354**	5/5V16.0–E	67.0	A3	1.25	0.05
18.7	**455355**	5/5V18.7–F	92.0	C3	1.31	0.11
21.2	**455356**	5/5V21.2–F	77.0	C3	1.31	0.11
23.6	**455357**	5/5V23.6–F	88.0	C3	1.31	0.11
28.0	**455358**	5/5V28.0–F	111.0	D3	1.08	0.34
31.5	**455359**	5/5V31.5–J	150.0	D3	1.00	0.60
37.5	**455360**	5/5V37.5–J	186.0	D3	0.81	0.79
50.0	**455361**	5/5V50.0–J	273.0	D3	1.00	0.60

Δ Pitch diameter = O.D. – .10" . . . >∞∞

‡ **Type 1 = Block Type, 2 = Web, 3 = Arm – See page PT7-2.**

++ 5VX Belts only on these sizes.

5V QD SHEAVES - Heavy Duty

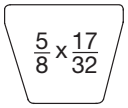

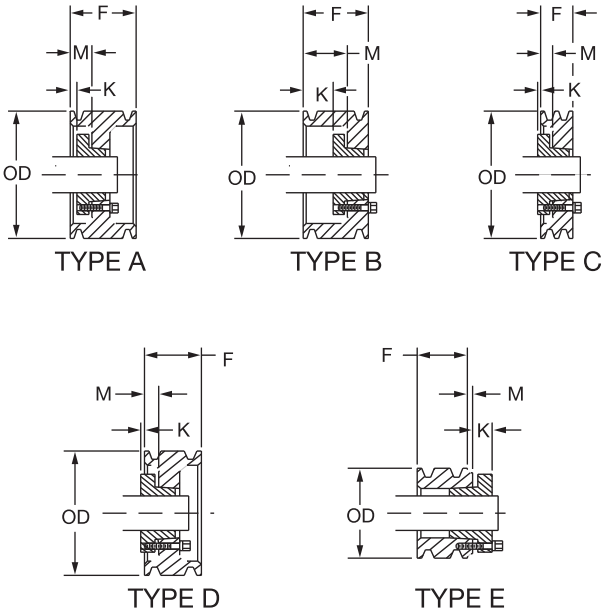

8-Groove						F = 5.81
O.D.Δ	Part No.	Description	Wt.	Type‡	M	K
7.1	**455393**	8/5V7.1–SF	24.0	A1	2.13	1.19
7.5	**455394**	8/5V7.5–SF	28.0	A1	2.13	1.19
8.0	**455395**	8/5V8.0–E	36.0	A1	2.50	1.30
8.5	**455396**	8/5V8.5–E	39.0	A1	2.50	1.30
9.0	**455397**	8/5V9.0–E	43.0	A1	2.50	1.30
9.25	**455398**	8/5V9.25–F	55.0	A1	2.31	0.89
9.75	**455399**	8/5V9.75–F	56.0	A1	2.31	0.89
10.3	**455400**	8/5V10.3–F	60.0	A1	2.31	0.89
10.9	**455401**	8/5V10.9–F	65.0	A1	2.31	0.89
11.3	**455402**	8/5V11.3–F	70.0	A1	2.31	0.89
11.8	**455403**	8/5V11.8–F	67.0	A1	2.31	0.89
12.5	**455404**	8/5V12.5–F	76.0	A1	2.56	1.14
13.2	**455405**	8/5V13.2–F	77.0	A1	2.56	1.14
14.0	**455406**	8/5V14.0–F	77.0	A1	2.44	1.02
15.0	**455407**	8/5V15.0–F	85.0	A2	2.44	1.02
16.0	**455408**	8/5V16.0–F	90.0	A3	2.38	0.96
18.7	**455409**	8/5V18.7–J	138.0	A3	2.91	1.31
21.2	**455410**	8/5V21.2–J	126.0	D3	1.56	0.04
23.6	**455411**	8/5V23.6–J	141.0	D3	1.56	0.04
28.0	**455412**	8/5V28.0–J	172.0	D3	1.56	0.04
31.5	**455413**	8/5V31.5–M	246.0	A3	1.94	0.20
37.5	**455414**	8/5V37.5–M	296.0	A3	1.94	0.20
50.0	**455415**	8/5V50.0–M	419.0	A3	1.94	0.20

Δ Pitch diameter = O.D. – .10"

‡ **Type 1 = Block Type, 2 = Web, 3 = Arm – See drawings page PT7-2.**

++ 5VX Belts only on these sizes.

6-Groove						F = 4.44
O.D.Δ	Part No.	Description	Wt.	Type‡	M	K
++4.4	**455362**	6/5V4.40–SD	9.0	E1	0.00	0.70
++4.65	**455363**	6/5V4.65–SD	10.0	E1	0.00	0.70
++4.90	**455364**	6/5V4.90–SD	11.0	E1	0.00	0.70
++5.20	**455365**	6/5V5.20–SD	12.0	A1	1.31	0.61
++5.50	**455366**	6/5V5.50–SD	13.0	A1	1.31	0.61
++5.90	**455367**	6/5V5.90–SK	14.0	A1	1.31	0.42
++6.30	**455368**	6/5V6.30–SK	16.0	A1	1.31	0.42
++6.70	**455369**	6/5V6.70–SF	19.0	A1	1.69	0.75
7.1	**455370**	6/5V7.1–SF	21.0	A1	1.63	0.68
7.5	**455371**	6/5V7.5–SF	24.0	A1	1.63	0.68
8.0	**455372**	6/5V8.0–E	32.0	A1	2.00	0.80
8.5	**455373**	6/5V8.5–E	34.0	A1	2.00	0.80
9.0	**455374**	6/5V9.0–E	38.0	A1	2.00	0.80
9.25	**455375**	6/5V9.25–E	40.0	A1	2.00	0.80
9.75	**455376**	6/5V9.75–E	41.0	A1	2.00	0.80
10.3	**455377**	6/5V10.3–E	44.0	A1	2.00	0.80
10.9	**455378**	6/5V10.9–E	49.0	A1	2.00	0.80
11.3	**455379**	6/5V11.3–E	47.0	A1	2.00	0.80
11.8	**455380**	6/5V11.8E	49.0	A2	2.00	0.80
12.5	**455381**	6/5V12.5–F	63.0	B2	2.06	0.64
13.2	**455382**	6/5V13.2–F	64.0	B2	2.06	0.64
14.0	**455383**	6/5V14.0–F	73.0	B2	2.06	0.64
15.0	**455384**	6/5V15.0–F	75.0	D2	1.31	0.11
16.0	**455385**	6/5V16.0–F	91.0	B3	1.88	0.46
18.7	**455386**	6/5V18.7–F	99.0	A3	1.44	0.02
21.2	**455387**	6/5V21.2–F	86.0	D3	1.31	0.11
23.6	**455388**	6/5V23.6–J	121.0	B3	1.31	0.11
28.0	**455389**	6/5V28.0–J	145.0	B3	1.31	0.11
31.5	**455390**	6/5V31.5–J	167.0	B3	1.31	0.11
37.5	**455391**	6/5V37.5–J	208.0	B3	1.31	0.11
50.0	**455392**	6/5V50.0–M	353.0	B3	0.00	1.74

10-Groove						F = 7.19
O.D.Δ	Part No.	Description	Wt.	Type‡	M	K
8.0	**456062**	10/5V8.0–E	42.0	A1	3.25	2.05
8.5	**456063**	10/5V8.5–E	44.0	A1	3.25	2.05
9.0	**456064**	10/5V9.0–F	57.0	A1	3.31	1.89
9.25	**456065**	10/5V9.25–F	60.0	A1	3.31	1.89
9.75	**456066**	10/5V9.75–F	61.0	A1	3.31	1.89
10.3	**456067**	10/5V10.3–F	66.0	A1	3.31	1.89
10.9	**456068**	10/5V10.9–F	72.0	A1	3.31	1.89
11.3	**456069**	10/5V11.3–F	78.0	A1	3.31	1.89
11.8	**456070**	10/5V11.8–F	80.0	A1	3.31	1.89
12.5	**456071**	10/5V12.5–J	111.0	A1	3.56	1.96
13.2	**456072**	10/5V13.2–J	115.0	A1	3.56	1.96
14.0	**456073**	10/5V14.0–J	118.0	A1	3.44	1.84
15.0	**456074**	10/5V15.0–J	120.0	A1	3.31	1.71
16.0	**456075**	10/5V16.0–J	160.0	A1	3.56	1.96
18.7	**456076**	10/5V18.7–J	151.0	D2	1.56	0.04
21.2	**456077**	10/5V21.2–J	143.0	D2	1.56	0.04
23.6	**456078**	10/5V23.6–M	209.0	B3	1.94	0.20
28.0	**456079**	10/5V28.0–M	245.0	B3	1.94	0.20
31.5	**456080**	10/5V31.5–M	277.0	B3	1.94	0.20
37.5	**456081**	10/5V37.5–M	337.0	B3	1.94	0.20
50.0	**456082**	10/5V50.0–M	484.0	B3	1.94	0.20

SELECTION/DIMENSIONS

8V QD SHEAVES - Heavy Duty

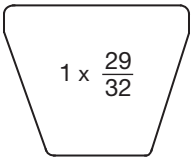

4-Groove — F = 4.88

O.D.Δ	Part No.	Description	Wt.	Type‡	M	K
12.5	**455416**	4/8V12.5–F	83.0	D1	1.19	0.23
13.2	**455417**	4/8V13.2–F	88.0	D2	1.19	0.23
14.0	**455418**	4/8V14.0–F	88.0	D2	1.19	0.23
15.0	**455419**	4/8V15.0–F	111.0	D2	1.19	0.23
16.0	**455420**	4/8V16.0–F	105.0	D2	1.19	0.23
17.0	**455521**	4/8V17.0–F	150.0	D3	1.19	0.23
18.0	**455422**	4/8V18.0–F	150.0	D3	1.19	0.23
19.0	**455423**	4/8V19.0–F	146.0	D3	1.19	0.23
20.0	**455424**	4/8V20.0–J	145.0	D3	1.44	0.16
21.2	**455425**	4/8V21.2–J	181.0	D3	1.44	0.16
22.4	**455426**	4/8V22.4–J	199.0	D3	1.44	0.16
24.8	**456654**	4/8V24.8–M	211.0	C3	1.44	0.93
30.0	**455427**	4/8V30.0–M	292.0	C3	0.81	0.93
35.5	**456655**	4/8V35.5–M	367.0	C3	0.81	0.93
40.0	**455428**	4/8V40.0–M	434.0	C3	0.81	0.93
44.5	**456656**	4/8V44.5–M	371.0	C3	0.81	0.93
53.0	**455429**	4/8V53.0–M	818.0	C3	0.81	0.93

5-Groove — F = 6.00

O.D.Δ	Part No.	Description	Wt.	Type‡	M	K
12.5	**455430**	5/8V12.5–F	69.0	A2	2.31	0.89
13.2	**455431**	5/8V13.2–F	75.0	A2	2.31	0.89
14.0	**455432**	5/8V14.0–F	83.0	A2	2.31	0.89
15.0	**455433**	5/8V15.0–F	94.0	A2	2.31	0.89
16.0	**455434**	5/8V16.0–F	106.0	A2	2.31	0.89
17.0	**455435**	5/8V17.0–J	133.0	A2	2.00	0.40
18.0	**455436**	5/8V18.0–J	147.0	A3	2.00	0.40
19.0	**455437**	5/8V19.0–J	161.0	A3	2.00	0.40
20.0	**455438**	5/8V20.0–J	141.0	A3	2.00	0.40
21.2	**455439**	5/8V21.2–J	151.0	A3	2.00	0.40
22.4	**456402**	5/8V22.4–M	208.0	D3	1.94	0.20
24.8	**456657**	5/8V24.8–M	229.0	D3	1.94	0.20
30.0	**455441**	5/8V30.0–M	276.0	D3	1.94	0.20
35.5	**456658**	5/8V35.5–M	334.0	D3	1.94	0.20
40.0	**455442**	5/8V40.0–M	385.0	D3	1.94	0.20
44.5	**456659**	5/8V44.5–N	459.0	C3	0.94	1.11
53.0	**455443**	5/8V53.0–N	574.0	C3	0.94	1.11

6-Groove — F = 7.13

O.D.Δ	Part No.	Description	Wt.	Type‡	M	K
12.5	**455444**	6/8V12.5–F	78.0	A1	2.31	0.89
13.2	**455445**	6/8V13.2–F	85.0	A2	2.31	0.89
14.0	**455446**	6/8V14.0–F	94.0	A2	2.31	0.89
15.0	**455447**	6/8V15.0–J	122.0	A2	2.56	0.96
16.0	**455448**	6/8V16.0–J	134.0	A2	2.56	0.96
17.0	**455449**	6/8V17.0–J	147.0	A2	2.56	0.96
18.0	**455450**	6/8V18.0–J	161.0	A2	2.56	0.96
19.0	**455451**	6/8V19.0–J	177.0	A3	2.56	0.96
20.0	**455452**	6/8V20.0–M	232.0	B3	2.94	1.20
21.2	**455453**	6/8V21.2–M	216.0	B3	2.94	1.20
22.4	**455454**	6/8V22.4–M	227.0	B3	2.94	1.20
24.8	**456660**	6/8V24.8–M	251.0	B3	1.94	0.20
30.0	**455455**	6/8V30.0–M	306.0	B3	2.06	0.32
35.5	**456661**	6/8V35.5–N	391.0	C3	1.13	0.92
40.0	**455456**	6/8V40.0–N	450.0	C3	1.13	0.92
44.5	**456662**	6/8V44.5–N	511.0	C3	1.13	0.92
53.0	**455457**	6/8V53.0–N	646.0	C3	1.13	0.92
63.0	**456663**	6/8V63.0–P	856.0	C3	2.00	0.30
71.0	**456690**	6/8V71.0–P	1016.0	C3	2.00	0.30

8-Groove — F = 9.38

O.D.Δ	Part No.	Description	Wt.	Type‡	M	K
12.5	**455458**	8/8V12.5–J	115.0	A1	3.56	1.96
13.2	**455459**	8/8V13.2–J	129.0	A2	3.56	1.96
14.0	**455460**	8/8V14.0–J	146.0	A2	3.56	1.96
15.0	**455461**	8/8V15.0–J	144.0	A2	3.56	1.96
16.0	**455462**	8/8V16.0–J	158.0	A2	3.56	1.96
17.0	**455463**	8/8V17.0–M	214.0	A1	3.94	2.20
18.0	**455464**	8/8V18.0–M	230.0	A2	4.19	2.45
19.0	**455465**	8/8V19.0–M	247.0	A2	3.94	2.20
20.0	**455466**	8/8V20.0–M	266.0	A2	3.94	2.20
21.2	**455467**	8/8V21.2–M	245.0	A3	3.94	2.20
22.4	**455468**	8/8V22.4–M	264.0	A3	2.25	0.51
24.8	**456664**	8/8V24.8–N	315.0	A3	2.25	0.20
30.0	**455469**	8/8V30.0–N	384.0	A3	2.25	0.20
35.5	**456665**	8/8V35.5–N	468.0	A3	2.25	0.20
40.0	**455470**	8/8V40.0–N	543.0	B3	2.63	0.58
44.5	**456666**	8/8V44.5–P	670.0	B3	2.63	0.33
53.0	**455471**	8/8V53.0–P	833.0	B3	2.63	0.33
63.0	**456667**	8/8V63.0–P	1049.0	B3	2.63	0.33
71.0	**456691**	8/8V71.0–W	1266.0	C3	0.19	2.37

Δ Pitch diameter = O.D. – .20”

‡ **Type 1 = Block Type, 2 = Web, 3 = Arm – See page PT7-2.**

8V QD SHEAVES - Heavy Duty

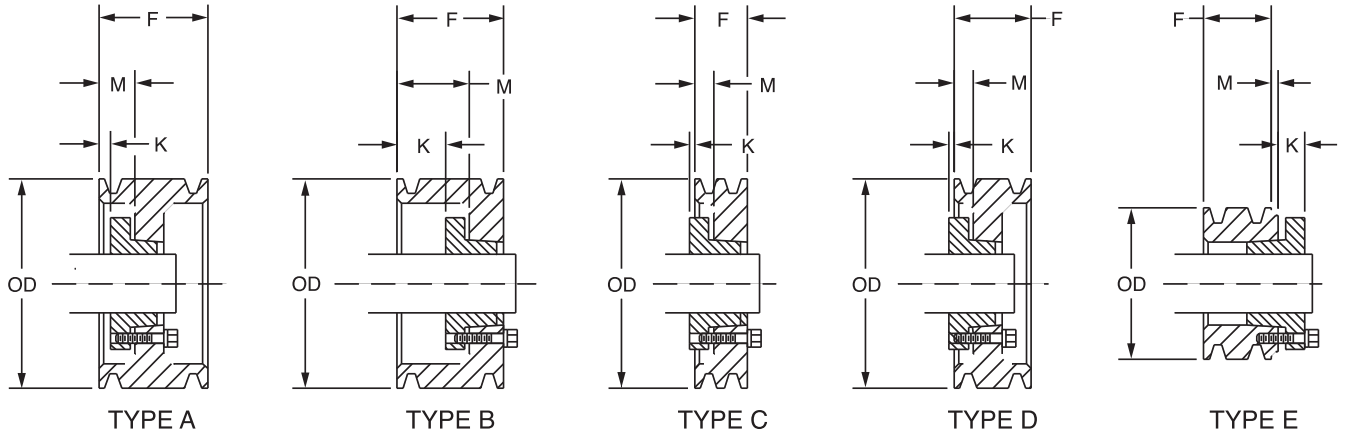

10-Groove						F = 11.63
O.D.Δ	Part No.	Description	Wt.	Type‡	M	K
12.5	**455472**	10/8V12.5–J	133	A1	3.56	1.96
13.2	**455473**	10/8V13.2–J	148	A1	3.56	1.96
14.0	**455474**	10/8V14.0–J	166	A2	3.56	1.96
15.0	**455475**	10/8V15.0–M	224	A2	3.94	2.20
16.0	**455476**	10/8V16.0–M	260	A2	3.94	2.20
17.0	**455477**	10/8V17.0–M	241	A1	3.94	2.20
18.0	**455478**	10/8V18.0–M	259	A2	3.94	2.20
19.0	**455479**	10/8V19.0–M	279	A2	3.94	2.20
20.0	**455480**	10/8V20.0–M	300	A2	3.94	2.20
21.2	**455481**	10/8V21.2–M	286	A3	3.94	2.20
22.4	**455482**	10/8V22.4–N	321	A3	2.25	0.20
24.8	**456668**	10/8V24.8–N	357	A3	2.25	0.20
30.0	**455483**	10/8V30.0–N	444	A3	2.25	0.20
35.5	**456669**	10/8V35.5–P	591	A3	2.63	0.33
40.0	**455484**	10/8V40.0–P	680	A3	2.63	0.33
44.5	**456670**	10/8V44.5–P	775	A3	2.63	0.33
53.0	**455485**	10/8V53.0–P	971	A3	2.63	0.33
63.0	**456671**	10/8V63.0–W	1256	D3	1.31	1.25
71.0	**456692**	10/8V71.0–W	1482	D3	1.31	1.25

12-Groove						F = 13.88
O.D.Δ	Part No.	Description	Wt.	Type‡	M	K
12.5	**456672**	12/8V12.5–M	164	A1	3.94	2.20
13.2	**456673**	12/8V13.2–M	186	A1	3.94	2.20
14.0	**456674**	12/8V14.0–M	213	A1	3.94	2.20
15.0	**456675**	12/8V15.0–M	248	A2	3.94	2.20
16.0	**456676**	12/8V16.0–M	285	A1	3.94	2.20
17.0	**456677**	12/8V17.0–M	270	A1	3.94	2.20
18.0	**456678**	12/8V18.0–M	292	A2	3.94	2.20
19.0	**456679**	12/8V19.0–N	330	A2	2.25	0.20
20.0	**456680**	12/8V20.0–N	354	A2	2.25	0.20
21.2	**456681**	12/8V21.2–N	365	A3	2.25	0.20
22.4	**456682**	12/8V22.4–N	367	A3	2.25	0.20
24.8	**456683**	12/8V24.8–N	408	A3	2.25	0.20
30.0	**456684**	12/8V30.0–P	557	A3	2.63	0.32
35.5	**456685**	12/8V35.5–P	671	A3	2.63	0.32
40.0	**456686**	12/8V40.0–P	776	A3	2.63	0.32
44.5	**456687**	12/8V44.5–P	887	A3	2.63	0.32
53.0	**456688**	12/8V53.0–W	1150	A3	2.88	0.32
63.0	**456689**	12/8V63.0–W	1445	D3	2.44	0.12
71.0	**456693**	12/8V71.0–W	1706	D3	2.44	0.12

Δ Pitch diameter = O.D. – .20”

‡ **Type 1 = Block Type, 2 = Web, 3 = Arm – See page PT7-2.**

SELECTION/DIMENSIONS

A/B QD SHEAVES - Heavy Duty

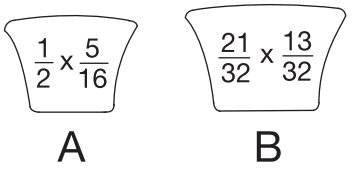

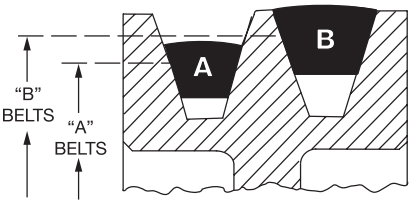

Drawing illustrates how either A or B belts may be used with combination groove sheaves.

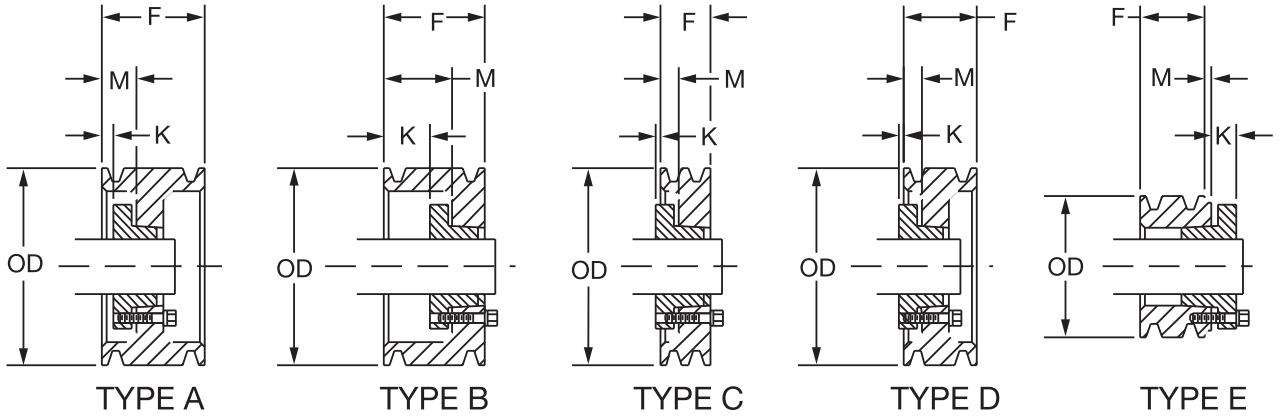

1-Groove — **F = .84 A3.2 thru A4.0 B4.4**, **Balance F = 1**

O.D.Δ	Part No.	Description	Wt.	Type‡	M	K
3.75	**118283**	1A3.0B3.4–SH	2.0	E1	0.44	0.68
3.95	**118284**	1A3.2B3.6–SH	2.2	D1	0.05	0.63
4.15	**118285**	1A3.4B3.8–SH	2.4	D1	0.05	0.63
4.35	**118286**	1A3.6B4.0–SH	2.7	D1	0.05	0.63
4.55	**455550**	1A3.8B4.2–SH	2.9	D1	0.05	0.63
4.75	**455551**	1A4.0B4.4–SH	3.4	D1	0.05	0.63
4.95	**455552**	1A4.2B4.6–SDS	4.0	D1	0.14	0.55
5.15	**455553**	1A4.4B4.8–SDS	4.0	D1	0.14	0.55
5.35	**455554**	1A4.6B5.0–SDS	4.0	D1	0.14	0.55
5.55	**455555**	1A4.8B5.2–SDS	5.0	D1	0.14	0.55
5.75	**455556**	1A5.0B5.4–SDS	5.0	D1	0.14	0.55
5.95	**455557**	1A5.2B5.6–SDS	6.0	C1	0.25	0.45
6.15	**455558**	1A5.4B5.8–SDS	6.0	C1	0.25	0.45
6.35	**455559**	1A5.6B6.0–SDS	6.0	C1	0.25	0.45
6.55	**455560**	1A5.8B6.2–SDS	6.0	C1	0.25	0.45
6.75	**455561**	1A6.0B6.4–SDS	6.0	C1	0.25	0.45
6.95	**455562**	1A6.2B6.6–SDS	7.0	C1	0.25	0.45
7.15	**455563**	1A6.4B6.8–SDS	7.0	C1	0.25	0.45
7.35	**455564**	1A6.6B7.0–SDS	7.5	D1	0.13	0.57
7.75	**455565**	1A7.0B7.4–SDS	8.0	C1	0.25	0.45
8.35	**455566**	1A7.6B8.0–SDS	8.0	D1	0.13	0.57
8.95	**455567**	1A8.2B8.6–SDS	8.0	D2	0.13	0.57
9.75	**455568**	1A9.0B9.4–SDS	8.0	D2	0.13	0.57
11.35	**455569**	1A10.6B11.0–SDS	10.0	D2	0.13	0.57
12.75	**455570**	1A12.0B12.4–SDS	11.0	D3	0.13	0.57
13.95	**455571**	1A13.2B13.6–SDS	13.0	D3	0.06	0.63
15.75	**455572**	1A15.0B15.4–SK	16.0	C3	0.06	0.83
16.35	**455573**	1A15.6B16.0–SK	17.0	C3	0.00	0.89
18.75	**455574**	1A18.0B18.4–SK	18.0	C3	0.00	0.89
20.35	**455575**	1B20.0–SK	18.0	C3	0.00	0.89

Δ P.D. for "A" Belts = O.D. – .37"
P.D. for "B" Belts = O.D. + .01"

‡ **Type 1 = Block Type, 2 = Web, 3 = Arm – See page PT7-2.**

2-Groove — **F = 1.75**

O.D.Δ	Part No.	Description	Wt.	Type‡	M	K
3.75	**455576**	2A3.0B3.4–SH	3.2	E1	0.38	0.68
3.95	**455577**	2A3.2B3.6–SH	3.4	E1	0.00	0.68
4.15	**455578**	2A3.4B3.8–SH	3.9	E1	0.00	0.68
4.35	**455579**	2A3.6B4.0–SH	3.8	A1	0.94	0.26
4.55	**455580**	2A3.8B4.2–SH	4.4	A1	0.94	0.26
4.75	**455581**	2A4.0B4.4–SH	4.6	A1	0.94	0.26
4.95	**455582**	2A4.2B4.6–SDS	5.0	A1	1.00	0.30
5.15	**455583**	2A4.4B4.8–SDS	4.1	A1	1.00	0.30
5.35	**455584**	2A4.6B5.0–SDS	6.0	A1	1.00	0.30
5.55	**455585**	2A4.8B5.2–SDS	7.0	A1	1.00	0.30
5.75	**455586**	2A5.0B5.4–SDS	7.0	A1	1.00	0.30
5.95	**455587**	2A5.2B5.6–SDS	7.0	A1	0.81	0.12
6.15	**455588**	2A5.4B5.8–SDS	7.0	D1	0.69	0.01
6.35	**455589**	2A5.6B6.0–SDS	7.0	D1	0.69	0.01
6.55	**455590**	2A5.8B6.2–SDS	6.3	D1	0.69	0.01
6.75	**455591**	2A6.0B6.4–SDS	8.0	D1	0.69	0.01
6.95	**455592**	2A6.2B6.6–SDS	8.2	D1	0.69	0.01
7.15	**455593**	2A6.4B6.8–SDS	9.0	D1	0.69	0.01
7.35	**455594**	2A6.6B7.0–SK	10.0	C1	0.50	0.39
7.75	**455595**	2A7.0B7.4–SK	11.0	C1	0.50	0.39
8.35	**455596**	2A7.6B8.0–SK	11.0	D2	0.44	0.46
8.95	**455597**	2A8.2B8.6–SK	12.0	D2	0.44	0.46
9.75	**455598**	2A9.0B9.4–SK	12.0	D2	0.44	0.46
11.35	**455599**	2A10.6B11.0–SK	14.0	D2	0.44	0.46
12.75	**455600**	2A12.0B12.4–SK	18.0	D3	0.44	0.46
13.95	**455601**	2A13.2B13.6–SK	19.0	D3	0.38	0.52
15.75	**455602**	2A15.0B15.4–SK	24.0	D3	0.44	0.46
16.35	**455603**	2A15.6B16.0–SK	22.0	D3	0.44	0.46
18.75	**455604**	2A18.0B18.4–SK	29.0	D3	0.31	0.58
20.35	**455605**	2B20.0–SF	30.0	D3	0.38	0.57
25.35	**455606**	2B25.0–SF	40.0	D3	0.38	0.57
30.35	**455607**	2B30.0–SF	50.0	D3	0.38	0.57
38.35	**455608**	2B38.0–SF	70.0	D3	0.34	0.60

A/B QD SHEAVES - Heavy Duty

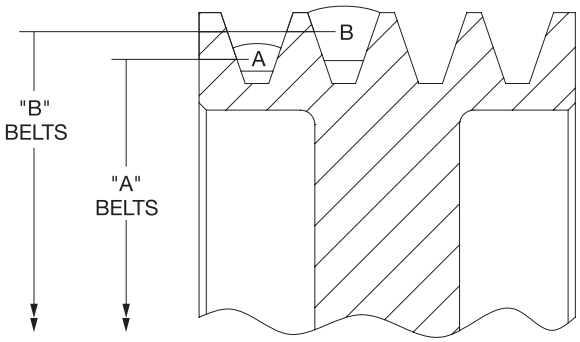

Drawing illustrates how either A or B belts may be used with combination groove sheaves.

3-Groove						F = 2.50
O.D.Δ	Part No.	Description	Wt.	Type‡	M	K
3.75	**455609**	3A3.0B3.4–SH	4.2	E1	0.38	0.68
3.95	**455610**	3A3.2B3.6–SH	4.7	E1	0.00	0.68
4.15	**455611**	3A3.4B3.8–SH	5.4	E1	0.00	0.68
4.35	**455612**	3A3.6B4.0–SH	4.8	E1	0.00	0.68
4.55	**455613**	3A3.8B4.2–SH	5.4	E1	0.00	0.68
4.75	**455614**	3A4.0B4.4–SH	5.6	E1	0.00	0.68
4.95	**455615**	3A4.2B4.6–SD	8.0	A1	1.06	0.37
5.15	**455616**	3A4.4B4.8–SD	8.5	A1	1.06	0.67
5.35	**455617**	3A4.6B5.0–SD	9.0	A1	1.06	0.67
5.55	**455618**	3A4.8B5.2–SD	9.0	A1	1.06	0.37
5.75	**455619**	3A5.0B5.4–SD	10.0	A1	1.06	0.37
5.95	**455620**	3A5.2B5.6–SD	11.0	A1	1.06	0.37
6.15	**455621**	3A5.4B5.8–SD	9.1	A1	1.06	0.37
6.35	**455622**	3A5.6B6.0–SD	10.0	A1	1.06	0.37
6.55	**455623**	3A5.8B6.2–SD	11.0	A1	1.06	0.37
6.75	**455624**	3A6.0B6.4–SD	11.0	A1	1.06	0.37
6.95	**455625**	3A6.2B6.6–SD	12.0	A1	1.06	0.37
7.15	**455626**	3A6.4B6.8–SD	13.0	A1	1.06	0.37
7.35	**455627**	3A6.6B7.0–SK	13.0	D1	0.75	0.14
7.75	**455628**	3A7.0B7.4–SK	13.0	D1	0.75	0.14
8.35	**455629**	3A7.6B8.0–SK	14.0	D1	0.88	0.02
8.95	**455630**	3A8.2B8.6–SK	13.0	D1	0.88	0.02
9.75	**455631**	3A9.0B9.4–SK	16.0	D2	0.75	0.14
11.35	**455632**	3A10.6B11.0–SK	19.0	D2	0.75	0.14
12.75	**455633**	3A12.0B12.4–SK	24.0	D3	0.75	0.14
13.95	**455634**	3A13.2B13.6–SK	24.0	D3	0.69	0.21
15.75	**455635**	3A15.0B15.4–SK	30.0	D3	0.75	0.14
16.35	**455636**	3A15.6B16.0–SK	27.0	D3	0.75	0.14
18.75	**455637**	3A18.0B18.4–SK	38.0	D3	0.75	0.14
20.35	**455638**	3B20.0–SF	38.0	D3	0.63	0.32
25.35	**455639**	3B25.0–SF	51.0	D3	0.63	0.32
30.35	**455640**	3B30.0–SF	65.0	D3	0.63	0.32
38.35	**455641**	3B38.0–E	95.0	D3	0.63	0.57

4-Groove						F = 3.25
O.D.Δ	Part No.	Description	Wt.	Type‡	M	K
3.75	**455642**	4A3.0B3.4–SD	5.5	E1	0.47	0.70
3.95	**455643**	4A3.2B3.6–SD	5.8	E1	0.47	0.70
4.15	**455644**	4A3.4B3.8–SD	6.2	E1	0.47	0.70
4.35	**455645**	4A3.6B4.0–SD	6.6	E1	0.00	0.70
4.55	**455646**	4A3.8B4.2–SD	6.9	E1	0.00	0.70
4.75	**455647**	4A4.0B4.4–SD	7.5	E1	0.00	0.70
4.95	**455648**	4A4.2B4.6–SD	7.5	A1	1.50	0.80
5.15	**455649**	4A4.4B4.8–SD	7.3	A1	1.50	0.80
5.35	**455650**	4A4.6B5.0–SD	10.0	A1	1.50	0.80
5.55	**455651**	4A4.8B5.2–SD	11.0	A1	1.50	0.80
5.75	**455652**	4A5.0B5.4–SD	11.0	A1	1.50	0.80
5.95	**455653**	4A5.2B5.6–SD	12.0	A1	1.50	0.80
6.15	**455654**	4A5.4B5.8–SD	11.0	A1	1.50	0.80
6.35	**455655**	4A5.6B6.0–SD	11.0	A1	1.50	0.80
6.55	**455656**	4A5.8B6.2–SD	14.0	A1	1.50	0.80
6.75	**455657**	4A6.0B6.4–SD	14.0	A1	1.50	0.80
6.95	**455658**	4A6.2B6.6–SD	14.0	A1	1.50	0.80
7.15	**455659**	4A6.4B6.8–SD	14.0	A1	1.50	0.80
7.35	**455660**	4A6.6B7.0–SK	14.0	A1	1.00	0.11
7.75	**455661**	4A7.0B7.4–SK	15.0	A1	1.25	0.36
8.35	**455662**	4A7.6B8.0–SK	15.0	A1	1.38	0.48
8.95	**455663**	4A8.2B8.6–SK	17.0	A1	1.50	0.61
9.75	**455664**	4A9.0B9.4–SK	19.0	A2	1.13	0.23
11.35	**455665**	4A10.6B11.0–SK	22.0	A2	1.00	0.11
12.75	**455666**	4A12.0B12.4–SK	29.0	A3	1.00	0.11
13.95	**455667**	4A13.2B13.6–SK	29.0	A3	1.00	0.11
15.75	**455668**	4A15.0B15.4–SF	39.0	A3	1.13	0.18
16.35	**455669**	4A15.6B16.0–SF	34.0	A3	1.00	0.06
18.75	**455670**	4A18.0B18.4–SF	47.0	A3	1.00	0.06
20.35	**455671**	4B20.0–SF	46.0	A3	1.00	0.06
25.35	**455672**	4B25.0–E	66.0	D3	1.00	0.20
30.35	**455673**	4B30.0–E	83.0	D3	0.63	0.57
38.35	**455674**	4B38.0–E	115.0	D3	1.00	0.20

Δ P.D. for "A" Belts = O.D. – .37"
P.D. for "B" Belts = O.D. + .01"

‡ **Type 1 = Block Type, 2 = Web, 3 = Arm – See page PT7-2.**

SELECTION/DIMENSIONS

A/B QD SHEAVES - Heavy Duty

5-Groove — F = 4.00

O.D.Δ	Part No.	Description	Wt.	Type‡	M	K
3.75	**455675**	5A3.0B3.4–SD	5.9	E1	0.47	0.70
3.95	**455676**	5A3.2B3.6–SD	6.5	E1	0.47	0.70
4.15	**455677**	5A3.4B3.8–SD	7.2	E1	0.47	0.70
4.35	**455678**	5A3.6B4.0–SD	7.3	E1	0.00	0.70
4.55	**455679**	5A3.8B4.2–SD	8.0	E1	0.00	0.70
4.75	**455680**	5A4.0B4.4–SD	8.8	E1	0.00	0.70
4.95	**455681**	5A4.2B4.6–SD	9.0	A1	1.31	0.62
5.15	**455682**	5A4.4B4.8–SD	8.5	A1	1.31	0.62
5.35	**455683**	5A4.6B5.0–SD	11.0	A1	1.31	0.62
5.55	**455684**	5A4.8B5.2–SD	12.0	A1	1.31	0.62
5.75	**455685**	5A5.0B5.4–SK	12.0	A1	1.31	0.42
5.95	**455686**	5A5.2B5.6–SK	12.0	A1	1.31	0.42
6.15	**455687**	5A5.4B5.8–SK	13.0	A1	1.31	0.42
6.35	**455688**	5A5.6B6.0–SK	14.0	A1	1.31	0.42
6.55	**455689**	5A5.8B6.2–SK	13.0	A1	1.31	0.42
6.75	**455690**	5A6.0B6.4–SK	16.0	A1	1.31	0.42
6.95	**455691**	5A6.2B6.6–SK	15.0	A1	1.31	0.42
7.15	**455692**	5A6.4B6.8–SK	17.0	A1	1.31	0.42
7.35	**455693**	5A6.6B7.0–SF	16.0	A1	1.31	0.37
7.75	**455694**	5A7.0B7.4–SF	20.0	A1	1.31	0.37
8.35	**455695**	5A7.6B8.0–SF	17.0	A1	1.31	0.37
8.95	**455696**	5A8.2B8.6–SF	24.0	A1	1.31	0.37
9.75	**455697**	5A9.0B9.4–SF	24.0	A1	1.31	0.37
11.35	**455698**	5A10.6B11.0–SF	29.0	A2	1.31	0.37
12.75	**455699**	5A12.0B12.4–SF	34.0	A3	1.06	0.12
13.95	**455700**	5A13.2B13.6–SF	33.0	A3	1.31	0.37
15.75	**455701**	5A15.0B15.4–SF	46.0	A3	1.31	0.37
16.35	**455702**	5A15.6B16.0–SF	38.0	A2	1.25	0.31
18.75	**455703**	5A18.0B18.4–SF	55.0	A3	1.31	0.37
20.35	**455704**	5B20.0–E	58.0	A3	1.25	0.05
25.35	**455705**	5B25.0–E	76.0	A3	1.25	0.05
30.35	**455706**	5B30.0–E	97.0	A3	1.25	0.05
38.35	**455707**	5B38.0–E	135.0	A3	1.25	0.05

6-Groove — F = 4.75

O.D.Δ	Part No.	Description	Wt.	Type‡	M	K
3.75	**455708**	6A3.0B3.4–SD	6.7	E1	0.38	0.70
3.95	**455709**	6A3.2B3.6–SD	7.4	E1	0.38	0.70
4.15	**455710**	6A3.4B3.8–SD	8.0	E1	0.38	0.70
4.35	**455711**	6A3.6B4.0–SD	8.4	E1	0.00	0.70
4.55	**455712**	6A3.8B4.2–SD	9.0	E1	0.00	0.70
4.75	**455713**	6A4.0B4.4–SD	10.0	E1	0.00	0.70
4.95	**455714**	6A4.2B4.6–SD	10.0	A1	1.31	0.62
5.15	**455715**	6A4.4B4.8–SD	10.0	A1	1.31	0.62
5.35	**455716**	6A4.6B5.0–SD	12.0	A1	1.31	0.62
5.55	**455717**	6A4.8B5.2–SD	13.0	A1	1.31	0.62
5.75	**455718**	6A5.0B5.4–SK	13.0	A1	1.31	0.42
5.95	**455719**	6A5.2B5.6–SK	14.0	A1	1.31	0.42
6.15	**455720**	6A5.4B5.8–SK	12.0	A1	1.31	0.42
6.35	**455721**	6A5.6B6.0–SK	15.0	A1	1.31	0.42
6.55	**455722**	6A5.8B6.2–SK	15.0	A1	1.31	0.42
6.75	**455723**	6A6.0B6.4–SK	17.0	A1	1.31	0.42
6.95	**455724**	6A6.2B6.6–SK	17.0	A1	1.31	0.42
7.15	**455725**	6A6.4B6.8–SK	19.0	A1	1.31	0.42
7.35	**455726**	6A6.6B7.0–SF	18.0	A1	1.69	0.75
7.75	**455727**	6A7.0B7.4–SF	22.0	A1	1.69	0.75
8.35	**455728**	6A7.6B8.0–SF	23.0	A1	1.69	0.75
8.95	**455729**	6A8.2B8.6–SF	26.0	A1	1.69	0.75
9.75	**455730**	6A9.0B9.4–SF	27.0	A1	1.69	0.75
11.35	**455731**	6A10.6B11.0–SF	32.0	A2	1.69	0.75
12.75	**455732**	6A12.0B12.4–SF	39.0	A3	1.50	0.56
13.95	**455733**	6A13.2B13.6–SF	38.0	A3	1.69	0.75
15.75	**455734**	6A15.0B15.4–SF	50.0	A2	1.81	0.87
16.35	**455735**	6A15.6B16.0–SF	44.0	A2	1.81	0.87
18.75	**455736**	6A18.0B18.4–SF	62.0	A3	1.75	0.81
20.35	**455737**	6B20.0–E	65.0	A3	1.38	0.18
25.35	**455738**	6B25.0–E	87.0	A3	1.38	0.18
30.35	**455739**	6B30.0–E	111.0	A3	1.38	0.18
38.35	**455740**	6B38.0–E	155.0	A3	1.38	0.18

8-Groove — F = 6.25

O.D.Δ	Part No.	Description	Wt.	Type‡	M	K
5.8	**455741**	8B5.4–SK	15.0	A1	1.88	0.98
6.0	**455742**	8B5.6–SK	16.0	A1	1.88	0.98
6.4	**455743**	8B6.0–SF	21.0	A1	1.81	0.87
6.8	**455744**	8B6.4–SF	23.0	A1	1.81	0.87
7.2	**455745**	8B6.8–SF	25.0	A1	1.25	0.31
7.8	**455746**	8B7.4–SF	28.0	A1	1.25	1.18
9.0	**455747**	8B8.6–E	40.0	A1	2.38	1.18
9.8	**455748**	8B9.4–E	43.0	A1	2.38	1.18
11.4	**455749**	8B11.0–E	49.0	A1	2.38	1.18
12.8	**455750**	8B12.4–E	56.0	A2	2.38	1.18
15.8	**455751**	8B15.4–E	69.0	A2	2.38	1.18
18.8	**455752**	8B18.4–F	91.0	D3	1.31	0.11
20.4	**455753**	8B20.0–F	84.0	D3	1.31	0.11
25.4	**455754**	8B25.0–F	111.0	D3	1.31	0.11
30.4	**455755**	8B30.0–F	142.0	D3	1.31	0.11
38.4	**455756**	8B38.0–F	200.0	D3	1.31	0.11

10-Groove — F = 7.75

O.D.Δ	Part No.	Description	Wt.	Type‡	M	K
5.8	**455757**	10B5.4–SK	18.0	A1	3.25	2.36
6.0	**455758**	10B5.6–SK	19.0	A1	3.50	2.61
6.4	**455759**	10B6.0–SF	24.0	A1	3.25	2.31
6.8	**455760**	10B6.4–SF	26.0	A1	3.50	2.56
7.2	**455761**	10B6.8 SF	28.0	A1	3.00	2.06
7.8	**455762**	10B7.4–SF	32.0	A1	2.56	1.62
9.0	**455763**	10B8.6–E	47.0	A1	3.13	1.93
9.8	**455764**	10B9.4–E	48.0	A1	3.13	1.93
11.4	**455765**	10B11.0–E	56.0	A1	3.13	1.93
12.8	**455766**	10B12.4–F	64.0	A1	3.13	1.70
15.8	**455767**	10B15.4 F	88.0	A2	2.06	0.64
18.8	**455768**	10B18.4–F	103.0	A3	2.06	0.64
20.4	**455769**	10B20.0–F	99.0	A3	2.06	0.64
25.4	**455770**	10B25.0–F	132.0	A3	2.06	0.64
30.4	**455771**	10B30.0–F	169.0	A3	2.06	0.64
38.4	**455772**	10B38.0–J	257.0	D3	1.44	0.16

Δ P.D. for "A" Belts = O.D. – .37"
P.D. for "B" Belts = O.D. + .01"

‡ **Type 1 = Block Type, 2 = Web, 3 = Arm – See page PT7-2.**

C QD SHEAVES - Heavy Duty

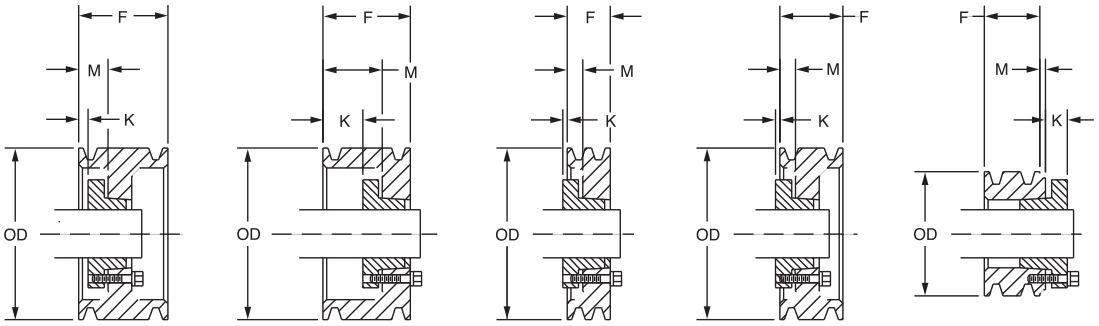

TYPE A TYPE B TYPE C TYPE D TYPE E

1-Groove — **F = 1.38**

O.D.Δ	Part No.	Description	Wt.	Type‡	M	K
7.4	**455773**	1C7.0–SF	9.0	C1	0.13	0.82
7.9	**455774**	1C7.5–SF	11.0	C1	0.13	0.82
8.4	**455775**	1C8.0–SF	11.0	C1	0.13	0.82
8.9	**455776**	1C8.5–SF	12.0	C1	0.13	0.82
9.4	**455777**	1C9.0–SF	12.0	C1	0.13	0.82
9.9	**455778**	1C9.5–SF	13.0	C1	0.13	0.82
10.4	**455779**	1C10.0–SF	14.0	C2	0.13	0.82
10.9	**455780**	1C10.5–SF	14.0	C2	0.13	0.82
11.4	**455781**	1C11.0–SF	16.0	C2	0.13	0.82
12.4	**455782**	1C12.0–SF	17.0	C2	0.13	0.82
13.4	**455783**	1C13.0–SF	19.0	C3	0.13	0.82
14.4	**455784**	1C14.0–SF	21.0	C3	0.13	0.82
16.4	**455785**	1C16.0–SF	24.0	C3	0.13	0.82
18.4	**455786**	1C18.0–SF	27.0	C3	0.13	0.82
20.4	**455787**	1C20.0–SF	31.0	C3	0.13	0.82
24.4	**455788**	1C24.0–SF	38.0	C3	0.13	0.82

2-Groove — **F = 2.37**

O.D.Δ	Part No.	Description	Wt.	Type‡	M	K
7.4	**455789**	2C7.0–SF	18.0	D1	0.81	0.13
7.9	**455790**	2C7.5–SF	20.0	D1	0.81	0.13
8.4	**455791**	2C8.0–SF	19.0	D1	0.81	0.13
8.9	**455792**	2C8.5–SF	20.0	D1	0.81	0.13
9.4	**455793**	2G9.0–SF	21.0	D1	0.81	0.13
9.9	**455794**	2C9.5–SF	22.0	D1	0.81	0.13
10.4	**455795**	2C10.0–SF	23.0	D2	0.81	0.13
10.9	**455796**	2C10.5–SF	23.0	D2	0.81	0.13
11.4	**455797**	2C11.0–SF	25.0	D2	0.81	0.13
12.4	**455798**	2C12.0–SF	27.0	D2	0.56	0.38
13.4	**455799**	2C13.0–SF	29.0	D3	0.56	0.68
14.4	**455800**	2C14.0–SF	34.0	D3	0.56	0.38
16.4	**455801**	2C16.0–SF	39.0	D3	0.63	0.32
18.4	**455802**	2C18.0–SF	39.0	D2	0.63	0.32
20.4	**455803**	2C20.0–SF	43.0	D3	0.56	0.38
24.4	**455804**	2C24.0–SF	55.0	D3	0.56	0.38
27.4	**456012**	2C27.0–F	72.0	C3	0.56	0.86
30.4	**456805**	2C30.0–F	82.0	C3	0.56	0.86

3-Groove — **F = 3.38**

O.D.Δ	Part No.	Description	Wt.	Type‡	M	K
5.4	**455806**	+3C5.0–SD	9.0	A1	1.31	0.62
5.9	**455807**	+3C5.5–SD	10.0	A1	1.31	0.62
6.4	**455808**	+3C6.0–SF	10.0	A1	1.31	0.37
7.4	**455809**	3C7.0–SF	20.0	A1	1.13	0.18
7.9	**455810**	3C7.5–SF	23.0	A1	1.31	0.37
8.4	**455811**	3C8.0–E	33.0	B1	1.75	0.55
8.9	**455812**	3C8.5–E	35.0	B1	1.75	0.55
9.4	**455813**	3C9.0–E	36.0	B1	1.75	0.55
9.9	**455814**	3C9.5–E	37.0	B1	1.75	0.55
10.4	**455815**	3C10.0–E	39.0	B1	1.75	0.55
10.9	**455816**	3C10.5–E	39.0	B1	1.75	0.55
11.4	**455817**	3C11.0–E	40.0	B1	1.75	0.55
12.4	**455818**	3C12.0–E	43.0	B2	1.75	0.55
13.4	**455819**	3C13.0–E	45.0	B3	1.75	0.55
14.4	**455820**	3C14.0–E	51.0	B3	1.75	0.55
16.4	**455821**	3C16.0–E	59.0	A3	1.31	0.12
18.4	**455822**	3C18.0–E	55.0	D3	0.81	0.38
20.4	**455823**	3C20.0–E	60.0	D3	1.00	0.20
24.4	**455824**	3C24.0–E	75.0	D3	1.00	0.20
27.4	**456013**	3C27.0–F	91.0	D3	0.81	0.61
30.4	**455825**	3C30.0–F	104.0	D3	0.81	0.61
36.4	**455826**	3C36.0–F	133.0	D3	0.81	0.61
44.4	**455827**	3C44.0–F	176.0	D3	0.81	0.61
50.4	**455828**	3C50.0–F	211.0	D3	0.81	0.61

4-Groove — **F = 4.37**

O.D.Δ	Part No.	Description	Wt.	Type‡	M	K
5.4	**455829**	+4C5.0–SD	11.0	A1	1.56	0.87
5.9	**455830**	+4C5.5–SD	12.0	A1	1.56	0.87
6.4	**455831**	+4C6.0–SF	11.0	A1	1.56	0.62
7.4	**455832**	4C7.0–SF	23.0	A1	1.56	0.62
7.9	**455833**	4C7.5–SF	25.0	A1	1.50	0.56
8.4	**455834**	4C8.0–E	36.0	A1	2.00	0.80
8.9	**455835**	4C8.5–E	39.0	A1	2.00	0.80
9.4	**455836**	4C9.0–E	39.0	A1	2.13	0.93
9.9	**455837**	4C9.5–E	41.0	A1	2.00	0.80
10.4	**455838**	4C10.0–E	43.0	A1	2.13	0.93
10.9	**455839**	4C10.5–E	44.0	A1	2.13	0.93
11.4	**455840**	4C11.0–E	46.0	A1	2.13	0.93
12.4	**455841**	4C12.0–E	50.0	A2	2.13	0.93
13.4	**455842**	4C13.0–E	53.0	A3	2.00	0.80
14.4	**455843**	4C14.0–E	59.0	A2	1.81	0.62
16.4	**455844**	4C16.0–E	69.0	A3	1.94	0.74
18.4	**455845**	4C18.0–E	66.0	A3	1.88	0.68
20.4	**455846**	4C20.0–E	72.0	A3	1.50	0.30
24.4	**455847**	4C24.0–F	95.0	D3	1.31	0.11
27.4	**456014**	4C27.0–F	110.0	D3	1.31	0.11
30.4	**455848**	4C30.0–F	126.0	D3	1.31	0.11
36.4	**455849**	4C36.0–F	162.0	D3	1.31	0.11
44.4	**455850**	4C44.0–F	236.0	D3	1.19	0.41
50.4	**455851**	4C50.0–J	279.0	D3	1.56	0.04

Δ Pitch Diameter = O.D.

‡ Type 1 = Block Type, 2 = Web, 3 = Arm – See page PT7-2.

+ Recommended CX Belt only

SELECTION/DIMENSIONS

C QD SHEAVES - Heavy Duty

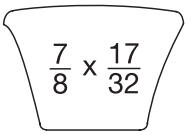

5-Groove — F = 5.37

O.D.Δ	Part No.	Description	Wt.	Type‡	M	K
6.4	**455852**	+5C6.0–SF	13.0	A1	1.94	1.00
7.4	**455853**	5C7.0–SF	26.0	A1	1.25	0.31
7.9	**455854**	5C7.5–SF	28.0	A1	1.88	0.93
8.4	**455855**	5C8.0–E	39.0	A1	1.50	0.30
8.9	**455856**	5C8.5–E	42.0	A1	1.63	0.43
9.4	**455857**	5C9.0–E	43.0	A1	1.63	0.43
9.9	**455858**	5C9.5–E	45.0	A1	1.50	0.30
10.4	**455859**	5C10.0–E	48.0	A1	1.50	0.30
10.9	**455860**	5C10.5–E	50.0	A1	1.50	0.30
11.4	**455861**	5C11.0–E	52.0	A1	2.25	1.05
12.4	**455862**	5C12.0–E	57.0	A1	2.22	1.02
13.4	**455863**	5C13.0–E	61.0	A2	2.00	0.80
14.4	**455864**	5C14.0–E	69.0	A2	2.00	0.80
16.4	**455865**	5C16.0–E	79.0	A3	2.00	0.80
18.4	**455866**	5C18.0–E	74.0	A3	2.38	1.18
20.4	**455867**	5C20.0–F	88.0	D3	1.31	0.11
24.4	**455868**	5C24.0–F	110.0	D3	1.31	0.11
27.4	**456083**	5C27.0–F	128.0	D3	1.31	0.11
30.4	**455869**	5C30.0–F	148.0	D3	1.31	0.11
36.4	**455870**	5C36.0–J	212.0	D3	1.31	0.29
44.4	**455871**	5C44.0–J	274.0	D3	1.31	0.29
50.0	**455872**	5C50.0–J	325.0	D3	1.56	0.04

8-Groove — F = 8.37

O.D.Δ	Part No.	Description	Wt.	Type‡	M	K
7.4	**455894**	8C7.0–SF	32.0	A1	4.00	3.06
8.4	**455895**	8C8.0–E	49.0	A1	3.25	2.05
8.9	**455896**	8C8.5–E	53.0	A1	3.25	2.05
9.4	**455897**	8C9.0–F	68.0	A1	2.50	1.08
9.9	**455898**	8C9.5–F	74.0	A1	2.50	1.08
10.4	**455899**	8C10.0–F	73.0	A1	2.50	1.08
10.9	**455900**	8C10.5–F	74.0	A1	2.50	1.08
11.4	**455901**	8C11.0–F	78.0	A1	3.38	1.95
12.4	**455902**	8C12.0–F	86.0	A1	3.38	1.95
13.4	**455903**	8C13.0–F	93.0	A1	3.38	1.95
14.4	**455904**	8C14.0–F	102.0	A1	3.38	1.95
16.4	**455905**	8C16.0–F	116.0	A3	3.38	1.95
18.4	**455906**	8C18.0–F	133.0	A3	3.63	2.20
20.4	**455907**	8C20.0–J	147.0	D3	1.56	0.04
24.4	**455908**	8C24.0–J	179.0	D3	1.56	0.04
27.4	**456085**	8C27.0–J	205.0	D3	1.56	0.04
30.4	**455909**	8C30.0–J	233.0	D3	1.56	0.04
36.4	**455910**	8C36.0–M	339.0	A3	1.94	0.20
44.4	**455911**	8C44.0–M	428.0	A3	1.94	0.20
50.4	**455912**	8C50.0–M	502.0	A3	1.94	0.20

12-Groove — F = 12.37

O.D.Δ	Part No.	Description	Wt.	Type‡	M	K
9.4	**455930**	12C9.0–J	92.0	A1	4.06	2.46
9.9	**455931**	12C9.5–J	100.0	A1	4.06	2.46
10.4	**455932**	33˙12C10.0–J	108.0	A1	4.06	2.46
10.9	**455933**	12C10.5–J	115.0	A1	4.06	2.46
11.4	**455934**	12C11.0–J	125.0	A1	4.06	2.46
12.4	**455935**	12C12.0–J	127.0	A1	4.06	2.46
13.4	**455936**	12C13.0–J	135.0	A1	4.06	2.46
14.4	**455937**	12C14.0–J	145.0	A1	4.06	2.46
16.4	**455938**	12C16.0–J	165.0	A2	4.06	2.46
18.4	**455939**	12C18.0–J	198.0	A3	4.06	2.46
20.4	**455940**	12C20.0–M	277.0	A3	1.94	0.20
24.4	**455941**	12C24.0–M	287.0	A3	1.94	0.20
30.4	**455942**	12C30.0–M	362.0	A3	1.94	0.20
36.4	**455943**	12C36.0–M	446.0	A3	1.94	0.20
44.4	**455944**	12C44.0–M	572.0	A3	1.94	0.20
50.4	**455945**	12C50.0–M	676.0	A3	1.94	0.20

6-Groove — F = 6.37

O.D.Δ	Part No.	Description	Wt.	Type‡	M	K
6.4	**455873**	+6C6.0–SF	15.0	A1	1.94	1.00
7.4	**455874**	6C7.0–SF	29.0	A1	1.94	1.00
7.9	**455875**	6C7.5–SF	31.0	A1	1.94	1.18
8.4	**455876**	6C8.0–E	42.0	A1	2.38	1.18
8.9	**455877**	8C8.5–E	46.0	A1	2.38	1.02
9.4	**455878**	6C9.0–F	60.0	A1	2.44	1.02
9.9	**455879**	6C9.5–F	66.0	A1	2.44	1.02
10.4	**455880**	6C10.0–F	64.0	A1	2.44	1.02
10.9	**455881**	6C10.5–F	65.0	A1	2.44	1.02
11.4	**455882**	6C11.0–F	68.0	A1	2.44	1.02
12.4	**455883**	6C12.0–F	73.0	A1	2.44	1.02
13.4	**455884**	6C13.0–F	76.0	A2	2.50	1.08
14.4	**455885**	6C14.0–F	85.0	A2	2.44	1.02
16.4	**455886**	6C16.0–F	96.0	A3	2.44	1.02
18.4	**455887**	6C18.0–F	90.0	A3	2.63	1.20
20.4	**455888**	6C20.0–F	100.0	A3	1.94	0.52
24.4	**455889**	6C24.0–F	126.0	A3	1.94	0.52
27.4	**456084**	6C27.0–J	169.0	D3	0.56	0.04
30.4	**455890**	6C30.0–J	191.0	D3	1.56	0.04
36.4	**455891**	6C36.0–J	239.0	D3	1.56	0.04
44.4	**455892**	6C44.0–J	310.0	D3	1.56	0.04
50.4	**455893**	6C50.0–J	415.0	B3	1.94	0.34

10-Groove — F = 10.37

O.D.Δ	Part No.	Description	Wt.	Type‡	M	K
8.4	**455913**	10C8.0–E	76.0	A1	3.25	2.05
8.9	**455914**	10C8.5–E	80.0	A1	3.25	2.05
9.4	**455915**	10C9.0–J	84.0	A1	3.56	1.96
9.9	**455916**	10C9.5–J	91.0	A1	3.56	1.96
10.4	**455917**	10C10.0–J	99.0	A1	3.56	1.96
10.9	**455918**	10C10.5–J	106.0	A1	3.56	1.96
11.4	**455919**	10C11.0–J	115.0	A1	3.56	1.96
12.4	**455920**	10C12.0–J	114.0	A1	3.56	1.96
13.4	**456061**	10C13.0–J	119.0	A1	3.56	1.96
14.4	**455921**	10C14.0–J	128.0	A1	3.63	2.02
16.4	**455922**	10C16.0–J	147.0	A1	3.56	1.96
18.4	**455923**	10C18.0–J	156.0	A3	3.56	1.96
20.4	**455924**	10C20.0–J	171.0	A3	3.56	1.96
24.4	**455925**	10C24.0–M	257.0	A3	1.94	0.20
30.4	**455926**	10C30.0–M	321.0	A3	1.94	0.20
36.4	**455927**	10C36.0–M	393.0	A3	1.94	0.20
44.4	**455928**	10C44.0–M	500.0	A3	1.94	0.20
50.4	**455929**	10C50.0–M	589.0	A3	1.94	0.20

Δ Pitch Diameter = O.D.

‡ Type 1 = Block Type, 2 = Web, 3 = Arm – See page PT7-2.

+ Recommended CX Belt only

D QD SHEAVES - Heavy Duty

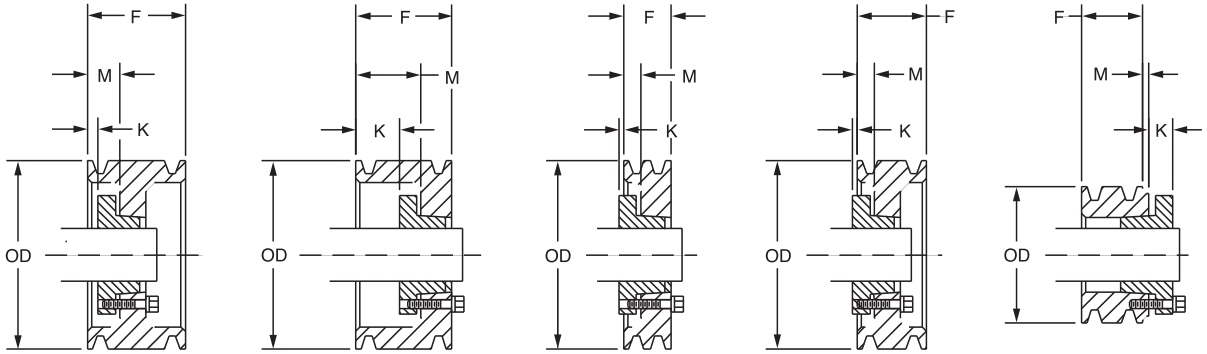

TYPE A TYPE B TYPE C TYPE D TYPE E

3-Groove						F = 4.62
O.D.Δ	Part No.	Description	Wt.	Type‡	M	K
12.6	**455946**	3D 12.0–F	83.0	A1	1.50	0.08
13.6	**455947**	3D 13.0–F	88.0	A1	1.50	0.08
14.1	**455948**	3D 13.5–F	88.0	A1	1.50	0.08
14.6	**455949**	3D 14.0–F	111.0	A1	1.50	0.08
15.1	**455950**	3D 14.5–F	111.0	A1	1.50	0.08
15.6	**455951**	3D 15.0–F	105.0	A2	1.50	0.08
16.1	**455952**	3D 15.5–F	105.0	A2	1.50	0.08
16.6	**455953**	3D 16.0–F	150.0	A2	1.50	0.08
18.6	**455954**	3D 18.0–J	146.0	D2	1.19	0.41
20.6	**455955**	3D 20.0–J	117.0	D2	1.19	0.41
22.6	**455956**	3D 22.0–J	128.0	D2	1.19	0.41
27.6	**455957**	3D 27.0–J	129.0	D3	1.19	0.41
33.6	**455958**	3D 33.0–J	200.0	D3	1.19	0.41

4-Groove						F = 6.06
O.D.Δ	Part No.	Description	Wt.	Type‡	M	K
12.6	**455960**	4D 12.0–F	85.0	A1	2.31	0.89
13.6	**455961**	4D 13.0–F	76.0	A1	2.31	0.89
14.1	**455962**	4D 13.5–F	107.0	A1	2.31	0.89
14.6	**455983**	4D 14.0–F	106.0	A2	2.31	0.89
15.1	**455964**	4D 14.5–F	106.0	A2	2.31	0.89
15.6	**455965**	4D 15.0–F	110.0	A2	2.31	0.89
16.1	**455966**	4D 15.5–F	110.0	A2	2.31	0.89
16.6	**455967**	4D 16.0–F	150.0	A2	2.31	0.89
18.6	**455968**	4D 18.0–J	146.0	D2	1.56	0.04
20.6	**455969**	4D 20.0–J	137.0	D2	1.56	0.04
22.6	**455970**	4D 22.0–J	151.0	D2	1.56	0.04
27.6	**455971**	4D 27.0–J	190.0	D3	1.56	0.04
33.6	**455972**	4D 33.0–M	288.0	C3	1.06	0.68
40.6	**455973**	4D 40.0–M	354.0	C3	1.06	0.68
48.6	**455974**	4D 48.0–M	439.0	C3	1.06	0.68

5-Groove						F = 7.50
O.D.Δ	Part No.	Description	Wt.	Type‡	M	K
12.6	**455976**	5D 12.0–F	98.0	A1	3.06	1.64
13.6	**455977**	5D 13.0–F	114.0	A1	3.06	1.64
14.1	**455978**	5D 13.5–F	134.0	A1	3.06	1.64
14.6	**455979**	5D 14.0–F	140.0	A1	3.06	1.64
15.1	**455980**	5D 14.5–F	140.0	A1	3.06	1.64
15.6	**455981**	5D 15.0–F	146.0	A2	3.06	1.64
16.1	**455982**	5D 15.5–F	146.0	A2	3.06	1.64
16.6	**455983**	5D 16.0–F	143.0	A2	3.06	1.64
18.6	**455984**	5D 18.0–J	164.0	D2	1.56	0.04
20.6	**455985**	5D 20.0–J	157.0	D2	0.69	0.91
22.6	**455986**	5D 22.0–J	174.0	D3	1.56	0.04
27.6	**455987**	5D 27.0–M	268.0	A3	1.94	0.20
33.6	**455988**	5D 33.0–M	329.0	A3	1.94	0.20
40.6	**455989**	5D 40.0–M	408.0	A3	1.94	0.20
48.6	**455990**	5D 48.0–M	510.0	A3	1.94	0.20

6-Groove						F = 8.93
O.D.Δ	Part No.	Description	Wt.	Type‡	M	K
12.6	**455992**	6D 12.0–J	126.0	A1	3.31	1.71
13.6	**455993**	6D 13.0–J	140.0	A1	3.31	1.71
14.1	**455994**	6D 13.5–J	140.0	A1	3.31	1.71
14.6	**455995**	6D 14.0–J	159.0	A1	3.31	1.71
15.1	**455996**	6D 14.5–J	162.0	A1	3.31	1.71
15.6	**455997**	6D 15.0–J	162.0	A2	3.31	1.71
16.1	**455998**	6D 15.5–J	162.0	A2	3.31	1.71
16.6	**456000**	6D 16.0–J	199.0	A1	3.88	2.27
18.6	**456001**	6D 18.0–J	223.0	A2	3.88	2.27
20.6	**456002**	6D 20.0–J	178.0	A2	3.88	2.27
22.6	**456003**	6D 22.0–M	246.0	A2	3.16	1.42
27.6	**456004**	6D 27.0–M	298.0	A3	1.94	0.20
33.6	**456005**	6D 33.0–M	369.0	A3	1.94	0.20
40.6	**456006**	6D 40.0–M	462.0	A3	1.94	0.20
48.6	**456007**	6D 48.0–M	581.0	A3	1.94	0.20
58.6	**456008**	6D 58.0–N	764.0	D3	1.34	0.71

Δ Pitch Diameter = O.D.

‡ **Type 1 = Block Type, 2 = Web, 3 = Arm – See page PT7-2.**

SELECTION/DIMENSIONS

D QD SHEAVES - Heavy Duty

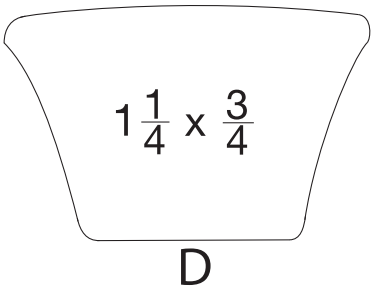

8-Groove					F = 11.81	
O.D.Δ	Part No.	Description	Wt.	Type‡	M	K
12.6	**456009**	8D 12.0–J	151.0	A1	3.56	1.96
13.6	**456010**	8D 13.0–J	168.0	A1	3.56	1.96
14.1	**456011**	8D 13.5–J	168.0	A1	3.56	1.96
14.6	**456015**	8D 14.0–J	181.0	A1	3.56	1.96
15.1	**456016**	8D 14.5–J	181.0	A1	3.56	1.96
15.6	**456017**	8D 15.0–J	216.0	A1	3.56	1.96
16.1	**456018**	8D 15.5–J	216.0	A1	3.56	1.96
16.6	**456019**	8D 16.0–J	237.0	A1	3.56	1.96
18.6	**456020**	8D 18.0–M	249.0	A2	4.19	2.45
20.6	**456021**	8D 20.0–M	299.0	A2	4.38	2.64
22.6	**456022**	8D 22.0–M	292.0	A2	2.34	0.60
27.6	**456023**	8D 27.0–M	360.0	A3	2.19	0.45
33.6	**456024**	8D 33.0–M	451.0	A3	1.94	0.20
40.6	**456025**	8D 40.0–N	588.0	A3	2.25	0.20
48.6	**456026**	8D 48.0–N	739.0	A3	2.25	0.20
58.6	**456027**	8D 58.0–N	950.0	D3	2.78	0.73

Δ Pitch Diameter = O.D.

‡ **Type 1 = Block Type, 2 = Web, 3 = Arm – See page PT7-2.**

10-Groove					F = 14.68	
O.D.Δ	Part No.	Description	Wt.	Type‡	M	K
12.6	**456028**	10D 12.0–M	153.0	A1	3.94	2.20
13.6	**456029**	10D 13.0–M	180.0	A1	3.81	2.07
14.1	**456030**	10D 13.5–M	186.0	A1	3.94	2.20
14.6	**456031**	10D 14.0–M	221.0	A1	3.81	2.07
15.1	**456032**	10D 14.5–M	221.0	A1	3.81	2.07
15.6	**456033**	10D 15.0–M	247.0	A1	3.94	2.20
16.1	**456034**	10D 15.5–M	270.0	A1	3.94	2.20
16.6	**456035**	10D 16.0–M	267.0	A1	1.88	0.14
18.6	**456036**	10D 18.0–M	274.0	A1	3.88	2.14
20.6	**456037**	10D 20.0–M	341.0	A2	3.50	1.76
22.6	**456038**	10D 22.0–M	339.0	A2	2.94	1.20
27.6	**456039**	10D 27.0–M	422.0	A3	2.94	1.20
33.6	**456040**	10D 33.0–N	552.0	A3	3.25	1.20
40.6	**456041**	10D 40.0–N	696.0	A3	3.38	1.33
48.6	**456042**	10D 48.0–P	926.0	A3	2.63	0.32
58.6	**456043**	10D 58–P	1179.0	D3	3.72	1.42

WARNING: The sheaves listed in this catalog must not be used with the high modulus belts unless approved by factory. Do not use with belt speeds exceeding 6500 fpm. May cause sheaves to fragment resulting in personal injury or property damage.

12-Groove				F = 17.56		
O.D.Δ	Part No.	Description	Wt.	Type‡	M	K
12.6	**456044**	12D12.0--M	180.0	A-1	7.31	4.94
12.6	**456045**	12D13.0--M	230.0	A-1	7.31	4.94
14.6	**456047**	12D14.0--M	256.0	A-1	7.31	4.94
15.1	**456048**	12D14.5-M	270.0	A-1	7.31	4.94
15.6	**456049**	12D15.0--M	285.0	A-1	7.31	4.94
16.1	**456050**	12D15.5--M	285.0	A-1	7.31	4.94
16.6	**456051**	12D16.0--M	300.0	A-2	7.31	4.94
18.6	**456052**	12D18.0-M	320.0	A-2	7.31	4.94
22.6	**456054**	12D22.0--M	376.0	A-3	8.31	3.94
27.6	**456055**	12D27.0--N	500.0	A-3	6.94	4.25
33.6	**456056**	12D33.0--N	662.0	A-3	6.94	4.25
40.6	**456057**	12D40.0-P	850.0	A-3	7.56	2.63
48.6	**456059**	12D48.0-P	1100.0	A-3	7.56	2.63
58.6	**456060**	12D58.0-P	1158.0	A-3	7.56	2.63

Pitch Diameter = O.D.

‡ **Type 1 = Block Type, 2 = Web, 3 = Arm – See page PT7-2**

3V QD SHEAVES - Standard Duty

1-Groove — F= .69 up to and including 10.60 O.D. Balance .81

O.D.Δ	Part No.	Description	Wt.	Type‡	M	K
# 2.20	**D1-3V22**	1/3V2.2-JA	0.8	E1	0.00	1.02
# 2.35	**D1-3V235**	1/3V2.35-JA	0.85	E1	0.00	1.02
# 2.50	**D1-3V25**	1/3V2.5-JA	0.92	E1	0.00	1.02
2.65	**D1-3V265**	1/3V2.65-JA	0.5	D1	0.06	0.45
2.80	**D1-3V28**	1/3V2.8-JA	0.7	D1	0.06	0.45
3.00	**D1-3V30**	1/3V3.0-JA	0.7	D1	0.06	0.45
3.15	**D1-3V315**	1/3V3.15-JA	0.7	D1	0.06	0.45
3.35	**D1-3V335**	1/3V3.35-JA	1.1	D1	0.06	0.45
3.65	**D1-3V365**	1/3V3.65-SH	1.3	E1	0.00	0.63
4.12	**D1-3V412**	1/3V4.12-SH	1.8	E1	0.00	0.63
4.50	**D1-3V45**	1/3V4.5-SH	2.2	E1	0.00	0.63
4.75	**D1-3V475**	1/3V4.75-SH	2.2	E1	0.00	0.63
5.00	**D1-3V50**	1/3V5.0-SH	2.9	E1	0.00	0.63
5.30	**D1-3V53**	1/3V5.3-SH	3.3	E1	0.00	0.63
5.60	**D1-3V56**	1/3V5.6-SH	3.7	E1	0.00	0.63
6.00	**D1-3V60**	1/3V6.0-SH	3.9	E2	0.00	0.63
6.50	**D1-3V65**	1/3V6.5-SH	4.9	E2	0.00	0.63
6.90	**D1-3V69**	1/3V6.9-SH	5.5	E2	0.00	0.63
8.00	**D1-3V80**	1/3V8.0-SDS	5.1	E3	0.00	0.69
10.60	**D1-3V106**	1/3V10.6-SDS	8.6	E3	0.00	0.69
14.00	**D1-3V140**	1/3V14.0-SK	15.3	C3	0.00	0.81
19.00	**D1-3V190**	1/3V19.0-SK	18.3	C3	0.00	0.91

2-Groove — F = 1.09

O.D.Δ	Part No.	Description	Wt.	Type‡	M	K
# 2.20	**D2-3V22**	2/3V2.2-JA	0.9	E1	0.00	1.02
# 2.35	**D2-3V235**	2/3V2.35-JA	1.0	E1	0.00	1.02
# 2.50	**D2-3V25**	2/3V2.5-JA	1.1	E1	0.00	1.02
## 2.65	**D2-3V265**	2/3V2.65-JA	0.8	D1	0.13	0.39
## 2.80	**D2-3V28**	2/3V2.8-JA	1.0	D1	0.13	0.39
## 3.00	**D2-3V30**	2/3V3.0-JA	1.2	D1	0.13	0.39
## 3.15	**D2-3V315**	2/3V3.15-JA	1.4	D1	0.13	0.39
## 3.35	**D2-3V335**	2/3V3.35-SH	1.2	D1	0.13	0.50
## 3.65	**D2-3V365**	2/3V3.65-SH	1.6	D1	0.13	0.50
4.12	**D2-3V412**	2/3V4.12-SH	2.2	D1	0.34	0.28
4.50	**D2-3V45**	2/3V4.5-SH	2.7	D1	0.34	0.28
4.75	**D2-3V475**	2/3V4.75-SH	3.2	D1	0.34	0.28
5.00	**D2-3V50**	2/3V5.0-SH	3.7	D1	0.34	0.28
5.30	**D2-3V53**	2/3V5.3-SH	4.2	D1	0.34	0.28
5.60	**D2-3V56**	2/3V5.6-SH	4.6	D1	0.34	0.28
6.00	**D2-3V60**	2/3V6.0-SH	5.0	D2	0.34	0.28
6.50	**D2-3V65**	2/3V6.5-SDS	5.8	D2	0.31	0.38
6.90	**D2-3V69**	2/3V6.9-SDS	6.4	D2	0.31	0.38
8.00	**D2-3V80**	2/3V8.0-SDS	6.6	D3	0.31	0.38
10.60	**D2-3V106**	2/3V10.6-SK	11.7	C3	0.19	0.63
14.00	**D2-3V140**	2/3V14.0-SK	17.9	C3	0.19	0.63
19.00	**D2-3V190**	2/3V19.0-SK	26.6	E3	0.00	0.81
25.00	**D2-3V250**	2/3V25.0--SF	33.4	C3	0.00	0.81

3-Groove — F = 1.50

O.D.Δ	Part No.	Description	Wt.	Type‡	M	K
## 2.65	**D3-3V265**	3/3V2.65-JA	1.1	D1	0.13	0.39
## 2.80	**D3-3V28**	3-3V2.8-JA	1.3	D1	0.13	0.39
#* 3.00	**D3-3V30**	3/3V3.0-SH	1.6	E1	0.00	1.03
#* 3.15	**D3-3V315**	3/3V3.15-SH	2.0	E1	0.00	1.00
## 3.35	**D3-3V3.35**	3/3V3.35-SH	1.8	D1	0.06	0.56
## 3.65	**D3-3V365**	3/3V3.65-SH	2.4	D1	0.06	0.56
4.12	**D3-3V412**	3/3V4.12-SH	2.7	D1	0.63	0.00
4.50	**D3-3V450**	3/3V4.50-SDS	3.0	D1	0.69	0.00
4.75	**D3-3V475**	3/3V4.75-SDS	3.7	D1	0.69	0.00
5.00	**D3-3V50**	3/3V5.0-SDS	4.2	D1	0.69	0.00
5.30	**D3-3V53**	3/3V5.3-SDS	4.7	D1	0.69	0.00
5.60	**D3-3V56**	3/3V5.6-SDS	5.2	D1	0.69	0.00
6.00	**D3-3V60**	3/3V6.0-SDS	6.2	D1	0.69	0.00
6.50	**D3-3V65**	3/3V6.5-SDS	6.7	D2	0.69	0.00
6.90	**D3-3V69**	3/3V6.9-SDS	7.5	D2	0.69	0.00
8.00	**D3-3V80**	3/3V8.0-SK	9.8	D3	0.19	0.63
10.60	**D3-3V106**	3/3V10.6-SK	14.0	D3	0.19	0.63
14.00	**D3-3V140**	3/3V14.0-SK	19.4	D3	0.19	0.63
19.00	**D3-3V190**	3/3V19.0--SF	32.1	E3	0.00	0.81
25.00	**D3-3V250**	3/3V25.0-SF	38.5	E3	0.00	0.81
33.50	**D3-3V335**	3/3V33.5-SF	79.3	D3	0.10	0.72

* For 3-3V3.00; F=1.912", For 3-3V3.15; F=1 7/8

4-Groove — F = 1.90

O.D.Δ	Part No.	Description	Wt.	Type‡	M	K
## 2.65	**D4-3V2.65**	4/3V2.65-JA	1.4	D1	0.13	0.39
## 2.80	**D4-3V28**	4/3V2.8-JA	1.6	D1	0.13	0.39
# 3.00	**D4-3V30**	4/3V3.0-SH	2.3	E1	0.00	1.03
# 3.15	**D4-3V315**	4/3V3.15-SH	2.7	E1	0.00	1.00
## 3.35	**D4-3V3.35**	4/3V3.35-SH	2.3	D1	0.13	0.50
## 3.65	**D4-3V365**	4/3V3.65-SH	3.1	D1	0.13	0.50
4.12	**D4-3V412**	4/3V4.12-SH	3.2	A1	0.81	0.19
4.50	**D4-3V45**	4/3V4.5-SDS	3.4	A1	0.88	0.19
4.75	**D4-3V475**	4/3V4.75-SDS	4.4	A1	0.81	0.13
5.00	**D4-3V50**	4/3V5.0-SDS	5.0	A1	0.81	0.13
5.30	**D4-3V53**	4/3V5.3-SDS	6.0	A1	0.75	0.13
5.60	**D4-3V56**	4/3V5.6-SDS	6.2	A1	0.81	0.13
6.00	**D4-3V60**	4/3V6.0-SK	7.8	D1	0.56	0.25
6.50	**D4-3V65**	4/3V6.5-SK	9.5	D1	0.56	0.25
6.90	**D4-3V69**	4/3V6.9-SK	11.1	D1	0.56	0.25
8.00	**D4-3V80**	4/3V8.0-SK	11.2	D3	0.56	0.25
10.60	**D4-3V106**	4/3V10.6-SK	16.0	D3	0.56	0.25
14.00	**D4-3V140**	4/3V14.0-SK	25.0	D3	0.56	0.25
19.00	**D4-3V190**	4/3V19.0-SF	39.8	C3	0.75	0.06
25.00	**D4-3V250**	4/3V25.0-SF	51.1	D3	0.38	0.44
33.50	**D4-3V335**	4/3V33.5-E	94.1	D3	0.28	0.78

P.D. for "3V" Belts = O.D.

‡ Type 1 = Block Type, 2 = Web, 3 = Arm – See page PT7-2

Reverse Mount Only

This sheave can only be reverse mounted with standard bushing bolts. Special bolts required for conventional mounting.

SELECTION/DIMENSIONS

5V QD SHEAVES - Standard Duty

5-Groove						F = 2.31
O.D.Δ	Part No.	Description	Wt.	Type‡	M	K
4.75	**D5-3V475**	5/3V4.75-SDS	4.7	A1	0.81	0.13
5.00	**D5-3V50**	5/3V5.0-SDS	6	A1	0.81	0.13
5.30	**D5-3V53**	5/3V5.3-SK	6.2	A1	0.88	0.06
5.60	**D5-3V56**	5/3V5.6-SK	7.4	A1	0.84	0.03
6.00	**D5-3V60**	5/3V6.0-SK	8.8	A1	0.88	0.06
6.50	**D5-3V65**	5/3V6.5-SK	9.9	A1	0.88	0.06
6.90	**D5-3V69**	5/3V6.9-SK	11.5	A1	0.84	0.03
8.00	**D5-3V80**	5/3V8.0-SK	14.5	A2	0.88	0.06
10.60	**D5-3V106**	5/3V10.6-SK	19.3	A3	0.97	0.16
14.00	**D5-3V140**	5/3V14.0-SF	26.5	D3	0.72	0.09
19.00	**D5-3V190**	5/3V19.0-SF	33.9	A3	0.91	0.09
25.00	**D5-3V250**	5/3V25.0-E	60.7	D3	0.63	0.44
33.50	**D5-3V335**	5/3V33.5-E	107	D3	0.69	0.38

6-Groove						F = 2.72
O.D.Δ	Part No.	Description	Wt.	Type‡	M	K
# 4.75	**D6-3V475**	6/3V4.75-SK	5.8	E1	0.00	0.81
# 5.00	**D6-3V50**	6/3V5.0-SK	7.1	E1	0.00	0.81
5.30	**D6-3V53**	6/3V5.3-SK	6.8	A1	1.28	0.47
5.60	**D6-3V56**	6/3V5.6-SK	8.2	A1	1.25	0.44
6.00	**D6-3V60**	6/3V6.0-SK	9.7	A1	1.25	0.44
6.50	**D6-3V65**	6/3V6.5-SK	10.8	A1	0.88	0.06
6.90	**D6-3V69**	6/3V6.9-SK	12.2	A1	1.25	0.44
8.00	**D6-3V80**	6/3V8.0-SK	16	A2	0.88	0.06
10.60	**D6-3V106**	6/3V10.6-SF	18.7	A3	0.97	0.16
14.00	**D6-3V140**	6-3V14.0-SF	30.5	A3	0.90	0.09
19.00	**D6-3V190**	6/3V19.0-E	47.6	D3	1.03	0.03
25.00	**D6-3V250**	6/3V25.0-E	66.9	D3	1.03	0.03
33.50	**D6-3V335**	6/3V33.5-E	121.6	A3	1.09	0.03

8-Groove						F = 3.53
O.D.Δ	Part No.	Description	Wt.	Type‡	M	K
# 4.75	**D8-3V475**	8/3V4.75-SK	7.2	E1	0.00	0.81
# 5.00	**D8-3V50**	8/3V5.0-SK	8.9	E1	0.00	0.81
5.30	**D8-3V53**	8/3V5.3-SK	8.3	A1	1.25	0.44
5.60	**D8-3V56**	8/3V5.6-SK	9.5	A1	1.25	0.44
6.00	**D8-3V60**	8/3V6.0-SK	11.7	A1	1.25	0.44
6.50	**D8-3V65**	8/3V6.5-SK	13.6	A1	1.25	0.44
6.90	**D8-3V69**	8/3V6.9-SK	15.4	A1	1.25	0.44
8.00	**D8-3V80**	8/3V8.0-SF	19.2	A2	1.13	0.31
10.60	**D8-3V106**	8/3V10.6-SF	22.5	A3	0.97	0.16
14.00	**D8-3V140**	8/3V14.0-E	42.9	D3	0.94	0.13
19.00	**D8-3V190**	8/3V19.0-E	66.6	D3	0.94	0.13
25.00	**D8-3V250**	8/3V25.0-E	92.2	D3	0.88	0.19
33.50	**D8-3V335**	8/3V33.5-F	153	D3	0.75	0.47

10-Groove						F = 4.34
O.D.Δ	Part No.	Description	Wt.	Type‡	M	K
# 4.75	**D10-3V475**	10/3V4.75-SK	8.6	E1	0.00	0.81
# 5.00	**D10-3V50**	10/3V5.0-SK	10.7	E1	0.00	0.81
5.30	**D10-3V53**	10/3V5.3-SK	9.6	A1	1.38	0.56
5.60	**D10-3V56**	10-3V5.6-SK	11.9	A1	1.38	0.56
6.00	**D10-3V60**	10/3V6.0-SK	13.45	A1	1.38	0.56
6.50	**D10-3V65**	10/3V6.5-SK	14.1	A1	1.38	0.56
6.90	**D10-3V69**	10/3V6.9-SK	17.5	A1	1.38	0.56
8.00	**D10-3V80**	10/3V8.0-SF	21.55	A2	1.50	0.69
10.60	**D10-3V106**	10/3V10.6-E	31.6	D2	1.06	0.00
14.00	**D10-3V140**	10/3V14.0-E	41.6	D3	1.06	0.00
19.00	**D10-3V190**	10/3V19.0-E	74	D3	1.06	0.00
25.00	**D10-3V250**	10/3V25.0--F	105	D3	1.16	0.06
33.50	**D10-3V335**	10/3V33.5-F	180	D3	1.16	0.06

Reverse Mount Only

P.D. for "3V" Belts = O.D.

‡ Type 1 = Block Type, 2 = Web, 3 = Arm – See page PT7-2

5V QD SHEAVES - Standard Duty

2-Groove						F = 1.69
O.D.Δ	Part No.	Description	Wt.	Type‡	M	K
# + 4.40	**D2-5V44**	2/5V4.4-SH	3.4	D1	0.16	0.47
## + 4.65	**D2-5V465**	2/5V4.65-SDS	3.6	E1	0.00	0.69
+ 4.90	**D2-5V49**	2/5V4.9-SDS	3.9	D1	0.69	0.22
+ 5.20	**D2-5V52**	2/5V5.2-SDS	4.8	D1	0.47	0.22
+ 5.50	**D2-5V55**	2/5V5.5-SDS	5.5	D1	0.47	0.22
+ 5.90	**D2-5V59**	2/5V5.9-SDS	6.5	D1	0.47	0.22
+ 6.30	**D2-5V63**	2/5V6.3-SK	9.6	D1	0.38	0.44
+ 6.70	**D2-5V67**	2/5V6.7-SK	9.3	D1	0.38	0.44
7.10	**D2-5V71**	2/5V7.1-SK	10.6	D1	0.44	0.38
7.50	**D2-5V75**	2/5V7.5-SK	12.1	D1	0.44	0.38
8.00	**D2-5V80**	2/5V8.0-SK	14.3	D1	0.44	0.38
8.50	**D2-5V85**	2/5V8.5-SK	16.2	D1	0.44	0.38
9.00	**D2-5V90**	2/5V9.0-SK	18.5	D1	0.44	0.38
9.25	**D2-5V925**	2/5V9.25-SK	17	D2	0.44	0.38
9.75	**D2-5V975**	2/5V9.75-SK	18.2	D2	0.44	0.38
10.30	**D2-5V103**	2/5V10.3-SK	18	D2	0.44	0.38
10.90	**D2-5V109**	2/5V10.9-SK	20.8	D2	0.44	0.38
11.30	**D2-5V113**	2/5V11.3-SK	16.9	D3	0.44	0.38
11.80	**D2-5V118**	2/5V11.8-SK	18.6	D3	0.44	0.38
12.50	**D2-5V125**	2/5V12.5-SF	20.8	D3	0.44	0.38
13.20	**D2-5V132**	2/5V13.2-SF	22	D3	0.44	0.38
14.00	**D2-5V140**	2/5V14.0-SF	24.8	D3	0.44	0.38
15.00	**D2-5V150**	2/5V15.0-SF	26.6	D3	0.44	0.38
16.00	**D2-5V160**	2/5V16.0-SF	34.9	D3	0.44	0.38
18.70	**D2-5V187**	2/5V18.7-SF	43.8	D3	0.44	0.38
21.20	**D2-5V212**	2/5V21.2--SF	43.8	D3	0.44	0.38
23.60	**D2-5V236**	2/5V23.6--E	61.7	C3	0.75	0.31
28.00	**D2-5V280**	2/5V28.0-E	73	C3	0.75	0.31
31.50	**- - -**	- - -	- - -	- - -	- - -	- - -
37.50	**- - -**	- - -	- - -	- - -	- - -	- - -
50.00	**- - -**	- - -	- - -	- - -	- - -	- - -

3-Groove						F = 2.38
O.D.Δ	Part No.	Description	Wt.	Type‡	M	K
# + 4.40	**D3-5V44**	3/5V4.4-SDS	4.3	E1	0.00	0.69
# + 4.65	**D3-5V465**	3/5V4.65-SDS	5.2	E1	0.00	0.69
+ 4.90	**D3-5V49**	3/5V4.9-SDS	4.9	A1	1.06	0.38
+ 5.20	**D3-5V52**	3/5V5.2-SDS	6.1	A1	1.06	0.38
+ 5.50	**D3-5V55**	3/5V5.5-SDS	6.4	A1	1.00	0.31
+ 5.90	**D3-5V59**	3/5V5.9-SDS	8.2	A1	1.00	0.31
+ 6.30	**D3-5V63**	3/5V6.3-SK	9	A1	1.25	0.25
+ 6.70	**D3-5V67**	3/5V6.7-SK	12.7	A1	1.06	0.25
7.10	**D3-5V71**	3/5V7.1-SF	12.3	D1	0.75	0.06
7.50	**D3-5V75**	3/5V7.5-SF	13.8	D1	0.75	0.06
8.00	**D3-5V80**	3/5V8.0-SF	16.2	D1	0.75	0.06
8.50	**D3-5V85**	3/5V8.5-SF	18.3	D1	0.75	0.06
9.00	**D3-5V90**	3/5V9.0-SF	20.6	D1	0.75	0.06
9.25	**D3-5V925**	3/5V9.25-SF	20.2	D2	0.75	0.06
9.75	**D3-5V975**	3/5V9.75-SF	20.8	D2	0.75	0.06
10.30	**D3-5V103**	3/5V10.3-SF	20.5	D2	1.00	0.06
10.90	**D3-5V109**	3/5V10.9-SF	23.4	D2	0.75	0.06
11.30	**D3-5V113**	3/5V11.3-SF	22.7	D3	0.75	0.06
11.80	**D3-5V118**	3/5V11.8-SF	24.4	D3	0.75	0.06
12.50	**D3-5V125**	3/5V12.5-E	31.1	D3	0.38	0.69
13.20	**D3-5V132**	3/5V13.2-E	32.2	D3	0.38	0.69
14.00	**D3-5V140**	3/5V14.0-E	35.5	D3	0.75	0.69
15.00	**D3-5V150**	3/5V15.0-E	38.3	D3	0.38	0.69
16.00	**D3-5V160**	3/5V16.0-E	40.1	D3	0.38	0.69
18.70	**D3-5V187**	3/5V18.7-E	46.6	D3	0.75	0.31
21.20	**D3-5V212**	3/5V21.2-E	57.2	D3	0.38	0.69
23.60	**D3-5V236**	3/5V23.6-E	73	D3	0.72	0.34
28.00	**D3-5V280**	3/5V28.0-E	97	D3	0.75	0.31
31.50	**D3-5V315**	3/5V31.5--F	128	C3	0.25	0.97
37.50	**D3-5V375**	3/5V37.5--F	158	C3	0.25	0.97
50.00	**D3-5V500**	3/5V50.0-F	218	C3	0.25	0.97

+ 5VX Belts only on these sizes.

Reverse Mount Only

This sheave can only be reverse mounted with standard bushing bolts. Special bolts required for conventional mounting.

P.D. for "5V" Belts = O.D.

‡ Type 1 = Block Type, 2 = Web, 3 = Arm – See page PT7-2.

SELECTION/DIMENSIONS

5V QD SHEAVES - Standard Duty

4-Groove — **F = 3.06**

O.D.Δ	Part No.	Description	Wt.	Type‡	M	K
# + 4.40	**D4-5V44**	4/5V4.4-SD	5.4	E1	0.00	0.69
# + 4.65	**D4-5V465**	4/5V4.65-SD	6.1	E1	0.00	0.69
+ 4.90	**D4-5V49**	4/5V4.9-SD	6.5	A1	1.31	0.63
+ 5.20	**D4-5V52**	4/5V5.2-SD	8.2	A1	1.31	0.63
+ 5.50	**D4-5V55**	4/5V5.5-SD	9.4	A1	1.31	0.63
+ 5.90	**D4-5V59**	4/5V5.9-SD	10	A1	1.31	0.63
+ 6.30	**D4-5V63**	4/5V6.3-SK	11.7	A1	1.31	0.50
+ 6.70	**D4-5V67**	4/5V6.7-SK	13.4	A1	1.31	0.50
7.10	**D4-5V71**	4/5V7.1-SF	14.5	D1	0.81	0.00
7.50	**D4-5V75**	4/5V7.5-SF	16.3	D1	0.81	0.00
8.00	**D4-5V80**	4/5V8.0-E	17.9	D1	1.06	0.00
8.50	**D4-5V85**	4/5V8.5-E	21.7	D1	1.06	0.00
9.00	**D4-5V90**	4/5V9.0-E	24.4	D1	1.06	0.00
9.25	**D4-5V925**	4/5V9.25-E	26.2	D1	1.06	0.00
9.75	**D4-5V975**	4/5V9.75-E	29.4	A1	1.44	0.38
10.30	**D4-5V103**	4/5V10.3-E	28.6	D2	1.06	0.00
10.90	**D4-5V109**	4/5V10.9-E	30.3	D2	1.06	0.00
11.30	**D4-5V113**	4/5V11.3-E	30.9	A2	1.44	0.38
11.80	**D4-5V118**	4/5V11.8-E	32.5	D2	1.06	0.00
12.50	**D4-5V125**	4/5V12.5-E	35	A3	1.44	0.38
13.20	**D4-5V132**	4/5V13.2-E	37.4	D3	1.06	0.00
14.00	**D4-5V140**	4/5V14.0-E	41.1	D3	1.06	0.00
15.00	**D4-5V150**	4/5V15.0-E	43.7	D3	1.06	0.00
16.00	**D4-5V160**	4/5V16.0-E	46.9	D3	1.06	0.00
18.70	**D4-5V187**	4/5V18.7-E	58.5	A3	1.25	0.19
21.20	**D4-5V212**	4/5V21.2-E	77	A3	1.25	0.19
23.60	**D4-5V236**	4/5V23.6-F	98	D3	0.56	0.66
28.00	**D4-5V280**	4/5V28.0--F	118	D3	0.56	0.66
31.50	**D4-5V315**	4/5V31.5-F	141	C3	0.88	0.34
37.50	**D4-5V375**	4/5V37.5-F	178	D3	0.56	0.66
50.00	**D4-5V500**	4/5V50.0-J	269	C3	0.69	0.94

5-Groove — **F = 3.75**

O.D.Δ	Part No.	Description	Wt.	Type‡	M	K
# + 4.40	**D5-5V44**	5/5V4.4-SD	6.3	E1	0.00	0.69
# + 4.65	**D5-5V465**	5-5V4.65-SD	7	E1	0.00	0.69
+ 4.90	**D5-5V49**	5/5V4.9-SD	7.9	A1	1.31	0.63
+ 5.20	**D5-5V52**	5/5V5.2-SD	9.7	A1	1.31	0.63
+ 5.50	**D5-5V55**	5/5V5.5-SD	10.9	A1	1.31	0.63
+ 5.90	**D5-5V59**	5/5V5.9-SK	11.2	A1	1.31	0.50
+ 6.30	**D5-5V63**	5/5V6.3-SK	12.2	A1	1.31	0.50
+ 6.70	**D5-5V67**	5/5V6.7-SF	13.2	A1	1.31	0.50
7.10	**D5-5V71**	5/5V7.1-SF	16.7	A1	1.13	0.31
7.50	**D5-5V75**	5/5V7.5-SF	18.5	A1	1.13	0.31
8.00	**D5-5V80**	5/5V8.0-E	20	A1	1.38	0.31
8.50	**D5-5V85**	5/5V8.5-E	24.4	A1	1.38	0.31
9.00	**D5-5V90**	5/5V9.0-E	27.4	A1	1.38	0.31
9.25	**D5-5V925**	5/5V9.25-E	29.2	A1	1.38	0.31
9.75	**D5-5V975**	5/5V9.75-E	32.8	A1	1.38	0.31
10.30	**D5-5V103**	5/5V10.3-E	31.1	A2	1.38	0.31
10.90	**D5-5V109**	5/5V10.9-E	33	A2	1.38	0.31
11.30	**D5-5V113**	5/5V11.3-E	35	A2	1.38	0.31
11.80	**D5-5V118**	5/5V11.8-E	37.3	A2	1.38	0.31
12.50	**D5-5V125**	5/5V12.5-E	38.9	A2	1.38	0.31
13.20	**D5-5V132**	5/5V13.2-E	41.8	A2	1.38	0.31
14.00	**D5-5V140**	5/5V14.0-E	45.3	A3	1.38	0.31
15.00	**D5-5V150**	5/5V15.0-E	49.1	A3	1.38	0.31
16.00	**D5-5V160**	5/5V16.0-E	51.9	A3	1.38	0.31
18.70	**D5-5V187**	5/5V18.7-F	86	D3	0.94	0.28
21.20	**D5-5V212**	5/5V21.2-F	84.7	D3	1.00	0.22
23.60	**D5-5V236**	5/5V23.6-F	111	D3	1.00	0.22
28.00	**D5-5V280**	5/5V28.0-F	128	D3	1.00	0.22
31.50	**D5-5V315**	5/5V31.5--J	174	D3	0.27	0.30
37.50	**D5-5V375**	5/5V37.5-J	199	D3	0.53	0.88
50.00	**D5-5V500**	5/5V50.0-J	319	D3	0.53	0.88

+ 5VX Belts only on these sizes.

Reverse Mount Only

This sheave can only be reverse mounted with standard bushing bolts. Special bolts required for conventional mounting.

P.D. for "5V" Belts = O.D.

‡ Type 1 = Block Type, 2 = Web, 3 = Arm – See page PT7-2.

5V QD SHEAVES - Standard Duty

8-Groove — **F = 5.81**

O.D.Δ	Part No.	Description	Wt.	Type‡	M	K
7.10	**D8-5V71**	8/5V7.1-SF	23	A1	1.88	1.06
7.50	**D8-5V75**	8/5V7.5-SF	25.4	A1	1.88	1.06
8.00	**D8-5V80**	8/5V8.0-E	26	A1	2.13	1.06
8.50	**D8-5V85**	8/5V8.5-E	33	A1	2.13	1.06
9.00	**D8-5V90**	8/5V9.0-E	36	A1	2.13	1.06
9.25	**D8-5V925**	8/5V9.25-F	42	A1	2.25	1.03
9.75	**D8-5V975**	8/5V9.75-F	47	A1	2.25	1.03
10.30	**D8-5V103**	8/5V10.3-F	54	A1	2.25	1.03
10.90	**D8-5V109**	8/5V10.9-F	61	A1	2.25	1.03
11.30	**D8-5V113**	8/5V11.3-F	57	A2	2.25	1.03
11.80	**D8-5V118**	8/5V11.8-F	59	A2	2.25	1.03
12.50	**D8-5V125**	8/5V12.5-F	63	A2	2.25	1.03
13.20	**D8-5V132**	8/5V13.2-F	67	A2	2.25	1.03
14.00	**D8-5V140**	8/5V14.0-F	77	A2	2.25	1.03
15.00	**D8-5V150**	8/5V15.0-F	79	A3	2.25	1.03
16.00	**D8-5V160**	8/5V16.0-F	85	A3	2.25	1.03
18.70	**D8-5V187**	8/5V18.7-J	112	A3	1.56	0.16
21.20	**D8-5V212**	8/5V21.2-J	119	D3	1.19	0.22
23.60	**D8-5V236**	8/5V23.6--J	154	A3	1.56	0.16
28.00	**D8-5V280**	8/5V28.0-J	179	D3	1.19	0.22
31.50	**D8-5V315**	8/5V31.5-M**	295	B3	1.88	0.22
37.50	**D8-5V375**	8/5V37.5-M**	326	C3	1.38	0.28
50.00	**D8-5V500**	8/5V50.0-M**	466	C3	1.44	0.22

6-Groove — **F = 4.44**

O.D.Δ	Part No.	Description	Wt.	Type‡	M	K
# ++4.40	**D6-5V44**	6/5V4.4-SD	8.4	E1	0.00	0.69
# ++4.65	**D6-5V465**	6/5V4.65-SD	9.3	E1	0.00	0.69
++4.90	**D6-5V49**	6/5V4.9-SD	8.9	A1	1.31	0.63
++5.20	**D6-5V52**	6/5V5.2-SD	10.9	A1	1.31	0.63
++5.50	**D6-5V55**	6/5V5.5-SD	13.4	A1	1.31	0.63
++5.90	**D6-5V59**	6/5V5.9-SK	12.8	A1	1.31	0.50
++6.30	**D6-5V63**	6/5V6.3-SK	15.3	A1	1.31	0.50
++6.70	**D6-5V67**	6/5V6.7-SF	16.1	A1	1.63	0.81
7.10	**D6-5V71**	6/5V7.1-SF	18.8	A1	1.38	0.56
7.50	**D6-5V75**	6/5V7.5-SF	20.8	A1	1.38	0.56
8.00	**D6-5V80**	6/5V8.0-E	22.3	A1	1.63	0.56
8.50	**D6-5V85**	6/5V8.5-E	27.1	A1	1.63	0.56
9.00	**D6-5V90**	6/5V9.0-E	30.5	A1	1.63	0.56
9.25	**D6-5V925**	6/5V9.25-E	32.2	A1	1.63	0.56
9.75	**D6-5V975**	6/5V9.75-E	36.2	A1	1.63	0.56
10.30	**D6-5V103**	6/5V10.3-E	34.4	A2	1.63	0.56
10.90	**D6-5V109**	6/5V10.9-E	36.4	A2	1.63	0.56
11.30	**D6-5V113**	6/5V11.3-E	39.3	A2	1.63	0.56
11.80	**D6-5V118**	6/5V11.8-E	40.2	A2	1.63	0.56
12.50	**D6-5V125**	6/5V12.5-F	54.2	A2	1.75	0.53
13.20	**D6-5V132**	6/5V13.2-F	58	A2	1.75	0.53
14.00	**D6-5V140**	6/5V14.0-F	59.9	A2	1.75	0.53
15.00	**D6-5V150**	6/5V15.0-F	60	A3	1.75	0.53
16.00	**D6-5V160**	6/5V16.0-F	64.7	A3	1.75	0.53
18.70	**D6-5V187**	6/5V18.7--F	80.5	A3	1.31	0.09
21.20	**D6-5V212**	6/5V21.2-F	96.3	D3	1.00	0.22
23.60	**D6-5V236**	6/5V23.6--J	133	D3	0.94	0.47
28.00	**D6-5V280**	6/5V28.0-J	179	D3	0.94	0.47
31.50	**D6-5V315**	6/5V31.5--J	198	D3	0.94	0.47
37.50	**D6-5V375**	6/5V37.5-J	239	D3	0.94	0.47
50.00	**D6-5V500**	6/5V50.0-M**	386	C3	0.25	1.41

+ 5VX Belts only on these sizes.

Reverse Mount Only

10-Groove — **F = 7.19**

O.D.Δ	Part No.	Description	Wt.	Type‡	M	K
8.00	**D10-5V80**	10/5V8.0-E	32	A1	2.88	1.81
8.50	**D10-5V85**	10/5V8.5-E	38	A1	2.88	1.81
9.00	**D10-5V90**	10/5V9.0-F	46	A1	2.94	1.72
9.25	**D10-5V925**	10/5V9.25-F	48	A1	2.94	1.72
9.75	**D10-5V975**	10/5V9.75-F	54	A1	2.94	1.72
10.30	**D10-5V103**	10/5V10.3-F	61	A1	2.94	1.72
10.90	**D10-5V109**	10/5V10.9-F	69	A1	2.94	1.72
11.30	**D10-5V113**	10/5V11.3-F	73	A1	2.94	1.72
11.80	**D10-5V118**	10/5V11.8-F	77	A2	2.94	1.72
12.50	**D10-5V125**	10/5V12.5-J	93	A2	3.19	1.78
13.20	**D10-5V132**	10/5V13.2-J	100	A2	3.19	1.78
14.00	**D10-5V140**	10/5V14.0-J	90	A2	3.56	2.16
15.00	**D10-5V150**	10/5V15.0-J	98	A2	3.56	2.16
16.00	**D10-5V160**	10/5V16.0-J	99	A3	3.56	2.16
18.70	**D10-5V187**	10/5V18.7-J	123	A3	3.56	2.16
21.20	**D10-5V212**	10/5V21.2-J	139	A3	2.56	1.16
23.60	**D10-5V236**	10/5V23.6-M**	245	A3	1.88	0.22
28.00	**D10-5V280**	10/5V28.0-M**	256	A3	1.88	0.22
31.50	**D10-5V315**	10/5V31.5-M**	329	A3	1.88	0.22
37.50	**D10-5V375**	10/5V37.5-M**	356	A3	1.88	0.22
50.00	**D10-5V500**	10/5V50.0-M**	556	A3	1.94	0.28

P.D. for "5V" Belts = O.D.

** M-N-P-W are standard mounting only for these parts

‡ Type 1 = Block Type, 2 = Web, 3 = Arm – See page PT7-2

SELECTION/DIMENSIONS

8V QD SHEAVES - Standard Duty

4-Groove — **F = 4.88**

O.D.Δ	Part No.	Description	Wt.	Type‡	M	K
12.5	**D4-8V125**	4/8V12.5--F	56	D2	1.19	0.03
13.2	**D4-8V132**	4/8V13.2--F	63	D2	1.19	0.03
14.0	**D4-8V140**	4/8V14.0--F	65	D2	1.19	0.03
15.0	**D4-8V150**	4/8V15.0--F	72	D2	1.69	0.03
16.0	**D4-8V160**	4-8V16.0-F	80	D3	1.19	0.03
17.0	**D4-8V170**	4/8V17.0--F	93	A3	1.25	0.03
18.0	**D4-8V180**	4/8V18.0-F	105	A3	1.25	0.03
19.0	**D4-8V190**	4/8V19.0--F	113	D3	1.19	0.03
20.0	**D4-8V200**	4/8V20.0--J	125	A3	1.50	0.09
21.2	**D4-8V212**	4/8V21.2--J	131	A3	1.50	0.09
22.4	**D4-8V224**	4/8V22.4--J	150	A3	1.50	0.09
24.8	**D4-8V248**	4/8V24.8–M**	247	C3	0.81	0.84
30.0	**D4-8V300**	4/8V30.0–M**	230	C3	0.81	0.84
35.5	**D4-8V355**	4/8V35.5–M**	329	C3	0.81	0.84
40.0	**D4-8V400**	4/8V40.0–M**	325	C3	0.81	0.84
44.5	**D4-8V445**	4/8V44.5–M**	434	C3	0.81	0.84
53.0	**D4-8V530**	4/8V53.0–M**	425	C3	0.81	0.84

5-Groove — **F = 6.00**

O.D.Δ	Part No.	Description	Wt.	Type‡	M	K
12.5	**D5-8V125**	5/8V12.5-F	64	A2	2.28	1.06
13.2	**D5-8V132**	5/8V13.2-F	75	A2	2.28	1.06
14.0	**D5-8V140**	5/8V14.0-F	77	A2	2.28	1.06
15.0	**D5-8V150**	5/8V15.0-F	87	A2	2.31	1.09
16.0	**D5-8V160**	5/8V16.0-F	93	A3	2.31	1.09
17.0	**D5-8V170**	5/8V17.0-J	105	A3	2.00	0.59
18.0	**D5-8V180**	5/8V18.0--J	117	A3	2.00	0.59
19.0	**D5-8V190**	5/8V19.0-J	126	A3	2.00	0.59
20.0	**D5-8V200**	5/8V20.0-J	135	A3	2.00	0.59
21.2	**D5-8V212**	5/8V21.2-J	160	A3	2.00	0.59
22.4	**D5-8V224**	5/8V22.4–M**	188	B3	1.94	0.28
24.8	**D5-8V248**	5/8V24.8–M**	266	B3	1.97	0.31
30.0	**D5-8V300**	5/8V30.0–M**	255	B3	1.97	0.31
35.5	**D5-8V355**	5/8V35.5–M**	391	B3	1.97	0.31
40.0	**D5-8V400**	5/8V40.0–M**	355	B3	1.97	0.31
44.5	**D5-8V445**	5/8V44.5–N**	538	C3	0.75	1.31
53.0	**D5-8V530**	5/8V53.0–N**	500	C3	0.75	1.31

6-Groove — **F = 7.13**

O.D.Δ	Part No.	Description	Wt.	Type‡	M	K
12.5	**D6-8V125**	6/8V12.5-F	79	A1	3.31	2.09
13.2	**D6-8V132**	6/8V13.2-F	86	A2	2.28	1.06
14.0	**D6-8V140**	6/8V14.0-F	92	A2	2.28	1.06
15.0	**D6-8V150**	6/8V15.0--J	99	A2	2.56	1.16
16.0	**D6-8V160**	6/8V16.0-J	119	A2	2.56	1.16
17.0	**D6-8V170**	6/8V17.0-J	125	A3	2.56	1.16
18.0	**D6-8V180**	6/8V18.0-J	131	A3	2.56	1.16
19.0	**D6-8V190**	6/8V19.0-J	146	A3	2.56	1.16
20.0	**D6-8V200**	6/8V20.0–M**	153	B3	2.94	1.28
21.2	**D6-8V212**	6/8V21.2–M**	170	B2	2.94	1.28
22.4	**D6-8V224**	6/8V22.4–M**	205	B3	2.94	1.28
24.8	**D6-8V248**	6/8V24.8–M**	285	A3	1.94	0.28
30.0	**D6-8V300**	6/8V30.0–M**	291	A3	1.94	0.28
35.5	**D6-8V355**	6/8V35.5–N**	467	C3	1.88	0.19
40.0	**D6-8V400**	6/8V40.0–N**	401	B3	1.13	0.19
44.5	**D6-8V445**	6/8V44.5–N**	573	C3	1.88	0.19
53.0	**D6-8V530**	6/8V53.0–N**	520	C3	1.88	0.19
63.0	**D6-8V630**	6/8V63.0–P**	890	C3	1.63	0.75
71.0	**D6-8V710**	6/8V71.0–P**	1131	C3	1.63	0.75

8-Groove — **F = 9.38**

O.D.Δ	Part No.	Description	Wt.	Type‡	M	K
12.5	**D8-8V125**	8/8V12.5--J	100	A1	3.44	2.03
13.2	**D8-8V132**	8/8V13.2--J	126	A1	3.44	2.03
14.0	**D8-8V140**	8/8V14.0--J	124	A2	3.44	2.03
15.0	**D8-8V150**	8/8V15.0-J	134	A2	3.44	2.03
16.0	**D8-8V160**	8/8V16.0--J	145	A2	3.56	2.16
17.0	**D8-8V170**	8/8V17.0–M**	213	A2	3.94	2.28
18.0	**D8-8V180**	8/8V18.0–M**	213	A2	3.94	2.28
19.0	**D8-8V190**	8/8V19.0–M**	221	A2	3.94	2.28
20.0	**D8-8V200**	8/8V20.0–M**	217	A2	3.94	2.28
21.2	**D8-8V212**	8/8V21.2–M**	239	A2	3.94	2.28
22.4	**D8-8V224**	8/8V22.4–M**	260	A3	3.94	2.28
24.8	**D8-8V248**	8/8V24.8–N**	417	A3	2.25	0.19
30.0	**D8-8V300**	8/8V30.0–N**	352	A3	2.25	0.19
35.5	**D8-8V355**	8/8V35.5–N**	575	A3	2.25	0.19
40.0	**D8-8V400**	8/8V40.0–N**	496	A3	2.25	0.19
44.5	**D8-8V445**	8/8V44.5–P**	783	B3	2.63	0.25
53.0	**D8-8V530**	8/8V53.0–P**	760	B3	2.63	0.25
63.0	**D8-8V630**	8/8V63.0–P**	1116	B3	2.63	0.25
71.0	**D8-8V710**	8/8V71.0–W**	1632	C3	2.63	0

P.D. for "8V" Belts = O.D.

** M-N-P-W are standard mounting only for these parts

‡ Type 1 = Block Type, 2 = Web, 3 = Arm – See page PT7-2

8V QD SHEAVES - Standard Duty

10-Groove						F = 11.63
O.D.Δ	Part No.	Description	Wt.	Type‡	M	K
12.5	**D10-8V125**	10/8V12.5-J	148	A1	3.56	2.16
13.2	**D10-8V132**	10/8V13.2-J	148	A1	3.56	2.16
14.0	**D10-8V140**	10/8V14.0-J	160	A1	3.56	2.16
15.0	**D10-8V150**	10/8V15.0-M**	259	A1	3.94	2.28
16.0	**D10-8V160**	10/8V16.0-M**	296	A1	3.94	2.28
17.0	**D10-8V170**	10/8V17.0-M**	269	A2	3.94	2.28
18.0	**D10-8V180**	10/8V18.0-M**	282	A2	3.94	2.28
19.0	**D10-8V190**	10/8V19.0-M**	300	A2	3.94	2.28
20.0	**D10-8V200**	10/8V20.0-M**	318	A2	3.94	2.28
21.2	**D10-8V212**	10/8V21.2-M**	340	A2	3.94	2.28
22.4	**D10-8V224**	10/8V22.4-N**	410	A3	2.25	0.19
24.8	**D10-8V248**	10/8V24.8-N**	463	A3	2.25	0.19
30.0	**D10-8V300**	10/8V30.0--N**	557	A3	2.25	0.19
35.5	**D10-8V355**	10/8V35.5-P**	706	A3	2.63	0.25
40.0	**D10-8V400**	10/8V40.0-P**	817	A3	2.63	0.25
44.5	**D10-8V445**	10/8V44.5-P**	854	A3	2.63	0.25
53.0	**D10-8V530**	10/8V53.0-P**	1198	A3	2.63	0.25
58.0	**D10-8V580**	10/8V58.0-W**	1300	B3	3.00	0.38
63.0	**D10-8V630**	10/8V63.0-W**	1412	B3	3.00	0.38
71.0	**D10-8V710**	10/8V71.0-W**	1771	B3	3.00	0.38

12-Groove						F = 13.88
O.D.Δ	Part No.	Description	Wt.	Type‡	M	K
12.5	**D12-8V125**	12/8V12.5-M**	197	A1	3.94	2.28
13.2	**D12-8V132**	12/8V13.2-M**	219	A1	3.94	2.28
14.0	**D12-8V140**	12/8V14.0-M**	245	A1	3.94	2.28
15.0	**D12-8V150**	12/8V15.0-M**	280	A1	3.94	2.28
16.0	**D12-8V160**	12/8V16.0-M**	319	A1	3.94	2.28
17.0	**D12-8V170**	12/8V17.0-M**	321	A1	3.94	2.28
18.0	**D12-8V180**	12/8V18.0-M**	337	A1	3.94	2.28
19.0	**D12-8V190**	12/8V19.0-N**	380	A1	2.25	0.19
20.0	**D12-8V200**	12/8V20.0-N**	402	A2	2.25	0.19
21.2	**D12-8V212**	12/8V21.2-N**	420	A2	2.25	0.19
22.4	**D12-8V224**	12/8V22.4-N**	458	A3	2.25	0.19
24.8	**D12-8V248**	12/8V24.8--N**	516	A3	2.25	0.19
30.0	**D12-8V300**	12/8V30.0-P**	671	A3	2.63	0.25
35.5	**D12-8V355**	12/8V35.5-P**	798	A3	2.63	0.25
40.0	**D12-8V400**	12/8V40.0-P**	909	A3	2.63	0.25
44.5	**D12-8V445**	12/8V44.5-P**	982	A3	2.63	0.25
53.0	**D12-8V530**	12/8V53.0-W**	1456	A3	3.25	0.63
58.0	**D12-8V580**	12/8V58.0-W**	1500	A3	3.25	0.63
63.0	**D12-8V630**	12/8V63.0-W**	1540	A3	3.25	0.63
71.0	**D12-8V710**	12/8V71.0-W**	1912	A3	3.25	0.63

P.D. for "8V" Belts = O.D.

** M-N-P-W are standard mounting only for these parts

‡ Type 1 = Block Type, 2 = Web, 3 = Arm – See page PT7-2

SELECTION/DIMENSIONS

A/B QD SHEAVES - Standard Duty

1-Groove — **F = .88 A3.0 thru A6.4 B6.8** — **Balance F = 1**

O.D.Δ	Part No.	Description	Wt.	Type‡	M	K
# 3.75	**D1B34**	1A3.0B3.4-SH	1	E1	0.13	0.63
3.95	**D1B36**	1A3.2B3.6-SH	1	D1	0.13	0.50
4.15	**D1B38**	1A3.4B3.8-SH	2	D1	0.13	0.50
4.35	**D1B40**	1A3.6B4.0-SH	2	D1	0.13	0.50
4.55	**D1B42**	1A3.8B4.2-SH	2	D1	0.13	0.50
4.75	**D1B44**	1A4.0B4.4-SH	2	D1	0.13	0.50
4.95	**D1B46**	1A4.2B4.6-SDS	2	C1	0.25	0.44
5.15	**D1B48**	1A4.4B4.8-SDS	3	C1	0.25	0.44
5.35	**D1B50**	1A4.6B5.0-SDS	3	C1	0.25	0.44
5.55	**D1B52**	1A4.8B5.2-SDS	3	C1	0.25	0.44
5.75	**D1B54**	1A5.0B5.4-SDS	4	C1	0.25	0.44
5.95	**D1B56**	1A5.2B5.6-SDS	4	C1	0.25	0.44
6.15	**D1B58**	1A5.4B5.8-SDS	4	C1	0.25	0.44
6.35	**D1B60**	1A5.6B6.0-SDS	5	C1	0.25	0.44
6.55	**D1B62**	1A5.8B6.2-SDS	5	C1	0.25	0.44
6.75	**D1B64**	1A6.0B6.4-SDS	6	C1	0.25	0.44
6.95	**D1B66**	1A6.2B6.6-SDS	6	C1	0.25	0.44
7.15	**D1B68**	1A6.4B6.8-SDS	6	C1	0.25	0.44
7.35	**D1B70**	1A6.6B7.0-SDS	6	D3	0.13	0.56
7.75	**D1B74**	1A7.0B7.4-SDS	6	D3	0.13	0.56
8.35	**D1B80**	1A7.6B8.0-SDS	7	D3	0.13	0.56
8.95	**D1B86**	1A8.2B8.6-SDS	8	D3	0.13	0.56
9.35	**D1B90**	1A8.6B9.0-SDS	9	D3	0.13	0.56
9.75	**D1B94**	1A9.0B9.4-SDS	9	D3	0.13	0.56
11.35	**D1B110**	1A10.6B11.0-SDS	11	D3	0.13	0.56
12.75	**D1B124**	1A12.0B12.4-SDS	12	D3	0.13	0.56
13.95	**D1B136**	1A13.2B13.6-SDS	13	D3	0.13	0.56
15.75	**D1B154**	1A15.0B15.4-SK	20	C3	0.11	0.69
16.35	**D1B160**	1A15.6B16.0--SK	22	C3	0.09	0.88
18.75	**D1B184**	1A18.0B18.4-SK	28	E3	0.12	0.94
20.35	**D1B200**	1B20.0--SK	30	C3	0.00	0.81
25.35	**D1B250**	1B25.0--SK	40	E3	0.12	0.94

P.D. for "A" (4L) Belts = Daturn Dia. + 0.35" = O.D. - 0.40

P.D. for "B" (5L) Belts = O.D.

‡ Type 1 = Block Type, 2 = Web, 3 = Arm – See page PT7-2

2-Groove — **F = 1.75**

O.D.Δ	Part No.	Description	Wt.	Type‡	M	K
# 3.75	**D2B34**	2A3.0B3.4-SH	2	E1	0.00	0.63
## 3.95	**D2B36**	2A3.2B3.6-SH	3	D1	0.16	0.47
## 4.15	**D2B38**	2A3.4B3.8-SH	3	D1	0.16	0.47
## 4.35	**D2B40**	2A3.6B4.0-SH	3	D1	0.16	0.47
4.55	**D2B42**	2A3.8B4.2-SH	3	A1	0.69	0.06
4.75	**D2B44**	2A4.0B4.4-SH	4	A1	0.69	0.06
4.95	**D2B46**	2A4.2B4.6-SDS	4	D1	0.69	0.00
5.15	**D2B48**	2A4.4B4.8-SDS	4	D1	0.69	0.00
5.35	**D2B50**	2A4.6B5.0-SDS	5	D1	0.69	0.00
5.55	**D2B52**	2A4.8B5.2-SDS	5	D1	0.69	0.00
5.75	**D2B54**	2A5.0B5.4-SDS	6	D1	0.69	0.00
5.95	**D2B56**	2A5.2B5.6-SDS	6	D1	0.69	0.00
6.15	**D2B58**	2A5.4B5.8-SDS	6	D2	0.69	0.00
6.35	**D2B60**	2A5.6B6.0-SDS	6	D2	0.69	0.00
6.55	**D2B62**	2A5.8B6.2-SDS	7	D2	0.69	0.00
6.75	**D2B64**	2A6.0B6.4-SDS	7	D2	0.69	0.00
6.95	**D2B66**	2A6.2B6.6-SDS	8	D2	0.69	0.00
7.15	**D2B68**	2A6.4B6.8-SDS	8	D2	0.69	0.00
7.35	**D2B70**	2A6.6B7.0-SK	9	D2	0.44	0.38
7.75	**D2B74**	2A7.0B7.4-SK	10	D2	0.44	0.38
8.35	**D2B80**	2A7.6B8.0-SK	11	D2	0.44	0.38
8.95	**D2B86**	2A8.2B8.6-SK	12	D3	0.44	0.38
9.35	**D2B90**	2A8.2B8.6-SK	12	D3	0.44	0.38
9.75	**D2B94**	2A9.0B9.4-SK	13	D3	0.44	0.38
11.35	**D2B110**	2A10.6B11.0-SK	15	D3	0.44	0.38
12.75	**D2B124**	2A12.0B12.4-SK	18	D3	0.25	0.56
13.95	**D2B136**	2A13.2B13.6-SK	24	D3	0.44	0.38
15.75	**D2B154**	2A15.0B15.4-SK	25	D3	0.44	0.38
16.35	**D2B160**	2A15.6B16.0-SK	27.4	D3	0.44	0.38
18.75	**D2B184**	2A18.0B18.4-SK	38	D3	0.44	0.38
20.35	**D2B200**	2B20.0--SF	47	D3	0.13	0.69
25.35	**D2B250**	2B25.0-SF	60	D3	0.44	0.38
30.35	**D2B300**	2B30.0--SF	75	D3	0.38	0.44
38.35	**D2B380**	2B38.0--SF	100	D3	0.47	0.34

Reverse Mount Only

This sheave can only be reverse mounted with standard bushing bolts. Special bolts required for conventional mounting.

A/B QD SHEAVES - Standard Duty

3-Groove						F = 2.50
O.D.Δ	Part No.	Description	Wt.	Type‡	M	K
# 3.75	**D3B34**	3A3.0B3.4-SH	3	E1	0.00	0.63
# 3.95	**D3B36**	3A3.2B3.6-SH	4	D1	0.13	0.50
# 4.15	**D3B38**	3A3.4B3.8-SH	4	D1	0.13	0.50
# 4.35	**D3B40**	3A3.6B4.0-SH	4	E1	0.00	0.63
4.55	**D3B42**	3A3.8B4.2-SH	4	A1	1.06	0.44
4.75	**D3B44**	3A4.0B4.4-SH	5	A1	1.06	0.44
4.95	**D3B46**	3A4.2B4.6-SD	5	A1	1.06	0.38
5.15	**D3B48**	3A4.4B4.8-SD	6	A1	1.06	0.38
5.35	**D3B50**	3A4.6B5.0-SD	7	A1	1.06	0.38
5.55	**D3B52**	3A4.8B5.2-SD	7	A1	1.06	0.38
5.75	**D3B54**	3A5.0B5.4-SD	8	A1	1.06	0.38
5.95	**D3B56**	3A5.2B5.6-SD	9	A1	1.06	0.38
6.15	**D3B58**	3A5.4B5.8-SD	9	A2	1.06	0.38
6.35	**D3B60**	3A5.6B6.0-SD	10	A2	1.06	0.38
6.55	**D3B62**	3A5.8B6.2-SD	10	A2	1.06	0.38
6.75	**D3B64**	3A6.0B6.4-SD	10	A2	1.06	0.38
6.95	**D3B66**	3A6.2B6.6-SD	10	A2	1.06	0.38
7.15	**D3B68**	3A6.4B6.8-SD	11	A2	1.06	0.38
7.35	**D3B70**	3A6.6B7.0-SK	12	D2	0.69	0.13
7.75	**D3B74**	3A7.0B7.4-SK	12	D2	0.69	0.13
8.35	**D3B80**	3A7.6B8.0-SK	13	D2	0.69	0.13
8.95	**D3B86**	3A8.2B8.6-SK	14	D3	0.69	0.13
9.35	**D3B90**	3A8.6B9.0-SK	15	D3	0.69	0.13
9.75	**D3B94**	3A9.0B9.4-SK	17	D3	0.69	0.13
11.35	**D3B110**	3A10.6B11.0-SK	21	D3	0.69	0.13
12.75	**D3B124**	3A12.0B12.4-SK	25	D3	0.69	0.13
13.95	**D3B136**	3A13.2B13.6-SK	28	D3	0.69	0.13
15.75	**D3B154**	3A15.0B15.4-SK	30	D3	0.69	0.13
16.35	**D3B160**	3A15.6B16.0-SK	32	D3	0.69	0.13
18.75	**D3B184**	3A18.0B18.4-SK	41	D3	0.69	0.13
20.35	**D3B200**	3B20.0-SF	55.6	D3	0.63	0.19
25.35	**D3B250**	3B25.0--SF	76.1	D3	0.63	0.19
30.35	**D3B300**	3B30.0--SF	96	D3	0.63	0.19
38.35	**D3B380**	3B38.0-E	145	D3	0.69	0.38

4-Groove						F = 3.25
O.D.Δ	Part No.	Description	Wt.	Type‡	M	K
# 3.75	**D4B34**	4A3.0B3.4-SD	4	E1	0.00	1.00
# 3.95	**D4B36**	4A3.2B3.6-SD	5	E1	0.00	1.00
# 4.15	**D4B38**	4A3.4B3.8-SD	6	E1	0.00	1.00
# 4.35	**D4B40**	4A3.6B4.0-SD	5	E1	0.00	0.69
# 4.55	**D4B42**	4A3.8B4.2-SD	6	E1	0.00	0.69
4.75	**D4B44**	4A4.0B4.4-SD	6	E1	0.00	0.69
4.95	**D4B46**	4A4.2B4.6-SD	7	A1	1.31	0.63
5.15	**D4B48**	4A4.4B4.8-SD	8	A1	1.31	0.63
5.35	**D4B50**	4A4.6B5.0-SD	8	A1	1.31	0.63
5.55	**D4B52**	4A4.8B5.2-SD	9	A1	1.31	0.63
5.75	**D4B54**	4A5.0B5.4-SD	10	A1	1.31	0.63
5.95	**D4B56**	4A5.2B5.6-SD	10	A1	1.31	0.63
6.15	**D4B58**	4A5.4B5.8-SD	11	A2	1.31	0.63
6.35	**D4B60**	4A5.6B6.0-SD	11	A2	1.31	0.63
6.55	**D4B62**	4A5.8B6.2-SD	12	A2	1.31	0.63
6.75	**D4B64**	4A6.0B6.4-SD	11	A2	1.31	0.63
6.95	**D4B66**	4A6.2B6.6-SD	11	A2	1.31	0.63
7.15	**D4B68**	4A6.4B6.8-SD	12	A2	1.31	0.63
7.35	**D4B70**	4A6.6B7.0-SK	13	A2	1.00	0.19
7.75	**D4B74**	4A7.0B7.4-SK	15	A2	1.00	0.19
8.35	**D4B80**	4A7.6B8.0-SK	15	A2	1.00	0.19
8.95	**D4B86**	4A8.2B8.6-SK	17	A3	1.00	0.19
9.35	**D4B90**	4A8.6B9.0-SK	17	A3	1.00	0.19
9.75	**D4B94**	4A9.0B9.4-SK	19	A3	1.00	0.19
11.35	**D4B110**	4A10.6B11.0-SK	25	A3	1.00	0.19
12.75	**D4B124**	4A12.0B12.4-SK	28	A3	1.00	0.19
13.95	**D4B136**	4A13.2B13.6-SK	32	A3	1.00	0.19
15.75	**D4B154**	4A15.0B15.4-SF	38	A3	1.00	0.19
16.35	**D4B160**	4A15.6B16.0-SF	41	A3	1.00	0.19
18.75	**D4B184**	4A18.0B18.4-SF	48	A3	1.00	0.19
20.35	**D4B200**	4B20.0-SF	60	A3	1.00	0.19
25.35	**D4B250**	4B25.0-E	93	D3	1.00	0.06
30.35	**D4B300**	4B30.0--E	120	D3	1.00	0.06
38.35	**D4B380**	4B38.0--E	162	D3	1.00	0.00

P.D. for "A" (4L) Belts = Daturn Dia. + 0.35" = O.D. - 0.40

P.D. for "B" (5L) Belts = O.D.

Reverse Mount Only

‡ Type 1 = Block Type, 2 = Web, 3 = Arm – See page PT7-2

SELECTION/DIMENSIONS

A/B QD SHEAVES - Standard Duty

5-Groove — **F = 4.00**

O.D.Δ	Part No.	Description	Wt.	Type‡	M	K
# 3.75	**D5B34**	5A3.0B3.4-SD	5	E1	0.00	1.00
# 3.95	**D5B36**	5A3.2B3.6-SD	6	E1	0.00	1.00
# 4.15	**D5B38**	5A3.4B3.8-SD	6	E1	0.00	1.00
# 4.35	**D5B40**	5A3.6B4.0-SD	6	E1	0.00	0.69
# 4.55	**D5B42**	5A3.8B4.2-SD	7	E1	0.00	0.69
# 4.75	**D5B44**	5A4.0B4.4-SD	7	E1	0.00	0.69
4.95	**D5B46**	5A4.2B4.6-SD	7	A1	1.31	0.63
5.15	**D5B48**	5A4.4B4.8-SD	9	A1	1.31	0.63
5.35	**D5B50**	5A4.6B5.0-SD	10	A1	1.31	0.63
5.55	**D5B52**	5A4.8B5.2-SD	10	A1	1.31	0.63
5.75	**D5B54**	5A5.0B5.4-SK	10	A1	1.31	0.50
5.95	**D5B56**	5A5.2B5.6-SK	11	A1	1.31	0.50
6.15	**D5B58**	5A5.4B5.8-SK	12	A1	1.31	0.50
6.35	**D5B60**	5A5.6B6.0-SK	12	A1	1.31	0.50
6.55	**D5B62**	5A5.8B6.2-SK	14	A1	1.31	0.50
6.75	**D5B64**	5A6.0B6.4-SK	14	A1	1.31	0.50
6.95	**D5B66**	5A6.2B6.6-SK	15	A1	1.31	0.50
7.15	**D5B68**	5A6.4B6.8-SK	16	A1	1.31	0.50
7.35	**D5B70**	5A6.6B7.0-SF	16	A1	1.31	0.50
7.75	**D5B74**	5A7.0B7.4-SF	18	A1	1.31	0.50
8.35	**D5B80**	5A7.6B8.0-SF	19	A2	1.31	0.50
8.95	**D5B86**	5A8.2B8.6-SF	21	A2	1.31	0.50
9.35	**D5B90**	5A8.6B9.0-SF	21	A3	1.31	0.50
9.75	**D5B94**	5A9.0B9.4-SF	22	A3	1.31	0.50
11.35	**D5B110**	5A10.6B11.0-SF	29	A3	1.31	0.50
12.75	**D5B124**	5A12.0B12.4-SF	33	A3	1.31	0.50
13.95	**D5B136**	5A13.2B13.6-SF	39	A3	1.31	0.50
15.75	**D5B154**	5A15.0B15.4-SF	43	A3	1.31	0.50
16.35	**D5B160**	5A15.6B16.0-SF	46	A3	1.31	0.50
18.75	**D5B184**	5A18.0B18.4-SF	54	A3	1.31	0.50
20.35	**D5B200**	5B20.0-E	77.5	A3	1.25	0.19
25.35	**D5B250**	5B25.0-E	108	A3	1.25	0.19
30.35	**D5B300**	5B30.0-E	131	A3	1.25	0.19
38.35	**D5B380**	5B38.0-E	169	A3	1.25	0.19

P.D. for "A" (4L) Belts = Daturn Dia. + 0.35" = O.D. - 0.40
P.D. for "B" (5L) Belts = O.D.
Reverse Mount Only
‡ Type 1 = Block Type, 2 = Web, 3 = Arm – See page PT7-2

6-Groove — **F = 4.75**

O.D.Δ	Part No.	Description	Wt.	Type‡	M	K
# 3.75	**D6B34**	6A3.0B3.4-SD	6	E1	0.00	1.09
# 3.95	**D6B36**	6A3.2B3.6-SD	7	E1	0.00	1.09
# 4.15	**D6B38**	6A3.4B3.8-SD	7	E1	0.00	1.09
# 4.35	**D6B40**	6A3.6B4.0-SD	7	E1	0.00	0.69
# 4.55	**D6B42**	6A3.8B4.2-SD	8	E1	0.00	0.69
# 4.75	**D6B44**	6A4.0B4.4-SD	9	E1	0.00	0.69
4.95	**D6B46**	6A4.2B4.6-SD	9	A1	1.31	0.63
5.15	**D6B48**	6A4.4B4.8-SD	10	A1	1.31	0.63
5.35	**D6B50**	6A4.6B5.0-SD	11	A1	1.31	0.63
5.55	**D6B52**	6A4.8B5.2-SD	11	A1	1.31	0.63
5.75	**D6B54**	6A5.0B5.4-SK	11	A1	1.31	0.50
5.95	**D6B56**	6A5.2B5.6-SK	13.4	A1	1.31	0.50
6.15	**D6B58**	6A5.4B5.8-SK	15.5	A1	1.31	0.50
6.35	**D6B60**	6A5.6B6.0-SK	15	A1	1.31	0.50
6.55	**D6B62**	6A5.8B6.2-SK	15	A1	1.31	0.50
6.75	**D6B64**	6A6.0B6.4-SK	16	A1	1.31	0.50
6.95	**D6B66**	6A6.2B6.6-SK	17	A1	1.31	0.50
7.15	**D6B68**	6A6.4B6.8-SK	18	A1	1.31	0.50
7.35	**D6B70**	6A6.6B7.0-SF	19	A1	1.69	0.88
7.75	**D6B74**	6A7.0B7.4-SF	20	A1	1.69	0.88
8.35	**D6B80**	6A7.6B8.0-SF	24	A2	1.69	0.88
8.95	**D6B86**	6A8.2B8.6-SF	26	A2	1.69	0.88
9.75	**D6B94**	6A9.0B9.4-SF	30	A2	1.69	0.88
11.35	**D6B110**	6A10.6B11.0-SF	30	A3	1.69	0.88
12.75	**D6B124**	6A12.0B12.4-SF	37	A3	1.67	0.88
13.95	**D6B136**	6A13.2B13.6-SF	39	A3	1.91	1.09
15.75	**D6B154**	6A15.0B15.4--SF	51.4	A3	1.91	1.09
16.35	**D6B160**	6A15.6B16.0--SF	54.6	A3	1.69	0.88
18.75	**D6B184**	6A18.0B18.4--SF	59	A3	1.91	1.09
20.35	**D6B200**	6B20.0-E	96.9	A3	1.25	0.19
25.35	**D6B250**	6B25.0-E	120	A3	1.38	0.31
30.35	**D6B300**	6B30.0--E	151	A3	1.38	0.31
38.35	**D6B380**	6B38.0--E	157	A3	1.38	0.31

A/B QD SHEAVES - Standard Duty

8-Groove						F = 6.25
O.D.Δ	Part No.	Description	Wt.	Type‡	M	K
5.75	**D8B54**	8B5.4-SK	15	A1	1.81	1.00
5.95	**D8B56**	8B5.6-SK	17	A1	1.81	1.00
6.15	**D8B58**	8B5.8-SK	16	A1	1.81	1.00
6.35	**D8B60**	8B6.0-SF	16	A1	1.81	1.00
6.55	**D8B62**	8B6.2-SF	18	A1	1.81	1.00
6.75	**D8B64**	8B6.4-SF	19	A1	1.81	1.00
6.95	**D8B66**	8B6.6-SF	20	A1	1.81	1.00
7.15	**D8B68**	8B6.8-SF	21	A1	1.81	1.00
7.35	**D8B70**	8B7.0-SF	22	A1	1.81	1.00
7.75	**D8B74**	8B7.4-SF	25	A1	1.81	1.00
8.35	**D8B80**	8B8.0-E	29	A1	2.38	1.31
8.95	**D8B86**	8B8.6-E	33	A1	2.38	1.31
9.75	**D8B94**	8B9.4-E	36	A1	2.38	1.31
11.35	**D8B110**	8B11.0-E	46	A1	2.38	1.31
12.75	**D8B124**	8B12.4-E	53	A2	2.38	1.31
13.95	**D8B136**	8B13.6-E	59	A3	2.44	1.38
15.75	**D8B154**	8B15.4-E	69	A3	2.44	1.38
16.35	**D8B160**	8B16.0-E	71	A3	#N/A!	1.31
18.75	**D8B184**	8B18.4--F	108	A3	1.31	0.09
20.35	**D8B200**	8B20.0--F	114	A3	1.31	0.09
25.35	**D8B250**	8B25.0- F	152	A3	1.31	0.09
30.35	**D8B300**	8B30.0--F	186	A3	1.31	0.09
38.35	**D8B380**	8B38.0-F	220	A3	1.31	0.09

10-Groove						F = 7.75
O.D.Δ	Part No.	Description	Wt.	Type‡	M	K
5.75	**D10B54**	10B5.4-SK	16	A1	2.56	1.75
5.95	**D10B56**	10B5.6-SK	17	A1	2.56	1.75
6.15	**D10B58**	10B5.8-SK	18	A1	2.56	1.75
6.35	**D10B60**	10B6.0-SF	19	A1	2.56	1.75
6.55	**D10B62**	10B6.2-SF	20	A1	2.56	1.75
6.75	**D10B64**	10B6.4-SF	21	A1	2.56	1.75
6.95	**D10B66**	10B6.6-SF	21	A1	2.56	1.75
7.15	**D10B68**	10B6.8-SF	22	A1	2.56	1.75
7.35	**D10B70**	10B7.0-SF	23	A1	2.56	1.75
7.75	**D10B74**	10B7.4-SF	24	A1	2.56	1.75
-	**-**	-	-	-	-	-
8.95	**D10B86**	10B8.6-E	39.6	A1	3.13	2.06
9.75	**D10B94**	10B9.4-E	40	A1	3.13	2.06
11.35	**D10B110**	10B11.0-E	52	A1	3.13	2.06
12.75	**D10B124**	10B12.4-E	58	A2	3.13	2.06
13.95	**D10B136**	10B13.6-F	73	A3	2.06	0.84
15.75	**D10B154**	10B15.4-F	87	A3	2.06	0.84
16.35	**D10B160**	10B16.0-F	100	A3	2.06	0.84
18.75	**D10B184**	10B18.4--F	110	A3	2.06	0.84
20.35	**D10B200**	10B20.0--F	120	A3	2.06	0.84
25.35	**D10B250**	10B25.0--F	148	A3	2.06	0.84
30.35	**D10B300**	10B30.0--F	190	A3	2.06	0.84
38.35	**D10B380**	10B38.0-J	260	A3	1.63	0.22

P.D. for "A" (4L) Belts = Daturn Dia. + 0.35" = O.D. - 0.40

P.D. for "B" (5L) Belts = O.D.

Reverse Mount Only

‡ Type 1 = Block Type, 2 = Web, 3 = Arm – See page PT7-2

SELECTION/DIMENSIONS

C QD SHEAVES - Standard Duty

1-Groove — F = 1.38

O.D.Δ	Part No.	Description	Wt.	Type‡	M	K
7.4	**D1C70**	1C7.0-SF	10	C1	0.25	0.56
7.9	**D1C75**	1C7.5-SF	11	C1	0.25	0.56
8.4	**D1C80**	1C8.0-SF	13.2	C1	0.25	0.56
8.9	**D1C85**	1C8.5-SF	15.6	C1	0.25	0.56
9.4	**D1C90**	1C9.0-SF	13	C2	0.22	0.59
9.9	**D1C95**	1C9.5-SF	18	C2	0.22	0.59
10.4	**D1C100**	1C10.0-SF	14	D2	0.13	0.69
10.9	**D1C105**	1C10.5-SF	20	D2	0.13	0.69
11.4	**D1C110**	1C11.0-SF	15	C2	0.13	0.53
12.4	**D1C120**	1C12.0-SF	16	D2	0.13	0.69
13.4	**D1C130**	1C13.0-SF	18	D3	0.13	0.69
14.4	**D1C140**	1C14.0-SF	20	D3	0.13	0.69
16.4	**D1C160**	1C16.0-SF	24	D3	0.13	0.69
18.4	**D1C180**	1C18.0-SF	32	D3	0.13	0.69
20.4	**D1C200**	1C20.0--SF	35	D3	0.13	0.69
24.4	**D1C240**	1C24.0--SF	46.9	D3	0.13	0.69

2-Groove — F = 2.38

O.D.Δ	Part No.	Description	Wt.	Type‡	M	K
7.4	**D2C70**	2C7.0-SF	13	A1	0.81	0.00
7.9	**D2C75**	2C7.5-SF	15	A1	0.81	0.00
8.4	**D2C80**	2C8.0-SF	17	A1	0.81	0.00
8.9	**D2C85**	2C8.5-SF	19	A1	0.81	0.00
9.4	**D2C90**	2C9.0-SF	21	A2	0.81	0.00
9.9	**D2C95**	2C9.5-SF	22	A2	0.81	0.00
10.4	**D2C100**	2C10.0-SF	21.8	A2	0.81	0.00
10.9	**D2C105**	2C10.5-SF	23	A2	0.81	0.00
11.4	**D2C110**	2C11.0-SF	26	A2	0.81	0.00
12.4	**D2C120**	2C12.0-SF	37	D2	0.56	0.25
13.4	**D2C130**	2C13.0-SF	35	D3	0.56	0.25
14.4	**D2C140**	2C14.0-SF	40	D3	0.56	0.25
16.4	**D2C160**	2C16.0-SF	40	D3	0.56	0.25
18.4	**D2C180**	2C18.0-SF	50	D3	0.56	0.25
20.4	**D2C200**	2C20.0--SF	55	D3	0.56	0.25
24.4	**D2C240**	2C24.0--SF	73.1	D3	0.56	0.25
27.4	**D2C270**	2C27.0--F	94	C3	#N/A!	0.91
30.4	**D2C300**	2C30.0--F	104	C3	#N/A!	0.91

3-Groove — F = 3.38

O.D.Δ	Part No.	Description	Wt.	Type‡	M	K
+ 5.4	**D3C50**	3C5.0-SD	9	A1	1.00	0.31
# + 5.4	**D3C50SK**	3C5.0-SK	10.5	E1	#N/A!	0.83
+ 6.0	**D3C56**	3C5.6-SF	10	A1	0.00	0.63
+ 6.4	**D3C60**	3C6.0-SF	11.3	A1	0.75	0.06
7.4	**D3C70**	3C7.0-SF	16	A1	1.31	0.50
7.9	**D3C75**	3C7.5-SF	18	A1	1.31	0.50
8.4	**D3C80**	3C8.0-E	21	A1	1.75	0.69
8.9	**D3C85**	3C8.5-E	24	A1	1.75	0.69
9.4	**D3C90**	3C9.0-E	26	A1	1.75	0.69
9.9	**D3C95**	3C9.5-E	29.8	A2	1.75	0.69
10.4	**D3C100**	3C10.0-E	34	A2	1.75	0.69
10.9	**D3C105**	3C10.5-E	37	A2	1.75	0.69
11.4	**D3C110**	3C11.0-E	39	A2	1.75	0.69
12.4	**D3C120**	3C12.0-E	43.4	A2	1.75	0.69
13.4	**D3C130**	3C13.0-E	45	A3	1.75	0.69
14.4	**D3C140**	3C14.0-E	50	A3	1.75	0.69
16.4	**D3C160**	3C16.0-E	60	A3	1.75	0.69
18.4	**D3C180**	3C18.0-E	63	A3	1.75	0.69
20.4	**D3C200**	3C20.0--E	81	D3	1.00	0.06
24.4	**D3C240**	3C24.0-E	94.7	D3	1.00	0.06
27.4	**D3C270**	3C27.0--F	116	D3	0.81	0.41
30.4	**D3C300**	3C30.0--F	134.4	D3	0.81	0.41
36.4	**D3C360**	3C36.0--F	159	D3	0.81	0.41
44.4	**D3C440**	3C44.0-F	190	D3	0.81	0.41
50.4	**D3C500**	3C50.0--F	250	D3	0.81	0.41

4-Groove — F = 4.38

O.D.Δ	Part No.	Description	Wt.	Type‡	M	K
+ 5.4	**D4C50**	4C5.0-SD	10.2	A1	1.31	0.63
# + 5.4	**D4C50SK**	4C5.0-SK	12.0	E1	#N/A!	0.81
+ 6.0	**D4C56**	4C5.6-SF	13.0	A1	0.00	0.88
+ 6.4	**D4C60**	4C6.0-SF	15.0	A1	0.88	0.06
7.4	**D4C70**	4C7.0-SF	19.0	A1	1.56	0.75
7.9	**D4C75**	4C7.5-SF	22.0	A1	1.56	0.75
8.4	**D4C80**	4C8.0-E	24.0	A1	2.00	0.94
8.9	**D4C85**	4C8.5-E	28.0	A1	2.00	0.94
9.4	**D4C90**	4C9.0-E	31.0	A1	2.00	0.94
9.9	**D4C95**	4C9.5-E	34.8	A1	2.00	0.94
10.4	**D4C100**	4C10.0-E	40.0	A1	2.00	0.94
10.9	**D4C105**	4C10.5-E	43.0	A2	2.00	0.94
11.4	**D4C110**	4C11.0-E	44.0	A2	2.00	0.94
12.4	**D4C120**	4C12.0-E	50.0	A2	2.00	0.94
13.4	**D4C130**	4C13.0-E	52.0	A3	2.00	0.94
14.4	**D4C140**	4C14.0-E	57.0	A3	2.00	0.94
16.4	**D4C160**	4C16.0--E	67.0	A3	2.00	0.94
18.4	**D4C180**	4C18.0-E	72.0	A3	2.00	0.94
20.4	**D4C200**	4C20.0--E	86.0	A3	1.50	0.44
24.4	**D4C240**	4C24.0-F	113.0	A3	1.31	0.09
27.4	**D4C270**	4C27.0--F	140.0	A3	1.31	0.09
30.4	**D4C300**	4C30.0--F	149.0	A3	1.31	0.09
36.4	**D4C360**	4C36.0--F	185.0	A3	1.38	0.16
44.4	**D4C440**	4C44.0-J	225.0	B3	1.63	0.22
50.4	**D4C500**	4C50.0-J	275.0	B3	1.63	0.22

P.D. for "C" Belts = O.D.
Reverse Mount Only
‡ Type 1 = Block Type, 2 = Web, 3 = Arm – See page PT7-2
+ Recommended CX Belt only

C QD SHEAVES - Standard Duty

5-Groove F = 5.38

O.D.Δ	Part No.	Description	Wt.	Type‡	M	K
+ 6.4	**D5C60**	5C6.0-SF	16	A1	0.88	0.06
7.4	**D5C70**	5C7.0-SF	23	A1	1.94	1.13
7.9	**D5C75**	5C7.5-SF	25	A1	1.94	1.13
8.4	**D5C80**	5C8.0-E	28	A1	2.38	1.31
8.9	**D5C85**	5C8.5-E	32	A1	2.38	1.31
9.4	**D5C90**	5C9.0-E	36	A1	2.38	1.31
9.9	**D5C95**	5C9.5-E	40	A1	2.38	1.31
10.4	**D5C100**	5C10.0-E	41	A2	2.38	1.31
10.9	**D5C105**	5C10.5-E	44	A2	2.38	1.31
11.4	**D5C110**	5C11.0-E	47	A2	2.38	1.31
12.4	**D5C120**	5C12.0-E	55	A2	2.38	1.31
13.4	**D5C130**	5C13.0-E	55	A3	2.38	1.31
14.4	**D5C140**	5C14.0-E	62	A3	2.38	1.31
16.4	**D5C160**	5C16.0--E	73	A3	2.38	1.31
18.4	**D5C180**	5C18.0-E	83	A3	2.38	1.31
20.4	**D5C200**	5C20.0-F	109	A3	2.38	0.09
24.4	**D5C240**	5C24.0-F	129	A3	1.31	0.09
27.4	**D5C270**	5C27.0--F	149	A3	1.31	0.09
30.4	**D5C300**	5C30.0--F	172	A3	1.31	0.09
36.4	**D5C360**	5C36.0-J	205	A3	1.63	0.22
44.4	**D5C440**	5C44.0-J	285	A3	1.63	0.22
50.4	**D5C500**	5C50.0-J	325	A3	1.63	0.22

6-Groove F = 6.38

O.D.Δ	Part No.	Description	Wt.	Type‡	M	K
+ 6.4	**D6C60**	6C6.0-SF	24	A1	1.88	1.06
7.4	**D6C70**	6C7.0-SF	26	A1	1.94	1.13
7.9	**D6C75**	6C7.5-SF	29	A1	1.94	1.13
8.4	**D6C80**	6C8.0-E	31	A1	2.38	1.31
8.9	**D6C85**	6C8.5-E	35	A1	2.38	1.31
9.4	**D6C90**	6C9.0-F	44	A1	2.44	1.22
9.9	**D6C95**	6C9.5-F	49	A1	2.44	1.22
10.4	**D6C100**	6C10.0-F	56	A1	2.44	1.22
10.9	**D6C105**	6C10.5-F	56	A1	2.44	1.22
11.4	**D6C110**	6C11.0-F	59	A2	2.44	1.22
12.4	**D6C120**	6C12.0-F	66	A2	2.44	1.22
13.4	**D6C130**	6C13.0-F	66	A3	2.44	1.22
14.4	**D6C140**	6C14.0-F	75	A3	2.44	1.22
16.4	**D6C160**	6C16.0--F	86	A3	2.44	1.22
18.4	**D6C180**	6C18.0--F	100	A3	2.44	1.22
20.4	**D6C200**	6C20.0--F	119	A3	1.94	0.72
24.4	**D6C240**	6C24.0--F	141	A3	1.94	0.72
27.4	**D6C270**	6C27.0--J	173	A3	#N/A!	0.16
30.4	**D6C300**	6C30.0--J	189	A3	1.56	0.16
36.4	**D6C360**	6C36.0-J	240	A3	1.63	0.22
44.4	**D6C440**	6C44.0-J	290	A3	1.63	0.22
50.4	**D6C500**	6C50.0-M**	430	B3	2.00	0.34

8-Groove F = 8.38

O.D.Δ	Part No.	Description	Wt.	Type‡	M	K
7.4	**D8C70**	8C7.0-SF	34	A1	3.22	2.41
8.4	**D8C80**	8C8.0-E	38.7	A1	3.25	2.19
8.9	**D8C85**	8C8.5-E	44	A1	3.25	2.19
9.4	**D8C90**	8C9.0-F	52.7	A1	3.31	2.09
9.9	**D8C95**	8C9.5-F	56	A1	3.31	2.09
10.4	**D8C100**	8C10.0-F	62	A1	3.31	2.09
10.9	**D8C105**	8C10.5-F	72	A1	3.31	2.09
11.4	**D8C110**	8C11.0-F	80	A1	3.31	2.09
12.4	**D8C120**	8C12.0-F	94	A1	3.31	2.09
13.4	**D8C130**	8C13.0-F	97	A2	3.31	2.09
14.4	**D8C140**	8C14.0-F	96	A3	3.31	2.09
16.4	**D8C160**	8C16.00-F	111	A3	3.94	2.09
18.4	**D8C180**	8C18.0--F	129	A3	3.94	2.09
20.4	**D8C200**	8C20.0-J	158	A3	1.56	0.16
24.4	**D8C240**	8C24.0--J	173	A3	1.56	0.16
30.4	**D8C300**	8C30.0--J	272	A3	1.56	0.16
36.4	**D8C360**	8C36.0--M**	370	A3	1.94	0.28
44.4	**D8C440**	8C44.0-M**	479	A3	1.94	0.28
50.4	**D8C500**	8C50.0--M**	570	A3	1.94	0.28

10-Groove F = 10.38

O.D.Δ	Part No.	Description	Wt.	Type‡	M	K
8.9	**D10C85**	10C8.5--E	52	A1	3.25	2.19
9.4	**D10C90**	10C9.0--J	54	A1	3.56	2.16
9.9	**D10C95**	10C9.5-J	67.4	A1	3.56	2.16
10.4	**D10C100**	10C10.0--J	77	A1	3.56	2.16
10.9	**D10C105**	10C10.5--J	85.7	A1	3.56	2.16
11.4	**D10C110**	10C11.0--J	93.5	A1	3.56	2.16
12.4	**D10C120**	10C12.0--J	111.8	A1	3.56	2.16
13.4	**D10C130**	10C13.0-J	105	A2	#N/A!	2.16
14.4	**D10C140**	10C14.0-J	114	A2	3.56	2.16
16.4	**D10C160**	10C16.0--J	140	A3	3.56	2.16
18.4	**D10C180**	10C18.0--J	160	A3	3.56	2.16
20.4	**D10C200**	10C20.0--J	165	A3	3.56	2.16
24.4	**D10C240**	10C24.0-M**	225	A3	1.94	0.28
30.4	**D10C300**	10C30.0-M**	275	A3	1.94	0.28
36.4	**D10C360**	10C36.0-M**	340	A3	1.94	0.28
44.40	**D10C440**	10C44.0--M**	460	A3	1.94	0.28
50.40	**D10C500**	10C50.0-M**	550	A3	1.94	0.28

12-Groove F = 12.38

O.D.Δ	Part No.	Description	Wt.	Type‡	M	K
9.4	**D12C90**	12C9.0--J	68	A1	4.06	2.66
9.9	**D12C95**	12C9.5--J	75	A1	4.06	2.66
10.4	**D12C100**	12C10.0--J	86	A1	4.06	2.66
10.9	**D12C105**	12C10.5--J	96	A1	4.06	2.66
11.4	**D12C110**	12C11.0--J	104	A1	4.06	2.66
12.4	**D12C120**	12C12.0--J	118.7	A1	4.06	2.66
13.4	**D12C130**	12C13.0--J	138	A2	4.06	2.66
14.4	**D12C140**	12C14.0--J	153	A2	4.06	2.66
16.4	**D12C160**	12C16.0--J	175	A3	4.06	2.66
18.4	**D12C180**	12C18.0--J	198	A3	4.06	2.66
20.4	**D12C200**	12C20.0--M**	237	A3	1.94	0.28
24.4	**D12C240**	12C24.0--M**	277	A3	1.94	0.28
30.4	**D12C300**	12C30.0--M**	357	A3	1.94	0.28
36.4	**D12C360**	12C36.0-M**	430	A3	1.94	0.28
44.4	**D12C440**	12C44.0-M**	520	A3	1.94	0.28
50.4	**D12C500**	12C50.0-M**	595	A3	1.94	0.28

P.D. for "C" Belts = O.D.

‡ Type 1 = Block Type, 2 = Web, 3 = Arm – See page PT7-2

+ Recommended CX Belt only

** M-N-P-W are standard mounting only for these parts

SELECTION/DIMENSIONS

D QD SHEAVES - Standard Duty

3-Groove — **F = 4.62**

O.D.Δ	Part No.	Description	Wt.	Type‡	M	K
12.6	**D3D120**	3D12.0-F	64	A2	1.50	0.28
13.6	**D3D130**	3D13.0-F	72	A2	1.50	0.28
14.1	**D3D135**	3D13.5--F	76	A2	1.50	0.28
14.6	**D3D140**	3D14.0--F	79	A2	1.50	0.28
15.1	**D3D145**	3D14.5-F	84	A2	1.50	0.28
15.6	**D3D150**	3D15.0-F	89	A2	1.50	0.28
16.1	**D3D155**	3D15.5-F	94	A2	1.50	0.28
16.6	**D3D160**	3D16.0--F	95	A3	1.50	0.28
18.6	**D3D180**	3D18.0--J	115	D3	1.19	0.22
22.6	**D3D220**	3D22.0--J	135	D3	1.19	0.22
27.6	**D3D270**	3D27.0--J	170	D3	1.19	0.22
33.6	**D3D330**	3D33.0--J	215	D3	1.19	0.22
40.6	**D3D400**	3D40.0--J	275	D3	1.19	0.22

4-Groove — **F = 6.06**

O.D.Δ	Part No.	Description	Wt.	Type‡	M	K
12.6	**D4D120**	4D12.0--F	77	A2	2.31	1.09
13.6	**D4D130**	4D13.0--F	85	A2	2.31	1.09
14.1	**D4D135**	4D13.5-F	90	A2	2.31	1.09
14.6	**D4D140**	4D14.0--F	95	A2	2.31	1.09
15.1	**D4D145**	4D14.5-F	100	A2	2.31	1.09
15.6	**D4D150**	4D15.0--F	107	A2	2.31	1.09
16.1	**D4D155**	4D15.5--F	112	A2	2.31	1.09
16.6	**D4D160**	4D16.0-F	110	A3	2.31	1.09
17.6	**D4D170**	4D17.0-J	127	A3	2.56	1.16
18.6	**D4D180**	4D18.0-J	131	A3	2.56	1.16
20.6	**D4D200**	4D20.0-J	145	A3	2.56	1.16
22.6	**D4D220**	4D22.0--J	160	A3	1.56	0.16
27.6	**D4D270**	4D27.0--J	200	A3	1.56	0.16
33.6	**D4D330**	4D33.0-M**	285	B3	1.94	0.28
40.6	**D4D400**	4D40.0-M**	375	B3	1.94	0.28

5-Groove — **F = 7.50**

O.D.Δ	Part No.	Description	Wt.	Type‡	M	K
12.6	**D5D120**	5D12.0-F	89	A2	3.06	1.84
13.6	**D5D130**	5D13.0-F	100	A2	3.06	1.84
14.1	**D5D135**	5D13.5--F	105	A2	3.06	1.84
14.6	**D5D140**	5D14.0-F	111	A2	3.06	1.84
15.1	**D5D145**	5D14.5-F	118	A2	3.06	1.84
15.6	**D5D150**	5D15.0-F	125	A2	3.06	1.84
16.1	**D5D155**	5D15.5-F	131	A2	3.06	1.84
16.6	**D5D160**	5D16.0-F	110	A3	3.06	1.84
17.6	**D5D170**	5D17.0-J	148	A3	1.56	1.91
18.6	**D5D180**	5D18.0-J	131	A3	1.56	1.91
20.6	**D5D200**	5D20.0-J	148	A3	1.56	0.16
22.6	**D5D220**	5D22.0-J	152	A3	0.16	0.16
27.6	**D5D270**	5D27.0-M**	250	A3	1.94	0.28
33.6	**D5D330**	5D33.0-M**	321	A3	1.94	0.28
40.6	**D5D400**	5D40.0--M**	424	A3	1.94	0.28
48.6	**D5D480**	5D48.0-M**	550	A3	1.94	0.28
58.6	**D5D580**	5D58.0--M**	600	A3	1.94	0.28

6-Groove — **F = 8.94**

O.D.Δ	Part No.	Description	Wt.	Type‡	M	K
12.6	**D6D120**	6D12.0-J	116	A1	3.31	1.91
13.6	**D6D130**	6D13.0-J	137	A1	3.31	1.91
14.1	**D6D135**	6D13.5-J	147	A1	3.31	1.91
14.6	**D6D140**	6D14.0--J	158	A1	3.31	1.91
15.1	**D6D145**	6D14.5-J	170	A1	3.31	1.91
15.6	**D6D150**	6D15.0-J	147	A2	3.31	1.91
16.1	**D6D155**	6D15.5-J	153	A2	3.31	1.91
16.6	**D6D160**	6D16.0-J	137	A3	3.31	1.91
17.6	**D6D170**	6D17.0-J	175	A3	3.31	1.91
18.6	**D6D180**	6D18.0--J	159	A3	3.31	1.91
20.6	**D6D200**	6D20.0-J	185	A3	3.31	1.91
22.6	**D6D220**	6D22.0-M**	225	A3	1.94	0.28
27.6	**D6D270**	6D27.0-M**	300	A3	1.94	0.28
33.6	**D6D330**	6D33.0-M**	350	A3	1.94	0.28
40.6	**D6D400**	6D40.0--M**	460	A3	1.94	0.28
48.6	**D6D480**	6D48.0-M**	600	A3	1.94	0.28
58.6	**D6D580**	6D58.0--N**	760	A3	1.94	0.19

P.D. for "D" Belts = O.D.

‡ Type 1 = Block Type, 2 = Web, 3 = Arm – See page PT7-2

** M-N-P-W are standard mounting only for these parts

D QD SHEAVES - Standard Duty

8-Groove						F = 11.81
O.D.Δ	Part No.	Description	Wt.	Type‡	M	K
12.6	**D8D120**	8D12.0-J	141	A1	3.56	2.16
13.6	**D8D130**	8D13.0-J	163	A1	3.56	2.16
14.1	**D8D135**	8D13.5-J	175	A1	3.56	2.16
14.6	**D8D140**	8D14.0-J	187	A1	3.56	2.16
15.1	**D8D145**	8D14.5-J	200	A1	3.56	2.16
15.6	**D8D150**	8D15.0-J	183	A2	3.56	2.16
16.1	**D8D155**	8D15.5-J	189	A2	3.56	2.16
16.6	**D8D160**	8D16.0-J	197	A2	3.56	2.16
17.6	**D8D170**	8D17.0-J	213	A2	3.56	2.16
18.6	**D8D180**	8D18.0-M**	255	A2	3.94	2.28
20.6	**D8D200**	8D20.0-M**	258	A2	3.94	2.28
22.6	**D8D220**	8D22.0-M**	266	A3	1.94	0.28
27.6	**D8D270**	8D27.0-M**	320	A3	1.94	0.28
33.6	**D8D330**	8D33.0-M**	420	A3	1.94	0.28
40.6	**D8D400**	8D40.0--N**	600	A3	2.19	0.13
48.6	**D8D480**	8D48.0-N**	750	A3	2.19	0.13
58.6	**D8D580**	8D58.0-N**	1000	A3	2.19	0.13

10-Groove						F = 14.69
O.D.Δ	Part No.	Description	Wt.	Type‡	M	K
12.6	**D10D120**	10D12.0-M**	166	A1	3.94	2.28
13.6	**D10D130**	10D13.0-M**	207	A1	3.94	2.28
14.1	**D10D135**	10D13.5-M**	224	A1	3.94	2.28
14.6	**D10D140**	10D14.0-M**	242	A1	3.94	2.28
15.1	**D10D145**	10D14.5-M**	260	A1	3.94	2.28
15.6	**D10D150**	10D15.0-M**	279	A1	3.94	2.28
16.1	**D10D155**	10D15.5-M**	298	A1	3.94	2.28
16.6	**D10D160**	10D16.0-M**	318	A1	3.94	2.28
17.6	**D10D170**	10D17.0-M**	307	A2	3.94	2.28
18.6	**D10D180**	10D18.0-M**	293	A2	3.94	2.28
20.6	**D10D200**	10D20.0-M**	351	A2	3.94	2.28
22.6	**D10D220**	10D22.0--M**	342	A3	2.94	1.28
27.6	**D10D270**	10D27.0-M**	415	A3	2.94	1.28
33.6	**D10D330**	10D33.0-N**	575	A3	3.40	1.34
40.6	**D10D400**	10D40.0-N**	680	A3	3.40	1.34
48.6	**D10D480**	10D48.0-P**	975	A3	2.57	0.19
58.6	**D10D580**	10D58.0-P**	1250	A3	2.57	0.19

12-Groove						F = 17.56
O.D.Δ	Part No.	Description	Wt.	Type‡	M	K
12.6	**D12D120**	12D12.0--M**	187	A1	#N/A!	3.28
13.6	**D12D130**	12D13.0--M**	234	A1	#N/A!	3.28
14.1	**D12D135**	12D13.5--M**	252	A1	#N/A!	3.28
14.6	**D12D140**	12D14.0--M**	271	A1	#N/A!	3.28
15.1	**D12D145**	12D14.5-M**	290	A1	#N/A!	3.28
15.6	**D12D150**	12D15.0--M**	310	A1	#N/A!	3.28
16.1	**D12D155**	12D15.5--M**	330	A1	#N/A!	3.28
16.6	**D12D160**	12D16.0--M**	352	A1	#N/A!	3.28
17.6	**D12D170**	12D17.0--M**	365	A2	#N/A!	3.47
18.6	**D12D180**	12D18.0-M**	391	A2	#N/A!	3.47
20.6	**D12D200**	12D20.0-M**	401	A2	#N/A!	2.28
22.6	**D12D220**	12D22.0--M**	365	A3	#N/A!	2.28
27.6	**D12D270**	12D27.0--N**	505	A3	#N/A!	2.13
33.6	**D12D330**	12D33.0--N**	590	A3	#N/A!	2.13
40.6	**D12D400**	12D40.0--P**	925	A3	#N/A!	0.19
48.6	**D12D480**	12D48.0--P**	1150	A3	#N/A!	0.19
58.6	**D12D580**	12D58.0-P**	1500	A3	#N/A!	0.19

P.D. for "D" Belts = O.D.

‡ Type 1 = Block Type, 2 = Web, 3 = Arm – See page PT7-2

** M-N-P-W are standard mounting only for these parts

SELECTION

Custom-Made Sheaves & Sprockets

V-Belt Sheaves & Synchronous Sprockets

Standard stock products offer the best value for most power transmission operations. But, for requirements that cannot be served with stock products, DODGE manufactures custom-made sheaves and synchronous belt sprockets.

Synchronous Sprockets

V-Belt Sheaves

Custom Construction Options

- Non-stock pitch diameter
- Non-stock number of teeth
- Alternate hub location
- Special material: ductile, steel, aluminum, stainless steel etc.
- Alternate bushing or bore configuration for mounting product onto shaft
- Other non-standard requirements

Hub Locations

- Hub central
- Typical for larger diameter products
- Hub offset
- This location is preferred for wider face widths. It is positioned to accommodate the shaft and provides centralized sheave support
- Hub projection
- Required for access to setscrews on smaller bored-to-size products
- Special coating and plating

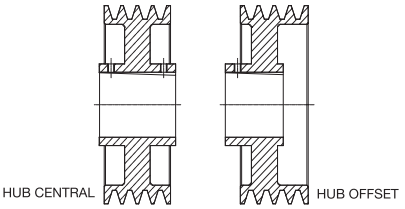

Materials

Stock sheaves, as well as synchronous sprockets, are manufactured typically from high quality gray iron. Frequently specified alternate materials are shown below.

Alternate Materials

Material	Grade	Max. Rim Speed (Fpm)
GRAY IRON:	-	6,500
DUCTILE	65-45-12	8,000
IRON:	80-55-06	10,000
STEEL:	-	10,000

Dynamic (two-plane) balance normally required for rim speeds above 6,500 feet per minute (FPM).
Drives that exceed 8,000 FPM should be reviewed by DODGE Engineering.

Mounting Styles

Bored-to-size

Required when rim diameter cannot accommodate the bushing that is required for the bore size. One keyseat, as well as one or two setscrews are usually specified.

Taper bushed

Specify TAPER-LOCK or QD bushing for required bore size. Verify that hub diameter accommodates bushing. Taper bushed mounting is preferred because this mounting compensates for variations in shaft diameter; provides tight, secure fit; and removes easily for servicing.

Taper bore

For use on taper shafts (sketch below). If hub is not central with face, specify which hub end takes large end of bore. Hub at small end will extend 1/8, beyond the “T” dimension. Keyways are standard size, as well as parallel with the taper, unless specified otherwise.

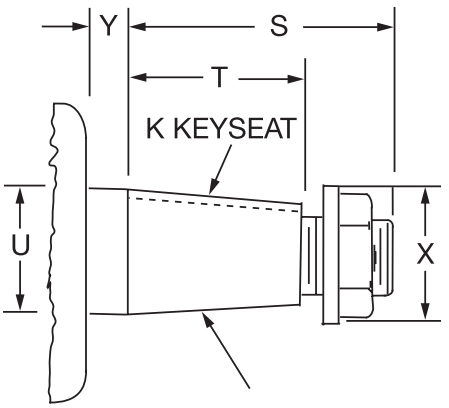

V-Belts

V-drives have been the mainstay of industrial power transmission for over 60 years. During this time, DODGE has been a major influence, designing and developing innovative concepts in V-belt sheaves and supplying the highest quality belts.

Today's V-drives offer quiet, efficient mechanical power transmission. They provide many thousands of hours of performance, even under conditions of shock load and normal drive misalignment. All of these benefits come at an economic value that is unsurpassed.

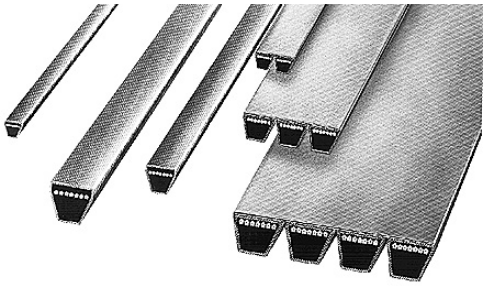

D-V WEDGE BELTS 3VX-5VX-8V

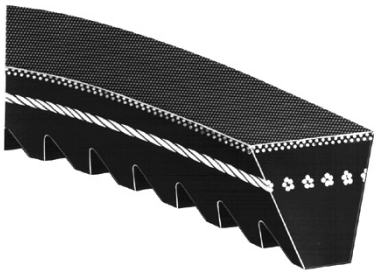

- Oil resistant and static conducting
- Permits compact, lighter weight drives flexibility
- High-strength tension member delivers maximum power with minimum stretch
- Built for long-term dimensional stability
- Molded cog construction under 200-inch belt length is reduced

S-L CLASSIC V-BELTS A-B-C-D-E

- Cable cord envelope construction
- Cool running and flexible
- Strong tensile cords minimize stretch
- Static conducting and heat and oil resistant
- More tolerant of shock loads

CLASSIC COG V-BELTS AX-BX-CX-DX

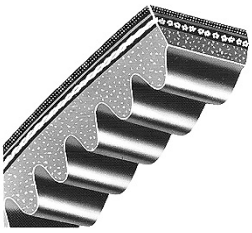

Deliver more horsepower and last longer than conventional belts...

- Fully notched cogs for maximum
- High coefficient rubber edge
- Oil resistant and static conducting
- Proven energy-saving design
- Outlasts conventional belts
- Fewer belts required - drive weight

POLYBAND CLASSIC POLYBAND WEDGE V-BELTS

POLYBAND banded V-belts are engineered to handle those problem drives where vibration, sudden shock loads or misalignment causes belts to turn over, whip or jump off sheave. Two or more belts are inseparable joined together as one single unit. POLYBAND belts may be used without changing sheaves or altering the drive.

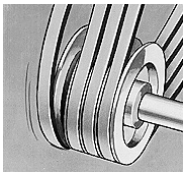

- NO JUMP OFF

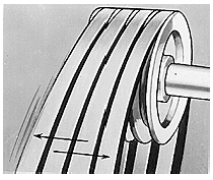

- NO WHIP

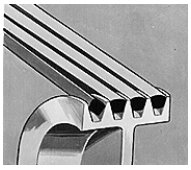

- NO TURN OVER

DOUBLE-V SEALED-LIFE (HEX)

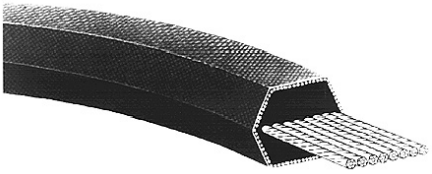

For serpentine drives

- Transmits power from both sides of belt
- Standard AA, BB, CC cross sections
- Runs in standard classical sheaves
- Oil resistant and static conducting

SELECTION

D-V Wedge Narrow Belts

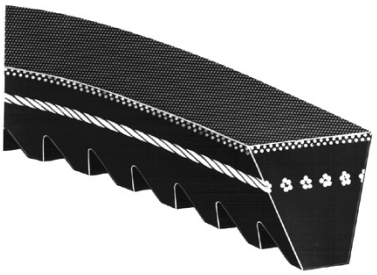

Raw-Edge Molded Cog Construction

Wrapped Construction

- Oil Resistant and Static Conducting
- Permits Compact, Lighter Weight Drives
- Hi-Strength Tension Member Delivers Maximum Power with Minimum Stretch
- Built for Long-Term Dimensional Stability.
- Matched to MPTA/RMA Standards. No additional matching or Matching Codes required.

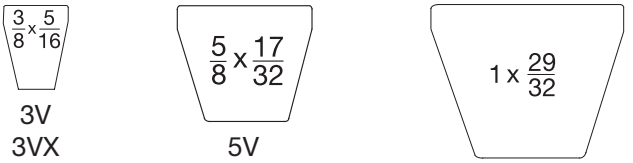

3V 3VX | 5V 5VX | 8V 8VX

3VX				5VX, 5V								8VX, 8V			
Belt No.	**Part No.**	**Wt.**	**Lgth. Δ**	**Belt No.**	**Part No.**	**Wt.**	**Lgth. Δ**	**Belt No.**	**Part No.**	**Wt.**	**Lgth. Δ**	**Belt No.**	**Part No.**	**Wt.**	**Lgth. Δ**
3VX250	**107150**	0.11	25	5VX450		0.51	45	5VX900	**107180**	1.04	90	8VX1000	**107200**	2.97	100
3VX265	**107220**	0.11	27	5VX470		0.54	47	5VX930		1.07	93	8VX1060	**107219**	3.50	106
3VX280	**107151**	0.12	28	5VX490		0.56	49	5VX950	**107195**	1.10	95	8VX1120	**107201**	3.35	112
3VX300	**107229**	0.12	30	5VX500	**107175**	0.57	50	5VX960		1.11	96	8VX1180	**107240**	3.65	118
3VX315	**107152**	0.14	31.5	5VX510		0.59	51	5VX1000	**107181**	1.16	100	8VX1250	**107202**	3.98	125
3VX335	**107230**	0.14	33.5	5VX530	**107233**	0.61	53	5VX1030		1.18	103	8VX1320	**107241**	4.05	132
3VX355	**107153**	0.16	35.5	5VX540		0.63	54	5VX1060	**107196**	1.23	106	8VX1400	**107203**	4.16	140
3VX375	**107166**	0.16	37.5	5VX550		0.63	55	5VX1080		1.24	108	8VX1500	**107242**	4.69	150
3VX400	**107154**	0.16	40	5VX560	**107176**	0.64	56	5VX1120	**107182**	1.30	112	8VX1600	**107204**	5.30	160
3VX425	**107167**	0.17	42.5	5VX570		0.66	57	5VX1150		1.33	115	8VX1700	**107243**	5.27	170
3VX450	**107155**	0.54	45	5VX580		0.67	58	5VX1160		1.34	116	8VX1800	**107205**	5.73	180
3VX475	**107221**	0.20	47.5	5VX590		0.68	59	5VX1180	**107197**	1.37	118	8VX1900	**107244**	5.81	190
3VX500	**107156**	0.22	50	5VX600	**107234**	0.69	60	5VX1230		1.42	123	8VX2000	**107206**	6.05	200
3VX530	**107222**	0.21	53	5VX610		0.70	61	5VX1250	**107183**	1.45	125	8V2120	**107245**	6.80	212
3VX560	**107157**	0.22	56	5VX630	**107177**	0.73	63	5VX1320	**107224**	1.53	132	8V2240	**107207**	7.25	224
3VX600	**107168**	0.24	60	5VX650		0.75	65	5VX1400	**107184**	1.62	140	8V2360	**107215**	7.65	236
3VX630	**107158**	0.27	63	5VX660		0.75	66	5VX1500	**107225**	1.74	150	8V2500	**107208**	7.97	250
3VX670	**107169**	0.29	67	5VX670	**107235**	0.77	67	5VX1600	**107185**	1.86	160	8V2650	**107246**	8.52	265
3VX710	**107159**	0.31	71	5VX680		0.78	68	5VX1700	**107226**	1.97	170	8V2800	**107209**	8.95	280
3VX750	**107170**	0.30	75	5VX690		0.80	69	5VX1800	**107186**	2.10	180	8V3000	**107216**	10.05	300
3VX800	**107160**	0.33	80	5VX710	**107178**	0.82	71	5VX1900	**107227**	2.20	190	8V3150	**107210**	10.50	315
3VX850	**107171**	0.39	85	5VX730		0.84	73	5VX2000	**107187**	2.30	200	8V3350	**107247**	11.20	335
3VX900	**107161**	0.38	90	5VX740		0.85	74	5V2120	**107228**	2.50	212	8V3550	**107211**	11.90	355
3VX950	**107172**	0.40	95	5VX750	**107193**	0.87	75	5V2240	**107188**	2.60	224	8V3750	**107218**	12.60	375
3VX1000	**107162**	0.44	100	5VX780		0.90	78	5V2360	**107236**	2.74	236	8V4000	**107212**	13.40	400
3VX1060	**107223**	0.44	106	5VX800	**107179**	0.92	80	5V2500	**107189**	2.84	250	8V4250	**107248**	14.20	425
3VX1120	**107163**	0.46	112	5VX810		0.93	81	5V2650	**107237**	2.99	265	8V4500	**107213**	15.10	425
3VX1180	**107231**	0.50	118	5VX830		0.96	83	5V2800	**107190**	3.10	280	8V4750	**107217**	15.50	475
3VX1250	**107164**	0.54	125	5VX840		0.97	84	5V3000	**107238**	3.60	300	8V5000	**107214**	16.00	500
3VX1320	**107232**	0.57	132	5VX850	**107194**	0.98	85	5V3150	**107191**	3.80	315	- - - -	**- - - -**	- - - -	- - - -
3VX1400	**107165**	0.62	140	5VX860		0.99	86	5V3350	**107239**	4.00	335	- - - -	**- - - -**	- - - -	- - - -
3VX1500	**107173**	0.56	150	5VX880		1.02	88	5V3550	**107192**	4.30	355	- - - -	**- - - -**	- - - -	- - - -

Δ Outside circumference in inches

DODGE®

D-V Wedge Banded Belts

3VX POLYBAND Narrow Belts (2, 3, 4, 5, and 6 Bands)

Lgth. Δ	Belt No.	Wgt. Per Band	2-BAND P/N	3-BAND P/N	4-BAND P/N	5-BAND P/N	6-BAND P/N
25	R3VX250 Δ	0.10					
26.5	R3VX265 Δ	0.10					
28	R3VX280 Δ	0.10	**108208**	**108209**	**108210**	**108211**	
30	R3VX300 Δ	0.15	**108212**	**108213**	**108214**	**108215**	
31.5	R3VX315 Δ	0.15	**108216**	**108217**	**108218**	**108219**	
33.5	R3VX335 Δ	0.15	**108220**	**108221**	**108222**	**108228**	
35.5	R3VX355 Δ	0.15	**108224**	**108225**	**108226**	**108227**	
37.5	R3VX375 Δ	0.15	**108228**	**108229**	**108230**	**108231**	
40	R3VX400 Δ	0.20	**108232**	**108233**	**108234**	**108235**	
42.5	R3VX425 Δ	0.20	**108236**	**108237**	**108238**	**108239**	
45	R3VX450 Δ	0.20	**108240**	**108241**	**108242**	**108243**	
47.5	R3VX475 Δ	0.20	**108244**	**108245**	**108246**	**108247**	
50	R3VX500 Δ	0.20	**108248**	**108249**	**108250**	**108251**	
53	R3VX530 Δ	2.50	**108252**	**108253**	**108254**	**108255**	
56	R3VX560 Δ	2.50	**108256**	**108257**	**108258**	**108259**	
60	R3VX600 Δ	2.50	**108260**	**108261**	**108262**	**108263**	
63	R3VX630 Δ	0.30	**108264**	**108265**	**108266**	**108267**	
67	R3VX670 Δ	0.30	**108268**	**108269**	**108270**	**108271**	
71	R3VX710 Δ	0.30	**108272**	**108273**	**108274**	**108275**	
75	R3VX750 Δ	0.35	**108276**	**108277**	**108278**	**108279**	
80	R3VX800 Δ	0.35	**108280**	**108281**	**108282**	**108283**	
85	R3VX850 Δ	0.40	**108284**	**108285**	**108286**	**108287**	
90	R3VX900 Δ	0.40	**108288**	**108289**	**108290**	**108291**	
95	R3VX950 Δ	0.45	**108292**	**108293**	**108294**	**108295**	
100	R3VX1000 Δ	0.45	**108296**	**108297**	**108298**	**108299**	
106	R3VX1060 Δ	0.50	**108300**	**108301**	**108302**	**108303**	
112	R3VX1120 Δ	0.50	**108304**	**108305**	**108306**	**108307**	
118	R3VX1180 Δ	0.55	**108308**	**108309**	**108310**	**108311**	
125	R3VX1250 Δ	0.55	**108312**	**108313**	**108314**	**108315**	
132	R3VX1320 Δ	0.60	**108316**	**108317**	**108318**	**108319**	
140	R3VX1400 Δ	0.65	**108320**	**108321**	**108322**	**108323**	

Δ Outside circumference in inches

SELECTION

DODGE®

5VX, 5V POLYBAND Narrow Belts (2, 3, 4, 5, and 6 Bands)

Lgth. Δ	Belt No.	Wgt. Per Band	2-BAND P/N	3-BAND P/N	4-BAND P/N	5-BAND P/N	6-BAND P/N
50	R5VX500 Δ	0.65	**108330**				
53	R5VX530 Δ	0.65					
56	R5VX560 Δ	0.70	**108338**	**108339**	**108340**	**108341**	
60	R5VX600 Δ	0.75	**108342**	**108343**	**108344**	**108345**	
63	R5VX630 Δ	0.80	**108346**	**108347**	**108348**	**108349**	
67	R5VX670 Δ	0.85	**108350**	**108351**	**108352**	**108353**	
71	R5VX710 Δ	0.90	**108354**	**108355**	**108356**	**108357**	
75	R5VX750 Δ	0.95	**108358**	**108359**	**108360**	**108361**	
80	R5VX800 Δ	1.00	**108362**	**108363**	**108364**	**108365**	
85	R5VX850 Δ	1.10	**108366**	**108367**	**108368**	**108369**	
90	R5VX900 Δ	1.15	**108370**	**108371**	**108372**	**108373**	
95	R5VX950 Δ	1.20	**108374**	**108375**	**108376**	**108377**	
100	R5VX1000 Δ	1.30	**108378**	**108379**	**108380**	**108381**	
106	R5VX1060 Δ	1.35	**108382**	**108383**	**108384**	**108385**	
112	R5VX1120 Δ	1.45	**108386**	**108387**	**108388**	**108389**	
118	R5VX1180 Δ	1.50	**108390**	**108391**	**108392**	**108393**	
125	R5VX1250 Δ	1.60	**108394**	**108395**	**108396**	**108397**	
132	R5VX1320 Δ	1.70	**108398**	**108399**	**108400**	**108401**	
140	R5VX1400 Δ	1.80	**108402**	**108403**	**108404**	**108405**	**108329**
150	R5VX1500 Δ	1.90	**108406**	**108407**	**108408**	**108409**	
160	R5VX1600 Δ	2.05	**108410**	**108411**	**108412**	**108413**	
170	R5VX1700 Δ	2.20	**108414**	**108415**	**108416**	**108417**	
180	R5VX1800 Δ	2.30	**108418**	**108419**	**108420**	**108421**	
190	R5VX1900 Δ	2.45	**108422**	**108423**	**108424**	**108425**	
200	R5VX2000 Δ	2.55	**108426**	**108427**	**108428**	**108429**	
212	R5V2120 Δ	2.75	**108430**	**108431**	**108432**	**108433**	
224	R5V2240 Δ	2.90	**108434**	**108435**	**108436**	**108437**	
236	R5V2360 Δ	3.00	**108438**	**108439**	**108440**	**108441**	
250	R5V2500 Δ	3.20	**108442**	**108443**	**108444**	**108445**	
265	R5V2650 Δ	3.40	**108446**	**108447**	**108448**	**108449**	
280	R5V2800 Δ	3.60	**108450**	**108451**	**108452**	**108453**	
300	R5V3000 Δ	3.85	**108454**	**108455**	**108456**	**108457**	
315	R5V3150 Δ	4.05	**108458**	**108459**	**108460**	**108461**	
335	R5V3350 Δ	4.35	**108462**	**108463**	**108464**	**108465**	
355	R5V3550 Δ	4.70	**108466**	**108467**	**108468**	**108469**	

FOR 8V BELTS SEE NEXT PAGE

Δ Outside circumference in inches

DODGE®

8V POLYBAND Narrow Belts (2, 3, 4, 5, and 6 Bands)

Lgth. Δ	Belt No.	Wgt. Per Band	2-BAND P/N	3-BAND P/N	4-BAND P/N	5-BAND P/N	6-BAND P/N
100	R8V1000 Δ	3.3					
106	R8V1060 Δ	3.50	**108486**				
112	R8V1120 Δ	3.70	**108489**	**108490**	**108491**	**108492**	
118	R8V1180 Δ	3.80	**108493**	**108494**	**108495**	**108496**	
125	R8V1250 Δ	4.15	**108498**	**108499**	**108500**	**108501**	
132	R8V1320 Δ	4.35	**108502**	**108503**	**108504**	**108505**	
140	R8V1400 Δ	4.65	**108507**	**108508**	**108509**	**108510**	
150	R8V1500 Δ	5.00	**108511**	**108512**	**108513**	**108514**	
160	R8V1600 Δ	5.35	**108515**	**108516**	**108517**	**108518**	
170	R8V1700 Δ	5.70	**108519**	**108520**	**108521**	**108522**	
180	R8V1800 Δ	6.00	**108524**	**108525**	**108526**	**108527**	
190	R8V1900 Δ	6.35	**108528**	**108529**	**108530**	**108531**	
200	R8V2000 Δ	6.70	**108533**	**108534**	**108535**	**108536**	
212	R8V2120 Δ	7.10	**108537**	**108538**	**108539**	**108540**	**108326**
224	R8V2240 Δ	7.50	**108542**	**108543**	**108544**	**108545**	
236	R8V2360 Δ	7.90	**108546**	**108547**	**108548**	**108549**	
250	R8V2500 Δ	8.40	**108550**	**108551**	**108552**	**108553**	
265	R8V2650 Δ	8.90	**108554**	**108555**	**108556**	**108557**	
280	R8V2800 Δ	9.14	**108559**	**108560**	**108561**	**108562**	
300	R8V3000 Δ	10.10	**108563**	**108564**	**108565**	**108566**	**108558**
315	R8V3150 Δ	10.60	**108567**	**108568**	**108569**	**108570**	
335	R8V3350 Δ	11.30	**108571**	**108572**	**108573**	**108574**	
355	R8V3550 Δ	12.00	**108576**	**108577**	**108578**	**108579**	
375	R8V3750 Δ	12.65	**108580**	**108581**	**108582**	**108583**	
400	R8V4000 Δ	13.50	**108585**	**108586**	**108587**	**108588**	
425	R8V4250 Δ	14.35	**108589**	**108590**	**108591**	**108592**	
450	R8V4500 Δ	15.20	**108594**	**108595**	**108596**	**108597**	
475	R8V4750 Δ	16.05	**108470**	**108471**	**108472**	**108473**	
500	R8V5000 Δ	16.90	**108474**	**108475**	**108476**	**108477**	
560	R8V5600 Δ	18.90	**108478**	**108479**	**108484**	**108488**	
600	R8V6000 Δ	20.25					

Δ Outside circumference in inches

SELECTION

S-L Classic Belts

- Premium Performance at Standard Prices.
- Cool Running and Flexible.
- Strong Tensile Cords Remove Excess Stretch.
- Static Conducting and Heat and Oil Resistant.
- Matched to MPTA/RMA Standards - No additional matching or Match Codes required.

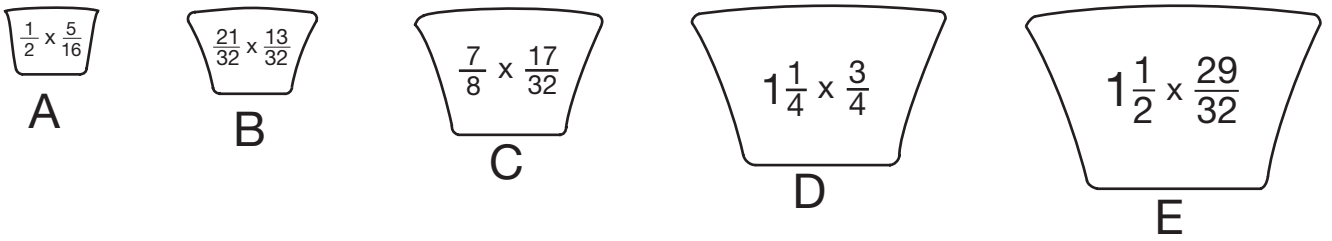

Belt No.	Part No.	Wt.	Datum Lgth. Δ	Belt No.	Part No.	Wt.	Datum Lgth. Δ	Belt No.	Part No.	Wt.	Datum Lgth. Δ	Belt No.	Part No.	Wt.	Datum Lgth. Δ
AP21		0.14	22.3	AP44	**107324**	0.30	45.3	AP67	**107388**	0.44	68.3	AP89	**107922**	0.57	90.3
AP22	**107908**	0.15	23.3	AP45	**107329**	0.32	46.3	AP68	**107016**	0.80	69.3	AP90	**107022**	0.57	91.3
AP23		0.16	24.3	AP46	**107007**	0.31	47.3	AP69	**107913**	0.44	70.3	AP91	**107923**	0.57	92.3
AP24	**107910**	0.17	25.3	AP47	**107330**	0.34	48.3	AP70	**107252**	0.46	71.3	AP92	**107277**	0.58	93.3
AP25		0.18	26.3	AP48	**107008**	0.34	49.3	AP71	**107017**	0.46	72.3	AP93	**107430**	0.58	94.3
AP26	**107001**	0.20	27.9	AP49	**107272**	0.34	50.3	AP72	**107914**	0.48	73.3	AP94	**107924**	0.60	95.3
AP27	**107417**	0.19	28.3	AP50	**107331**	0.35	51.3	AP73	**107915**	0.48	74.3	AP95	**107925**	0.62	96.3
AP28	**107320**	0.21	29.3	AP51	**107009**	0.36	52.3	AP74	**107343**	0.48	75.3	AP96	**107023**	0.65	97.3
AP29	**107418**	0.21	30.3	AP52	**107332**	0.38	53.3	AP75	**107018**	0.48	76.3	AP97	**107926**	0.65	98.3
AP30	**107321**	0.23	31.3	AP53	**107010**	0.37	54.3	AP76	**107420**	0.47	77.3	AP98	**107431**	0.70	99.3
AP31	**107002**	0.24	32.3	AP54	**107250**	0.38	55.3	AP77	**107916**	0.50	78.3	AP100	**107346**	0.67	101.3
AP32	**107322**	0.24	33.3	AP55	**107011**	0.38	56.3	AP78	**107019**	0.51	79.3	AP103		0.68	104.3
AP33	**107003**	0.25	34.3	AP56	**107251**	0.37	57.3	AP79	**107917**	0.52	80.3	AP105	**107024**	0.68	106.3
AP34	**107278**	0.26	35.3	AP57	**107273**	0.40	58.3	AP80	**107020**	0.51	81.3	AP110	**107253**	0.70	111.3
AP35	**107004**	0.26	36.3	AP58	**107274**	0.40	59.3	AP81	**107276**	0.52	82.3	AP112	**107025**	0.74	113.3
AP36	**107270**	0.27	37.3	AP59	**107912**	0.40	60.3	AP82	**107918**	0.55	83.3	AP120	**107026**	0.75	121.3
AP37	**107129**	0.27	38.3	AP60	**107012**	0.41	61.3	AP83	**107344**	0.50	84.3	AP128	**107027**	0.85	129.3
AP38	**107005**	0.26	39.3	AP61	**107333**	0.41	62.3	AP84	**107919**	0.53	85.3	AP136	**107028**	0.84	137.3
AP39	**107323**	0.29	40.3	AP62	**107013**	0.66	63.3	AP85	**107021**	0.55	86.3	AP144	**107029**	1.00	145.3
AP40	**107271**	0.29	41.3	AP63	**107387**	0.40	64.3	AP86	**107920**	0.56	87.3	AP158	**107254**	1.10	159.3
AP41	**107419**	0.29	42.3	AP64	**107014**	0.41	65.3	AP87	**107921**	0.58	88.3	AP173	**107255**	1.20	174.3
AP42	**107006**	0.27	43.3	AP65	**107122**	0.42	66.3	AP88	**107345**	0.60	89.3	AP180	**107256**	1.20	181.3
AP43	**107249**	0.31	44.3	AP66	**107015**	0.43	67.3								

Δ Datum Length in inches

S-L Classic Belts

B, C, D, E S-L Classic Belts

Belt No.	Part No.	Wt.	Datum Lgth. Δ
B-Belts			
BP25		0.28	26.8
BP26		0.29	27.8
BP28	**107932**	0.30	29.8
BP29	**107933**	0.29	30.8
BP30		0.30	31.8
BP31		0.32	32.8
BP32	**107389**	0.36	33.8
BP33		0.34	34.8
BP34	**107390**	0.34	35.8
BP35	**107030**	0.39	36.8
BP36	**107391**	0.39	37.8
BP37	**107936**	0.41	38.8
BP38	**107031**	0.44	39.8
BP39	**107937**	0.43	40.8
BP40	**107279**	0.44	41.8
BP41	**107280**	0.45	42.8
BP42	**107032**	0.44	43.8
BP43	**107349**	0.46	44.8
BP44	**107281**	0.50	45.8
BP45	**107433**	0.48	46.8
BP46	**107033**	0.49	47.8
BP47	**107408**	0.52	48.8
BP48	**107034**	0.51	49.8
BP49	**107350**	0.53	50.8
BP50	**107282**	0.54	51.8
BP51	**107035**	0.51	52.8
BP52	**107283**	0.55	53.8
BP53	**107036**	0.57	54.8
BP54	**107284**	0.59	55.8
BP55	**107037**	0.59	56.8
BP56	**107285**	0.59	57.8
BP57	**107286**	0.59	58.8
BP58	**107287**	0.61	59.8
BP59	**107288**	0.59	60.8
BP60	**107038**	0.60	61.8
BP61	**107289**	0.61	62.8
BP62	**107039**	0.62	63.8
BP63	**107290**	0.63	64.8
BP64	**107040**	0.64	65.8
BP65	**107041**	0.65	66.8
BP66	**107042**	0.66	67.8
BP67	**107291**	0.69	68.8
BP68	**107043**	0.67	69.8
BP69	**107409**	0.70	70.8
BP70	**107275**	0.72	71.8
BP71	**107044**	0.69	72.8
BP72	**107292**	0.73	73.8
BP73	**107293**	0.73	74.8
BP74	**107294**	0.73	75.8
BP75	**107045**	0.78	76.8
BP76	**107410**	0.76	77.8
BP77	**107295**	0.76	78.8

Belt No.	Part No.	Wt.	Datum Lgth. Δ
B-Belts (Con't)			
BP78	**107046**	0.74	79.8
BP79	**107257**	0.80	80.8
BP80	**107047**	0.85	81.8
BP81	**107048**	0.82	82.8
BP82	**107258**	0.84	83.8
BP83	**107049**	0.79	84.8
BP84	**107411**	0.81	85.8
BP85	**107050**	0.87	86.8
BP86	**107434**	0.84	87.8
BP87	**107296**	0.87	88.8
BP88	**107297**	0.87	89.8
BP89	**107938**	0.90	90.8
BP90	**107051**	0.94	91.8
BP91	**107939**	0.87	92.8
BP92	**107940**	0.90	93.8
BP93	**107052**	0.91	94.8
BP94	**107941**	0.93	95.8
BP95	**107259**	0.95	96.8
BP96	**107260**	0.96	97.8
BP97	**107053**	0.95	98.8
BP98		0.96	99.8
BP99	**107128**	0.99	100.8
BP100	**107069**	1.02	101.8
BP101		1.06	102.8
BP103	**107054**	1.07	104.8
BP105	**107055**	1.07	106.8
BP106		1.08	107.8
BP108	**107298**	1.08	109.8
BP111		1.15	112.8
BP112	**107056**	1.14	113.8
BP116	**107412**	1.18	117.8
BP118		1.18	119.8
BP120	**107057**	1.18	121.8
BP123		1.25	124.8
BP124	**107299**	1.26	125.8
BP126		1.25	127.8
BP128	**107058**	1.28	129.8
BP130		1.35	131.8
BP133	**107261**	1.38	134.8
BP136	**107059**	1.34	137.8
BP140		1.43	141.8
BP144	**107060**	1.45	145.8
BP148	**107351**	1.39	149.8
BP150	**107000**	1.49	151.8
BP154		1.54	155.8
BP158	**107061**	1.55	159.8
BP162	**107125**	1.58	163.8
BP173	**107062**	1.69	174.8
BP180	**107063**	1.72	181.8
BP190	**107352**	1.85	191.8
BP191		1.95	192.8
BP195	**107064**	2.00	196.8

Belt No.	Part No.	Wt.	Datum Lgth. Δ
B-Belts (Con't)			
BP205	**107353**	2.00	206.8
BP210	**107065**	2.07	211.8
BP225	**107262**	2.21	225.3
BP240	**107066**	2.39	240.3
BP255	**107263**	2.56	255.3
BP270	**107067**	2.75	270.3
BP285	**107264**	2.70	285.3
BP300	**107068**	3.40	300.3
BP315	**107265**	3.20	315.3
C-BELTS			
CP51	**107072**	0.99	53.9
CP55	**107354**	1.07	57.9
CP60	**107073**	1.15	62.9
CP68	**107074**	1.30	70.9
CP71		1.34	73.9
CP72	**107699**	1.36	74.9
CP75	**107075**	1.42	77.9
CP78	**107124**	1.49	80.9
CP81	**107076**	1.50	83.9
CP85	**107077**	1.65	87.9
CP90	**107078**	1.64	92.9
CP96	**107079**	1.82	98.9
CP97	**107356**	1.83	99.9
CP99	**107361**	1.86	101.9
CP100	**107126**	1.88	102.9
CP101		1.89	103.9
CP105	**107080**	1.90	107.9
CP108	**107363**	1.90	110.9
CP109	**107123**	2.02	111.9
CP111	**107365**	2.10	113.9
CP112	**107081**	2.13	114.9
CP115	**107364**	2.26	117.9
CP120	**107082**	2.22	122.9
CP124	**107127**	2.42	126.9
CP128	**107083**	2.35	130.9
CP136	**107084**	2.56	138.9
CP144	**107085**	2.64	146.9
CP148		2.80	150.9
CP150	**107957**	2.82	152.9
CP158	**107086**	3.01	160.9
CP162	**107087**	3.09	164.9
CP173	**107088**	3.39	175.9
CP180	**107089**	3.47	182.9
CP195	**107090**	3.65	197.9
CP210	**107091**	8.03	212.9
CP225	**107266**	4.16	225.9
CP240	**107092**	4.31	240.9
CP255	**107267**	4.70	255.9
CP270	**107093**	5.03	270.9
CP285	**107268**	5.20	285.9
CP300	**107094**	5.50	300.9
CP315	**107095**	5.80	315.9

Belt No.	Part No.	Wt.	Datum Lgth. Δ
C-Belts (Con't)			
CP330	**107096**	6.00	330.9
CP345	**107097**	6.30	345.9
CP360	**107098**	7.40	360.9
CP390	**107099**	7.10	390.9
CP420	**107269**	8.03	420.9
D-BELTS			
DP120	**107100**	4.30	123.3
DP128	**107101**	4.60	131.3
DP144	**107102**	5.10	147.3
DP158	**107103**	5.58	161.3
DP162	**107104**	5.65	165.3
DP173	**107105**	11.00	176.3
DP180	**107106**	6.35	183.3
DP195	**107107**	6.90	198.3
DP210	**107108**	7.40	213.3
DP225	**107146**	7.90	225.8
DP240	**107109**	8.49	240.8
DP255	**107148**	8.90	255.8
DP270	**107110**	8.90	270.8
DP285	**107149**	9.90	285.8
DP300	**107111**	10.30	300.8
DP315	**107112**	11.00	315.8
DP330	**107113**	11.50	330.8
DP345	**107114**	12.00	345.8
DP360	**107115**	12.76	360.8
DP390	**107116**	13.60	390.8
DP420	**107117**	14.70	420.8
DP450	**107373**	15.70	450.8
DP480	**107118**	16.80	480.8
DP540	**107119**	18.90	540.8
DP600	**107120**	20.90	600.8
DP660	**107070**	23.00	660.8
E-BELTS ◊			
EP144		8.00	148.5
EP180	**107131**	9.40	184.5
EP195	**107132**	10.10	199.5
EP210	**107133**	10.90	214.5
EP225		12.10	229.5
EP240	**107135**	12.20	241.5
EP270		14.50	271.5
EP300	**107137**	15.30	301.0
EP330	**107138**	16.80	331.0
EP360	**107139**	18.30	361.0
EP390	**107140**	19.80	391.0
EP420	**107141**	21.40	421.0
EP480	**107142**	27.00	481.0
EP540	**107143**	30.00	541.0
EP600	**107144**	34.00	601.0
EP660	**107174**	36.00	661.0

Δ Datum Length in inches

◊ E-BELTS: Recommended for Replacement Only - Not for New Drives (Use 8V Belts)

SELECTION

DODGE®

S-L Classic Banded Belts
B POLYBAND Classic Belts (2, 3, 4 and 5 Bands)

Datum Lgth. Δ	Belt. No.	Wgt. per Band	2-Band P/N	3-Band P/N	4-Band P/N	5-Band P/N
36.8	RBP35 Δ	0.50				
39.8	RBP38 Δ	0.55				
41.8	RBP40 Δ	0.55				
42.8	RBP41 Δ	0.55				
43.8	RBP42 Δ	0.60	107308	107309	107310	107311
44.8	RBP43 Δ	0.60	107421	107451	107452	107453
45.8	RBP44 Δ	0.60				
47.8	RBP46 Δ	0.65	107312	107313	107314	107315
49.8	RBP48 Δ	0.65	107316	107317	107318	107319
50.8	RBP49 Δ	0.70				
51.8	RBP50 Δ	0.70	107454	107455	107464	107465
52.8	RBP51 Δ	0.70	107325	107326	107327	107328
53.8	RBP52 Δ	0.70	107466	107467	107468	107481
54.8	RBP53 Δ	0.75	107334	107335	107336	107337
55.8	RBP54 Δ	0.75	107482	107483	107484	107485
56.8	RBP55 Δ	0.75	107338	107339	107340	107341
57.8	RBP56 Δ	0.75	107494	107495	107496	107497
58.8	RBP57 Δ	0.80	107498	107503	107504	107505
59.8	RBP58 Δ	0.80	107506	107507	107520	107521
60.8	RBP59 Δ	0.80	107522	107523	107524	107541
61.8	RBP60 Δ	0.85	107357	107358	107359	107360
62.8	RBP61 Δ	0.85	107542	107543	107544	107545
63.8	RBP62 Δ	0.85	107366	107367	107368	107369
64.8	RBP63 Δ	0.85	107550	107551	107552	107553
65.8	RBP64 Δ	0.90	107375	107376	107377	107378
66.8	RBP65 Δ	0.90	107379	107380	107381	107382
67.8	RBP66 Δ	0.90	107383	107384	107385	107386
68.8	RBP67 Δ	0.90	107554	107563	107564	107565
69.8	RBP68 Δ	0.90	107392	107393	107394	107395
71.8	RBP70 Δ	0.95	107396	107397	107398	107399
72.8	RBP71 Δ	0.95	107400	107401	107402	107403
73.8	RBP72 Δ	1.00	107566	107567	107568	107569
74.8	RBP73 Δ	1.00	107660	107651	107652	107653
75.8	RBP74 Δ	1.00	107654	107659	107660	107661
75.8	RBP75 Δ	1.00	107404	107405	107406	107407
78.8	RBP77 Δ	1.05	107662	107663	107668	107669
79.8	RBP78 Δ	1.05	107413	107414	107415	107416
80.8	RBP79 Δ	1.10	107670	107671	107672	107677
81.8	RBP80 Δ	1.10	107422	107423	107424	107425
82.8	RBP81 Δ	1.10	107426	107427	107428	107429
83.8	RBP82 Δ	1.10	107678	107894	107895	107896
84.8	RBP83 Δ	1.15	107435	107436	107437	107438
86.8	RBP85 Δ	1.15	107439	107440	107441	107442
88.8	RBP87 Δ	1.20	107897	107898	107899	107942
89.8	RBP88 Δ	1.20	107943	107944	107948	107949
91.8	RBP90 Δ	1.20	107443	107444	107445	107446
94.8	RBP93 Δ	1.25	107447	107448	107449	107450
96.8	RBP95 Δ	1.30	107950	107951	107952	107953
97.8	RBP96 Δ	1.30	107456	107457	107458	107459
98.8	RBP97 Δ	1.30	107460	107461	107462	107463

Δ Datum Length in inches

DODGE®

S-L Classic Banded Belts
B POLYBAND Classic Belts (2, 3, 4 and 5 Bands) (Cont'd)

Datum Lgth. Δ	Belt. No.	Wgt. per Band	2-Band P/N	3-Band P/N	4-Band P/N	5-Band P/N
100.8	RBP99 Δ	1.35	**107954**	**107955**	**107956**	**107979**
101.8	RBP100 Δ	1.35	**107469**	**107470**	**107471**	**107472**
104.8	RBP103 Δ	1.40	**107473**	**107474**	**107475**	**107476**
106.8	RBP105 Δ	1.45	**107477**	**107478**	**107479**	**107480**
109.8	RBP108 Δ	1.45	**107980**	**107981**	**107982**	**107983**
113.8	RBP112 Δ	1.50	**107486**	**107487**	**107488**	**107489**
121.8	RBP120 Δ	1.65	**107490**	**107491**	**107492**	**107493**
125.8	RBP124 Δ	1.70	**107984**	**107985**	**107986**	**107987**
129.8	RBP128 Δ	1.75	**107499**	**107500**	**107501**	**107502**
134.8	RBP133 Δ	1.80	**107988**	**107989**	**107990**	**107991**
137.8	RBP136 Δ	1.85	**107508**	**107509**	**107510**	**107511**
145.8	RBP144 Δ	1.95	**107512**	**107513**	**107514**	**107515**
149.8	RBP148 Δ	2.00	**107992**	**107993**	**107994**	**107995**
159.8	RBP158 Δ	2.15	**107516**	**107517**	**107518**	**107519**
163.8	RBP162 Δ	2.20	**107996**	**107997**	**107998**	**108765**
174.8	RBP173 Δ	2.35	**107525**	**107526**	**107527**	**107528**
181.8	RBP180 Δ	2.45	**107529**	**107530**	**107531**	**107532**
196.8	RBP195 Δ	2.65	**107533**	**107534**	**107535**	**107536**
211.8	RBP210 Δ	2.85	**107537**	**107538**	**107539**	**107540**
225.3	RBP225 Δ	3.00	**108766**	**108767**	**108768**	**108769**
240.3	RBP240 Δ	3.20	**107546**	**107547**	**107548**	**107549**
255.3	RBP255 Δ	3.40	**108770**	**108771**	**108772**	**108773**
270.3	RBP270 Δ	3.60	**107555**	**107556**	**107557**	**107558**
285.3	RBP285 Δ	3.80				
300.3	RBP300 Δ	4.00	**107559**	**107560**	**107561**	**107562**
315.3	RBP315 Δ	4.20	**108774**	**108775**	**108776**	**108777**

SELECTION

DODGE®

S-L Classic Banded Belts
C POLYBAND Classic Belts (2, 3, 4 and 5 Bands)

Datum Lgth. Δ	Belt. No.	Wgt. per Band	2-Band P/N	3-Band P/N	4-Band P/N	5-Band P/N
53.9	RCP51 Δ	1.20				
57.9	RCP55 Δ	1.30				
62.9	RCP60 Δ	1.40	**107574**	**107575**	**107576**	**107577**
70.9	RCP68 Δ	1.55	**107578**	**107579**	**107580**	**107581**
73.9	RCP71 Δ	1.65				
77.9	RCP75 Δ	1.70	**107582**	**107583**	**107584**	**107585**
83.9	RCP81 Δ	1.85	**107586**	**107587**	**107588**	**107589**
87.9	RCP85 Δ	1.95	**107590**	**107591**	**107592**	**107593**
92.9	RCP90 Δ	2.05	**107594**	**107595**	**107596**	**107597**
98.9	RCP96 Δ	2.20	**107598**	**107599**	**107600**	**107601**
99.9	RCP97 Δ	2.20				
101.9	RCP99 Δ	2.25	**108778**	**108779**	**108780**	**108781**
102.9	RCP100 Δ	2.30				
107.9	RCP105 Δ	2.40	**107602**	**107603**	**107604**	**107605**
110.9	RCP108 Δ	2.45	**108782**	**108783**	**108784**	**108785**
111.9	RCP109 Δ	2.50	**108786**	**108787**	**108788**	**108789**
114.9	RCP112 Δ	2.55	**107606**	**107607**	**107608**	**107609**
122.9	RCP120 Δ	2.70	**107610**	**107611**	**107612**	**107613**
126.9	RCP124 Δ	2.80	**108790**	**108791**	**108792**	**108793**
130.9	RCP128 Δ	2.80	**107614**	**107615**	**107616**	**107617**
138.9	RCP136 Δ	3.05	**107618**	**107619**	**107620**	**107621**
146.9	RCP144 Δ	3.25	**107622**	**107623**	**107624**	**107625**
160.9	RCP158 Δ	3.55	**107626**	**107627**	**107628**	**107629**
164.9	RCP162 Δ	3.65	**107630**	**107631**	**107632**	**107633**
175.9	RCP173 Δ	3.90	**107634**	**107635**	**107636**	**107637**
182.9	RCP180 Δ	4.05	**107638**	**107639**	**107640**	**107641**
197.9	RCP195 Δ	4.40	**107642**	**107643**	**107644**	**107645**
212.9	RCP210 Δ	4.70	**107646**	**107647**	**107648**	**107649**
225.9	RCP225 Δ	5.00	**107679**	**107680**	**107681**	**107682**
240.9	RCP240 Δ	5.35	**107655**	**107656**	**107657**	**107658**
255.9	RCP255 Δ	5.65	**107684**	**107685**	**107686**	**107687**
270.9	RCP270 Δ	6.00	**107664**	**107665**	**107666**	**107667**
285.9	RCP285 Δ	6.35	**107689**	**107690**	**107691**	**107692**
300.9	RCP300 Δ	6.65	**107673**	**107674**	**107675**	**107676**
315.9	RCP315 Δ	7.00	**108794**	**108795**	**108796**	**108797**
330.9	RCP330 Δ	7.35	**108798**	**108799**	**108876**	**108877**
345.9	RCP345 Δ	7.65	**108878**	**108879**	**108880**	**108881**
360.9	RCP360 Δ	8.00	**108882**	**108883**	**108884**	**108885**
390.9	RCP390 Δ	8.65	**108886**	**108887**	**108888**	**108889**
420.9	RCP420 Δ	9.35	**108890**	**108891**	**108892**	**108893**

Δ Datum Length in inches

DODGE®

S-L Classic Banded Belts
D POLYBAND Classic Belts (2, 3, 4 and 5 Bands)

Datum Lgth. Δ	Belt. No.	Wgt. per Band	2-Band P/N	3-Band P/N	4-Band P/N	5-Band P/N
123.3	RDP120 Δ	5.05	**107700**	**107701**	**107702**	**107703**
131.3	RDP128 Δ	5.40				
147.3	RDP144 Δ	6.05	**107708**	**107709**	**107710**	**107711**
161.3	RDP158 Δ	6.65	**107712**	**107713**	**107714**	**107715**
165.3	RDP162 Δ	6.80	**107716**	**107717**	**107718**	**107719**
176.3	RDP173 Δ	7.25	**107720**	**107721**	**107722**	**107723**
183.3	RDP180 Δ	7.50	**107724**	**107725**	**107726**	**107727**
198.3	RDP195 Δ	8.15	**107728**	**107729**	**107730**	**107731**
213.3	RDP210 Δ	8.75	**107732**	**107733**	**107734**	**107735**
225.8	RDP225 Δ	9.30	**107736**	**107737**	**107738**	**107739**
240.8	RDP240 Δ	9.90	**107741**	**107742**	**107743**	**107744**
255.8	RDP255 Δ	10.50	**107745**	**107746**	**107747**	**107748**
270.8	RDP270 Δ	11.15	**107750**	**107751**	**107752**	**107753**
285.8	RDP285 Δ	11.75	**107754**	**107755**	**107756**	**107757**
300.8	RDP300 Δ	12.35	**107759**	**107760**	**107761**	**107762**
315.8	RDP315 Δ	13.00	**107777**	**107778**	**107779**	**107780**
330.8	RDP330 Δ	13.60	**107781**	**107782**	**107783**	**107784**
345.8	RDP345 Δ	14.20	**107695**	**107696**	**107697**	**107698**
360.8	RDP360 Δ	14.85	**107960**	**107961**	**107962**	**107963**
390.8	RDP390 Δ	16.10	**107764**	**107765**	**107766**	**107767**
420.8	RDP420 Δ	17.30	**107769**	**107770**	**107771**	**107772**
450.8	RDP450 Δ	18.55	**107964**	**107965**	**107966**	**107967**
480.8	RDP480 Δ	19.80	**107773**	**107774**	**107775**	**107776**
540.8	RDP540 Δ	22.25		**107968**	**107969**	**107970**
600.8	RDP600 Δ	24.70	**107971**	**107972**	**107973**	**107974**
660.8	RDP660 Δ	27.15	**107975**	**107976**	**107977**	**107978**

Δ Datum Length in inches

SELECTION

Classic Cog Belts

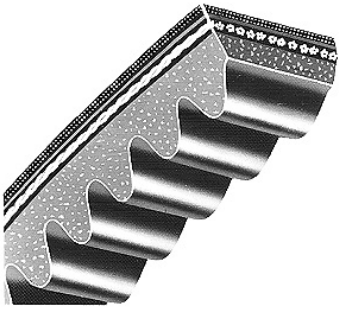

Deliver more horsepower and last longer than conventional belts

- Fully notched cogs for maximum flexibility.
- High coefficient, energy-efficient rubber edge.
- Proven energy-saving design.
- Outlast conventional belts.
- Fewer belts required - drive weight is reduced.
- Matched to MPTA/RMA Standards - No Additional matching or Match Codes Required

Belt No.	Part No.	Wt.	Datum Lgth.
AX BELTS			
AX25	**108867**	.17	26.3
AX26	**108640**	.18	27.3
AX27	**108868**	.19	28.3
AX31	**108641**	.21	32.3
AX32	**108869**	.21	33.3
AX33	**108642**	.22	34.3
AX34	**108643**	.23	35.3
AX35	**108644**	.24	36.3
AX36	**108645**	.24	37.3
AX37	**108646**	.25	38.3
AX38	**108647**	.26	39.3
AX42	**108648**	.28	43.3
AX43	**108649**	.29	44.3
AX46	**108650**	.31	47.3
AX48	**108651**	.32	49.3
AX51	**108652**	.34	52.3
AX53	**108653**	.35	54.3
AX54	**108654**	.36	55.3
AX55	**108655**	.36	56.3
AX56	**108656**	.37	57.3
AX60	**108657**	.40	61.3
AX62	**108658**	.41	63.3
AX64	**108659**	.42	65.3
AX66	**108660**	.43	67.3
AX68	**108661**	.45	69.3
AX70	**108662**	.46	71.3
AX71	**108663**	.47	72.3
AX75	**108664**	.49	76.3
AX78	**108665**	.51	79.3
AX80	**108666**	.52	81.3
AX85	**108667**	.55	86.3
AX90	**108668**	.59	91.3
AX96	**108669**	.62	97.3

Belt No.	Part No.	Wt.	Datum Lgth.
AX BELTS (CON'T)			
AX105	**108670**	.68	106.3
AX110	**108671**	.71	111.3
AX112	**108672**	.73	113.3
AX120	**108673**	.74	121.3
AX128	**108674**	.78	129.3
AX136	**108675**	.98	137.3
BX-BELTS			
BX35	**108676**	.40	36.8
BX38	**108677**	.43	39.8
BX42	**108678**	.48	43.8
BX46	**108679**	.52	47.8
BX48	**108680**	.54	49.8
BX50	**108681**	.56	51.8
BX51	**108682**	.57	52.8
BX52	**108683**	.58	53.8
BX53	**108684**	.59	54.8
BX54	**108685**	.60	55.8
BX55	**108686**	.61	56.8
BX56	**108687**	.62	57.8
BX59	**108688**	.66	60.8
BX60	**108689**	.67	61.8
BX61	**108690**	.68	62.8
BX62	**108691**	.69	63.8
BX63	**108692**	.70	64.8
BX64	**108693**	.71	65.8
BX65	**108694**	.72	66.8
BX66	**108695**	.73	67.8
BX67	**108696**	.74	68.8
BX68	**108697**	.75	69.8
BX70	**108698**	.77	71.8
BX71	**108699**	.78	72.8
BX75	**108700**	.82	76.8
BX77	**108701**	.85	78.8

Belt No.	Part No.	Wt.	Datum Lgth.
BX-BELTS (CON'T)			
BX78	**108702**	.86	79.8
BX79	**108703**	.87	80.8
BX80	**108704**	.88	81.8
BX81	**108705**	.89	82.8
BX82	**108706**	.90	83.8
BX83	**108707**	.91	84.8
BX85	**108708**	.93	86.8
BX90	**108709**	.98	91.8
BX93	**108710**	1.01	94.8
BX95	**108711**	1.03	96.8
BX96	**108712**	1.05	97.8
BX97	**108713**	1.06	98.8
BX99	**108714**	1.08	100.8
BX100	**108715**	1.09	101.8
BX103	**108716**	1.12	104.8
BX105	**108717**	1.14	106.8
BX112	**108718**	1.21	113.8
BX113	**108719**	1.22	114.8
BX116	**108720**	1.26	117.8
BX120	**108721**	1.30	121.8
BX124	**108722**	1.26	125.8
BX128	**108723**	1.30	129.8
BX133	**108724**	1.34	134.8
BX136	**108725**	1.37	137.8
BX144	**108726**	1.45	145.8
BX150	**108727**	1.51	151.8
BX158	**108728**	1.59	159.8
BX162	**108729**	1.63	163.8
BX173	**108730**	1.74	174.8
BX180	**108731**	1.81	181.8
BX195	**108732**	1.96	196.8
BX210	**108733**	2.09	211.8
BX240	**108734**	2.36	240.3

Belt No.	Part No.	Wt.	Datum Lgth.
BX BELTS (CON'T)			
BX270	**108735**	2.65	270.3
BX300	**108637**	3.0	300.3
CX-BELTS			
CX51	**108736**	1.07	53.9
CX60	**108737**	1.24	62.9
CX68	**108738**	1.39	70.9
CX75	**108739**	1.53	77.9
CX81	**108740**	1.64	83.9
CX85	**108741**	1.72	87.9
CX90	**108742**	1.81	92.9
CX96	**108743**	1.93	98.9
CX105	**108744**	2.10	107.9
CX109	**108745**	2.18	111.9
CX112	**108746**	2.24	114.9
CX115	**108747**	2.29	117.9
CX120	**108748**	2.39	122.9
CX128	**108749**	2.42	130.9
CX136	**108750**	2.49	138.9
CX144	**108751**	2.63	146.9
CX150	**108752**	2.74	152.9
CX158	**108753**	2.88	160.9
CX162	**108754**	2.95	164.9
CX173	**108755**	3.15	175.9
CX180	**108756**	3.27	182.9
CX195	**108757**	3.54	197.9
CX210	**108758**	3.77	212.9
CX225	**108896**	4.0	227.9
CX240	**108759**	4.30	240.9
CX270	**108760**	4.83	270.9
CX285	**108638**	4.7	285.9
CX300	**108639**	4.9	300.9
CX330	**108762**	5.3	330.9
CX360	**108764**	5.8	360.9

DODGE®

Double-V (Hex) Belts

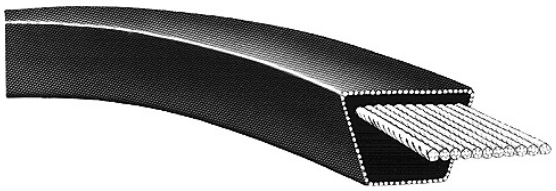

- For Serpentine Drives
- Static Conducting
- Oil Resistant

AA, BB, CC, Double-V (Hex) Belts

Belt No.	Part No.	Wt.	Datum Lgth.	Belt No.	Part No.	Wt.	Datum Lgth.	Belt No.	Part No.	Wt.	Datum Lgth.	Belt No.	Part No.	Wt.	Datum Lgth.
AA BELTS				**BB BELTS (CON'T.)**				**BB BELTS (CON'T.)**				**CC BELTS**			
AA51	**109125**	0.50	53.1	BB73	**109209**	3.30	75.9	BB140	**109223**	2.00	142.9	CC75	**109235**	1.72	79.2
AA55	**109087**	0.60	57.1	BB74	**109210**	1.20	76.9	BB144	**109091**	2.00	146.9	CC81	**109153**	1.80	85.2
AA60	**109126**	0.50	62.1	BB75	**109138**	1.00	77.9	BB155	**109202**	2.00	157.9	CC85	**109154**	1.90	89.5
AA62		0.50	64.1	BB76		1.00	78.9	BB157		2.10	159.9	CC90	**109155**	2.00	94.2
AA64	**109120**	0.70	66.1	BB77		1.10	79.9	BB158	**109092**	2.10	160.9	CC96	**109156**	2.20	100.2
AA66	**109121**	0.70	68.1	BB81	**109139**	1.10	83.9	BB160		2.20	162.9	CC105	**109157**	2.40	109.2
AA68	**109127**	0.50	70.1	BB83	**109211**	1.10	85.9	BB162		2.20	164.9	CC112	**109158**	2.50	116.2
AA70	**109122**	0.70	72.1	BB85	**109140**	1.20	87.9	BB168		2.30	170.9	CC119		2.60	123.2
AA75	**109128**	0.60	77.1	BB89		1.20	91.9	BB169		2.30	171.9	CC120	**109159**	2.70	124.2
AA78	**109123**	0.90	80.1	BB90	**109141**	1.20	92.9	BB170		2.30	172.9	CC128	**109160**	2.90	132.2
AA80	**109129**	0.60	82.1	BB92	**109197**	1.20	94.9	BB173	**109093**	2.30	175.9	CC136	**109236**	3.26	140.2
AA85	**109130**	0.71	87.1	BB93	**109198**	1.20	95.9	BB180	**109094**	2.40	182.9	CC144	**109161**	3.20	148.2
AA90	**109131**	0.80	92.1	BB94	**109199**	1.20	96.9	BB182		2.40	184.9	CC148	**109237**	3.54	152.2
AA92		0.80	94.1	BB96		1.30	98.9	BB190		2.60	192.9	CC158	**109162**	3.50	162.2
AA96	**109132**	0.80	98.1	BB97	**109142**	1.30	99.9	BB195	**109148**	2.60	197.9	CC162	**109163**	3.80	166.2
AA105	**109133**	0.90	107.1	BB103	**109213**	1.66	105.9	BB210	**109149**	2.60	212.9	CC173	**109164**	3.80	177.2
AA112	**109134**	0.80	114.1	BB105	**109143**	1.40	107.9	BB225		3.00	226.4	CC180	**109165**	4.00	184.2
AA120	**109135**	0.90	122.1	BB107	**109214**	1.71	109.9	BB226	**109203**	3.00	227.4	CC195	**109166**	4.30	199.2
AA128	**109136**	0.90	130.1	BB108	**109215**	1.74	110.9	BB228	**109204**	3.00	229.4	CC210	**109167**	4.70	214.2
BB-BELTS				BB111	**109200**	1.40	113.9	BB230	**109205**	3.10	231.4	CC225		5.20	229.2
BB42	**109192**	0.60	44.9	BB112	**109144**	1.60	114.9	BB240	**109150**	3.20	241.4	CC240	**109168**	5.20	242.2
BB43	**109193**	0.60	45.9	BB116	**109216**	1.60	118.9	BB250		3.20	251.4	CC255		5.90	259.2
BB45	**109206**	0.60	47.9	BB117		1.60	119.9	BB267		3.20	268.4	CC270	**109169**	5.90	272.2
BB51	**109088**	0.80	53.9	BB118	**109218**	1.90	120.9	BB270	**109151**	3.60	271.4	CC300	**109170**	6.50	302.2
BB53		0.80	55.9	BB120	**109145**	1.60	122.9	BB273		3.60	274.4	CC330	**109171**	7.20	332.2
BB54		0.80	56.9	BB122		1.70	124.9	BB277		3.60	278.4	CC360	**109172**	7.80	362.2
BB55	**109089**	0.80	57.9	BB123	**109219**	1.70	125.9	BB278		3.70	279.4	CC390	**109189**	8.50	392.2
BB60	**109090**	0.90	62.9	BB124	**109220**	1.70	126.9	BB285		3.90	286.4	CC420	**109188**	9.10	422.2
BB64		0.90	66.9	BB128	**109146**	1.80	130.9	BB300		4.00	301.4				
BB68	**109137**	0.90	70.9	BB129	**109221**	1.80	131.9	BB360		4.50	3614				
BB71	**109196**	1.00	73.9	BB130	**109222**	1.80	132.9								
BB72	**109208**	1.17	74.9	BB136	**109201**	1.80	138.9								

SELECTION

FLEXLINK Belting

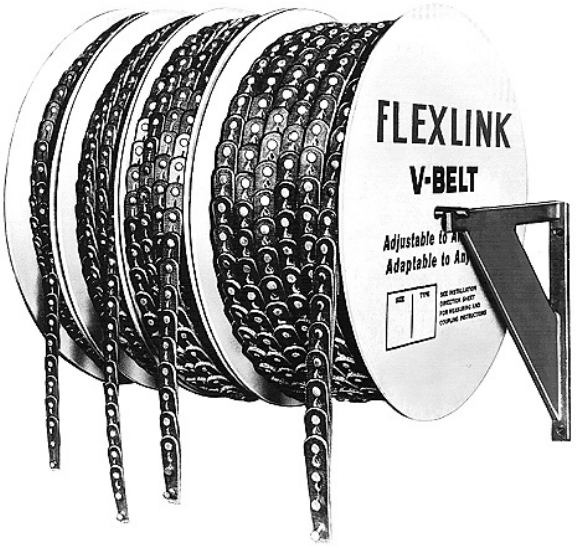

Belt Selection	Belt Width	Min. Recommended Sheave Pitch Dia.	Part No. Per Foot*	Wt. Per Ft.
0/3L	3/8	2”	**109076**	.14
A/4L	1/2	2”	**109084**	.15
B/5L	21/32	4”	**109085**	.19
C	7/8	6”	**109086**	.35

* 100 Ft reel available

FLEXLINK BELT APPLICATION GUIDELINES

1. To obtain link belt length, multiply desired pitch length by .916. This provides correct belt length for initial run-in and seating of belt.
2. For matched sets of link belts, use the same number of links on each belt.
3. Do not use link belting above 5000 FPM belt speed.
   Belt speed = .262 x RPM x pitch diameter of sheave.
4. **Note:** Link belting is not static conducting.
   Important -
   For matched sets of link belts use same number of links on each belt.

- Fast installation, installs in a snap
- Adjustable to any length, adaptable to any drive
- Reduces vibration
- Long-lasting construction
- Reduces inventory - one reel can replace many sizes of standard belting
- Oil proof construction
- Order by the foot or by the reel.

DODGE®

FHP Belts

- Oil Resistant
- Static Conducting
- For Fractional HP Single Drive Belts
- Belt Number Indicates Pi8tch Length (eg 4L270 = 27”)

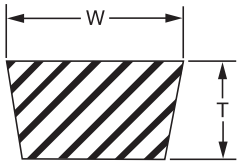

Belt Sect.	W	T
3L	3/8	7/32
4L	1/2	5/16
5L	21/32	3/8

3L, 4L, 5L FHP Belts

Belt No.	Part No.	Wt.
3L BELTS		
3L150	**108150**	.05
3L160	**108151**	.05
3L170	**108152**	.05
3L180	**108153**	.06
3L190	**108154**	.06
3L200	**108155**	.06
3L210	**108156**	.06
3L220	**108157**	.07
3L230	**108158**	.07
3L240	**108159**	.07
3L250	**108160**	.08
3L260	**108161**	.08
3L270	**108162**	.08
3L280	**108163**	.09
3L290	**108164**	.09
3L300	**108165**	.09
3L310	**108166**	.10
3L320	**108167**	.10
3L330	**108168**	.10
3L340	**108169**	.10
3L350	**108170**	.11
3L360	**108171**	.11
3L370	**108172**	.11
3L380	**108173**	.12
3L390	**108174**	.12
3L400	**108175**	.12
3L410	**108176**	.13
3L420	**108177**	.13
3L430	**108178**	.13
3L440	**108179**	.14
3L450	**108180**	.14
3L460	**108181**	.14
3L470	**108182**	.15
3L480	**108183**	.15
3L490	**108184**	.15
3L500	**108185**	.15
3L510	**108186**	.16
3L520	**108187**	.16
3L530	**108188**	.16
3L540	**108189**	.17
3L550	**108190**	.17
3L560	**108191**	.17
3L570	**108192**	.18
3L580	**108193**	.18
3L590	**108194**	.18
3L600	**108195**	.19
3L610	**108196**	.19

Belt No.	Part No.	Wt.
3L BELTS (CON’T)		
3L620	**108604**	.19
3L630	**108805**	.19
4L BELTS		
4L170	**108614**	.09
4L180	**108001**	.09
4L188	**108836**	.09
4L190	**108002**	.10
4L200	**108003**	.10
4L210	**108004**	.11
4l220	**108005**	.11
4L230	**108006**	.12
4L240	**108007**	.12
4L250	**108008**	.13
4L260	**108009**	.13
4L270	**108010**	.14
4L275	**108841**	.14
4L280	**108011**	.15
4L290	**108012**	.16
4L300	**108013**	.16
4L310	**108014**	.17
4L320	**108015**	.18
4L330	**108016**	.18
4L340	**108018**	.19
4L350	**108019**	.19
4L360	**108020**	.20
4L370	**108021**	.20
4L380	**108022**	.21
4L390	**108023**	.21
4L400	**108024**	.22
4L410	**108025**	.23
4L420	**108026**	.23
4L430	**108027**	.24
4L440	**108028**	.24
4L450	**108029**	.25
4L460	**108030**	.25
4L470	**108031**	.26
4L480	**108032**	.26
4L490	**108033**	.27
4L500	**108034**	.27
4L510	**108035**	.28
4L520	**108036**	.29
4L530	**108037**	.29
4L540	**108038**	.30
4L550	**108039**	.30
4L560	**108040**	.31
4L570	**108041**	.31
4L580	**108042**	.32

Belt No.	Part No.	Wt.
4L BELTS (CON’T.)		
4L590	**108043**	.32
4L600	**108044**	.33
4L610	**108045**	.33
4L620	**108046**	.34
4L630	**108047**	.35
4L640	**108048**	.35
4L650	**108049**	.36
4L660	**108050**	.36
4L670	**108051**	.37
4L680	**108052**	.37
4L690	**108053**	.38
4L700	**108054**	.38
4L710	**108055**	.39
4L720	**108056**	.40
4L730	**108057**	.40
4L740	**108058**	.41
4L750	**108059**	.41
4L760	**108060**	.42
4L770	**108061**	.42
4L780	**108062**	.43
4L790	**108063**	.43
4L800	**108064**	.44
4L810	**108615**	.44
4L820	**108065**	.45
4L830	**108616**	.46
4L840	**108066**	.46
4L850	**108617**	.47
5L BELTS		
5L230	**108625**	.21
5L240	**108080**	.20
5L250	**108081**	.20
5L260	**108082**	.20
5L265	**108070**	.21
5L270	**108083**	.21
5L280	**108084**	.22
5L290	**108085**	.23
5L300	**108086**	.24
5L310	**108087**	.24
5L320	**108088**	.25
5L330	**108089**	.26
5L340	**108090**	.27
5L350	**108091**	.28
5L360	**108092**	.28
5L365	**108872**	.29
5L370	**108093**	.29
5L380	**108094**	.37
5L390	**108095**	.37

Belt No.	Part No.	Wt.
5L BELTS (CON’T.)		
5L400	**108096**	.38
5L410	**108097**	.38
5L420	**108098**	.40
5L430	**108099**	.41
5L440	**108100**	.42
5L450	**108101**	.43
5L460	**108102**	.44
5L470	**108103**	.45
5L480	**108104**	.46
5L490	**108105**	.47
5L500	**108106**	.48
5L510	**108107**	.49
5L520	**108108**	.50
5L530	**108109**	.51
5L540	**108110**	.52
5L550	**108111**	.53
5L560	**108112**	.54
5L570	**108113**	.55
5L575	**108873**	.55
5L580	**108114**	.56
5L590	**108115**	.57
5L600	**108116**	.58
5L610	**108117**	.59
5L620	**108118**	.60
5L630	**108119**	.61
5L640	**108120**	.61
5L650	**108121**	.62
5L660	**108122**	.63
5L670	**108123**	.64
5L680	**108124**	.65
5L690	**108125**	.66
5L700	**108126**	.67
5L710	**108127**	.68
5L720	**108128**	.69
5L730	**108129**	.70
5L740	**108130**	.71
5L750	**108131**	.72
5L760	**108132**	.73
5L770	**108133**	.74
5L780	**108134**	.75
5L790	**108826**	.76
5L800	**108135**	.77
5L810	**108827**	.78
5L820	**108136**	.79
5L830	**108328**	.80
5L840	**108137**	.81
5L850	**108629**	.82

SELECTION

Stock D-V Wedge Drives: Standard Motor Speeds

Step 1 - Determine Service Factor. Refer to Typical Service Factors, Table 2. Locate type of Driven and Driver equipment. (If an idler is used, increase the factor by value indicated.) Correct factor is determined by: 1. The extent and frequency of peak loads. 2. Number of operating hours/year (broken down in average hours/ day of continuous service). 3. Proper service category (Intermittent, Normal or Continuous). Select the one closest to the application conditions.

Step 2 - Compute Design HP. Multiply normal running HP required or nameplate rating by service factor obtained in Step 1.

Step 3 - Choose Belt Section. Using Table 1, below, read up from design hp figure obtained in Step 2 and over from the rpm of faster shaft. This intersection indicates belt section.

Step 4 - Select the Drive. a). Using belt section from Step 3, refer to Stock Drive Selection Tables beginning on page PT7-48. **b**). Under appropriate driver speed column find Driven RPM nearest to the desired speed. To the right note HP per Belt. Read left for Driver/Driven Sheave information. (If driver is an electric motor be sure motor sheave diameter is not less than shown in Table 3.) **c**). Read onto opposite page and find figure nearest the required center distance. Note Arc-Length Correction Factor in the shaded row below the C.D. figure. **d**). Read to the top of the table for the belt size. **e**). To determine number of belts, multiply the HP per Belt value by the ArcLength Correction Factor. This is the corrected HP/belt. Divide design HP by corrected HP figure to determine number of belts required.

EXAMPLE OF SELECTION

Select a D-V Wedge drive for a positive blower, with a 2-15/16" shaft, to run @ 290 rpm, driven by a 30 hp, 1160 squirrel cage electric motor with a 2-1/8" shaft. Desired center distance is 26". Service is continuous.

Step 1 - Service factor from Table 2 is 1.4.

Step 2 - Design HP = 1.4x30 = 42 HP.

Step 3 - A 5V belt section is shown in Table 1 when reading to the right of 1160 rpm and up from 42 design HP.

Step 4 - Turn to 5V Stock Drive Selection Tables. On page PT7-86, under 1160 RPM Driver, read down to find 290 rpm. The nearest appears as 291.

Note HP/belt as 12.8 for all D-V and Polyband belts over 200" and 15.4 for Polyband belts under 200". Also note sheaves listed as 7.1 Driver, 28.0 Driven. Table 3 shows driver is not undersize. Reading toward the right the C.D. figure nearest 26, is 26.4. The correction factor below the C.D. figure is .92. Top of table shows belt size as 5VX 1120.

The HP/belt for D-V is 15.4. This value x the .92 factor = 14.2 corrected hp/belt. 42 HP÷14.20 = 2.96. Going to the next whole number, drive requires 3 belts. (Center to center operating distance is 26.4 nominal.)

Order: 1. 3-5VX 1120 D-V belts. **2.** 1 - 3/5V7.1-2517 TAPER-LOCK Sheave. **3.** 1 - 2-1/8, bore 2517 bushing.

4. 1 - 3/5V28.0-3535 TAPER-LOCK Sheave. 5. 1 - 2-15/16, bore 3535 bushing.

Table 1 - Narrow Cross Section Selection Chart

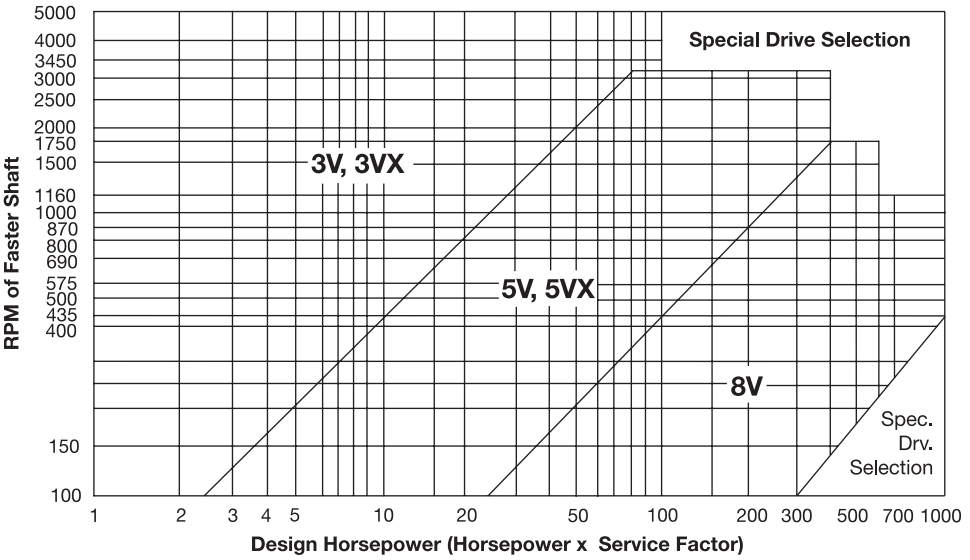

NOTE: Selection program VIA-VISA available at www.ptwizard.com.

Service Factor

Table 2 - Typical Service Factors

Driven Machine Types Note: Certain machines may require flywheel sheaves or special construction to withstand heavy shock loads. Consult Mfg'r.	Driver: Normal Torque NEMA Des. A or B Motors DC Shunt Wound Motors Multi-Cylinder Engines			Driver: High Torque NEMA Des. C or D Motors DC Series Wound Motors Single Cylinder Engines			
	Service*			Service*			
	Intermit.	Normal	Contin.	Intermit.	Normal	Cont.	
Agitators for Liquids Blowers and Exhausters Centrif. Pumps, Compressors Fans up to 10HP Light Duty Conveyors	**1.0**	**1.1**	**1.2**	**1.1**	**1.2**	**1.3**	*** Note:** Intermittent: Up to 6 Hrs./Day Normal: 6-16 Hrs./Day Continuous: 16-24 Hrs./Day Adder for Idlers: Outside on slack side . . . . . 0.1 Inside on tight side . . . . . 0.1 Outside on tight side 0.2
Belt Conveyors, Bulk Mat'l Dough Mixers Fans over 10 HP Generators Line Shafts Laundry Machinery Machine Tools Punches, Presses, Shears Printing Machinery Positive Displ. Rotary Pumps Revolving & Vibrating Screens	**1.1**	**1.2**	**1.3**	**1.2**	**1.3**	**1.4**	
Brick Machinery Bucket Elevators Exciters Piston Compressors Conveyors: Drag, Pan, Screw Paper Mill Beaters Piston Pumps Pos. Displacement Blowers Pulverizers Saw Mill, Woodworking Mach'y Textile Machinery	**1.2**	**1.3**	**1.4**	**1.4**	**1.5**	**1.6**	
Crushers: Gyratory, Jaw, Roll Mills: Ball, Rod, Tube Hoists Rubber Calendars, Extruders, Mills	**1.3**	**1.4**	**1.5**	**1.6**	**1.7**	**1.8**	
Chokable Equipment, Fire Hazard	**2.0**	**2.0**	**2.0**	**2.0**	**2.0**	**2.0**	

Table 3 - NEMA Min. Sheave Dia. for D-V Wedge Drives

Motor		Motor Horsepower																								
RPM	Sheave	1/2	3/4	1	1-1/2	2	3	5	7-1/2	10	15	20	25	30	40	50	60	75	100	125	150	200	250	300	350	400
870	Min O.D.	2.2	2.4	2.4	2.4	3.0	3.0	3.8	4.4	5.2	6.0	6.8	6.8	6.8	8.2	8.4	10.0	9.5	12.0	12.5	13.2	13.2	15.0	. . .	. . .	. . .
	Max F.W.	2.3	2.3	2.8	2.8	3.4	3.4	4.0	4.0	4.7	4.7	5.3	5.3	5.9	5.9	7.3	7.3	8.5	8.5	8.5	11.6	11.6	11.6	. . .	. . .	. . .
1160	Min O.D.	. . .	2.2	2.4	2.4	2.4	3.0	3.0	3.8	4.4	4.4	5.2	6.0	6.8	6.8	8.2	9.0	10.0	10.0	12.0	13.2	13.2	13.2	15.0	14.1	. . .
	Max F.W.	. . .	2.3	2.3	2.8	2.8	3.4	3.4	4.0	4.0	4.7	4.7	5.3	5.3	5.9	5.9	7.3	7.3	8.5	8.5	8.5	11.6	11.6	11.6	11.6	. . .
1750	Min O.D.	. . .	. . .	2.2	2.4	2.4	2.4	3.0	3.0	3.8	4.4	4.4	4.4	5.2	6.0	6.8	7.4	8.6	8.6	10.5	10.5	13.2	13.2	13.2	13.2	14.1
	Max F.W.	. . .	. . .	2.3	2.3	2.3	2.8	2.8	3.4	3.4	4.0	4.0	4.7	4.7	5.3	5.3	5.9	5.9	7.3	7.3	8.5	9.4	9.4	11.6	11.6	11.6
3500	Min O.D.	. . .	. . .	. . .	2.2	2.4	2.4	3.0	3.8	4.4	4.4	. . .	. . .	. . .	. . .	. . .	. . .	. . .	. . .	. . .	. . .	. . .	. . .	. . .	. . .	. . .
	Max F.W.	. . .	. . .	. . .	2.3	2.3	2.8	2.8	3.4	4.0	4.0	. . .	. . .	. . .	. . .	. . .	. . .	. . .	. . .	. . .	. . .	. . .	. . .	. . .	. . .	. . .

Data in unshaded area is per NEMA Standard MG1-14.42

Data in shaded area subject to approval of motor manufacturer

F.W. = Face Width of sheave

NOTE: Selection program VIA-VISA available at www.ptwizard.com.

SELECTION

Stock D-V Wedge Drives: Non-Standard Motor Speeds & Speed-Up Drives.

For Speeds Other Than Standard Motor Speeds:

Step 1 - Determine Speed Ratio = $\left(\frac{\text{Driver RPM}}{\text{Driven RPM}}\right)$

Step 2 - Compute Design HP. Multiply normal running HP required or nameplate rating by service factor from Table 2.

Step 3 - Determine Maximum Diameter of Driver Sheave

@ 6500 FPM : O.D. = $\frac{6500 \text{ FPM}}{0.262^* \text{ RPM}}$

Step 4 - Select Belt Cross Section. Using Table 1, read up from design HP figure obtained in Step 2 and over from the RPM of faster shaft. This intersection indicates belt section.

Step 5 - Select Drive. Using the belt section from Step 4, make a tentative sheave selection from **stock drive tables**. (Note that several choices are available in the ratio obtained from Step 1. Other choices close to this ratio may also produce a functional drive.) Read onto opposite page and find figure nearest the required center distance. The Arc-Length correction factor is listed in the shaded row below the C.D. figure. Read to the top of the table for the belt size.

Step 6 - Size the Drive. From basic horsepower tables locate HP rating at intersection of RPM of faster shaft row and small sheave column. To this, add the "additional HP" figure based on drive ratio. This becomes the rated HP. Multiply this sum by the arc-length correction factor noted in Step 5. This becomes the corrected HP per belt. To find

Required number of belts : $\frac{\text{Design HP}}{\text{Correction HP/Belt}}$

EXAMPLE OF SELECTION

A V-drive is needed for a 30 HP 2200 RPM gasoline engine, with a 2-1/4" dia. shaft, driving a generator, with a 2-7/16" dia. shaft, @ 1800 RPM. It runs 8 hrs. a day. Center distance is 31".

Step 1 - Speed Ratio = $\frac{2200}{1785}$ = 1.23

Step 2 - Service Factor = 1.2 Design HP = 30 x 1.2 = 36

Step 3 - Driver Sheave Max. Dia. = $\frac{6500}{.262 \times 2200}$ = 11.3

Step 4 - Belt Cross Section = Table 1 indicates 3VX.

Step 5 - In 3VX Stock Drive Selection Tables on pages PT7-66 and PT7-67, find the 1.23 ratio obtained in the Step 1 calculation. At the top of page PT7-64, the most economical drive is shown as 6.5 Driver, 8.0 Driven. The C.D. nearest 31" is 31.1. The correction factor below the C.D. figure is 1.05. Top of the column shows a 3VX850 belt. Refer to Basic HP Tables on page PT7-80 and PT7-81. From the 2200 RPM of faster shaft row and down from the 6.5 smaller sheave heading: 10.2 HP/belt plus an additional hp of .23 in the 1.19 thru 1.26 ratio column. The sum = 10.43 HP/belt x 1.05 arc length correction factor = 10.95 HP/belt.

Number of belts = $\frac{36}{10.95}$ = 3.28 or 4 belts

Order: 1- 4 groove 3V 6.5 TAPER-LOCK Sheave, 1-2517 2-1/4" bore bushing, 1-4 groove 8.0 TAPER-LOCK Sheave, 1-2517 2-7/16" bore bushing, 4-3VX850 D-V Wedge Belts.

Example of a 3V Speed-Up Drive

A 20 HP 1750 RPM AC motor, with a 1-5/8" dia. shaft, is to drive a blower, with a 1-7/16" shaft, @ 2500 RPM. The center distance = 26". Equipment runs 24 hrs./day.

1. Service Factor from Table 2 is 1.2.
2. Design HP=20x1.2=24 HP
3. Speed Ratio = $\frac{2500}{1750}$ = 1.43
4. In Stock Drive Table, under 1.43 ratio, sheaves are listed as 5.6 Driver/8.0 Driven. (In a speed-up drive, the 5.6 sheave becomes the Driven, the 8.0 the Driver.) The opposite page of the table shows the closest center distance as 26.8 with an arc correction factor of 1.03. Belt shown at top of column is 3VX750.
5. From Basic Horsepower Tables a 5.6 sheave @ 2500 RPM = (9.46 + .37) = 9.83. 9.83 X 1.03 arc length correction factor = 10.12 corrected HP/belt.
6. Number of Belts = $\frac{\text{Design HP}}{\text{Corrected HP}}$ = $\frac{24}{10.12}$ = 2.37 or 3 belts.
7. Order: 1-3 groove 3V 8.0 TAPER-LOCK Sheave, 1-15/8" bore 2517 bushing, 1-3 groove 3V 5.6 TAPER-LOCK Sheave, 1-17/16" bore 1610 bushing, 3-3VX750 D-V belts.

NOTE: Selection program VIA-VISA available at www.ptwizard.com.

Table 4 - Narrow Belt Length Correction Factors

Belt Lgth. *	Factor for Belts: 3VX	5V, 5VX	8V, 8VX	Belt Lgth.	Factor for Belts: 3VX	5V, 5VX	8V, 8VX
25	.83	...	...	118	1.12	.99	.89
26.5	.84	...	...	125	1.13	1.00	.90
28	.85	...	...	132	1.14	1.01	.91
30	.86	...	...	140	1.15	1.02	.92
31.5	.87	...	...	150	1.16	1.03	.93
33.5	.88	...	...	160	...	1.04	.94
35.5	.89	..	...	170	...	1.05	.94
37.5	.90	..	...	180	...	1.06	.95
40	.92	...	...	190	...	1.07	.96
42.5	.93	...	...	200	...	1.08	.97
45	.94	...	...	212	...	1.09	.98
47.5	.95	...	...	224	...	1.09	.98
50	.96	.85	...	236	...	1.10	.99
53	.97	.86	...	250	...	1.11	1.00
56	.98	.87	...	265	...	1.12	1.01
60	.99	.88	...	280	...	1.13	1.02
63	1.00	.89	...	300	...	1.14	1.03
67	1.01	.90	...	315	...	1.15	1.03
71	1.02	.91	...	335	...	1.16	1.04
75	1.03	.92	...	355	...	1.17	1.05
80	1.04	.93	...	375	...	...	1.06
85	1.06	.94	...	400	...	...	1.07
90	1.07	.95	...	425	...	...	1.08
95	1.08	.96	...	450	...	..	1.09
100	1.09	.96	.87	475	...	...	1.09
106	1.10	.97	.88	500	...	...	1.10
112	1.11	.98	.88	560	...	...	1.11

* Outside circumference in inches

Table 5 - Arc Correction Factors

D-d ‡ / C	Approx. Arc of Contact on Small Shv.	Factor
.00	180°	1.00
.10	174°	.99
.20	169°	.97
.30	163°	.96
.40	157°	.94
.50	151°	.93
.60	145°	.91
.70	139°	.89
.80	133°	.87
.90	127°	.85
1.00	120°	.82
1.10	113°	.80
1.20	106°	.77
1.30	99°	.73
1.40	91°	.70
1.50	83°	.65

‡ D = Dia. of large sheave
d = Dia. of small sheave
C = Center distance

NOTE: To determine required belt length when center distance and sheave diameters are known, use the following formula.

$$L = 2C + 1.57\,(D + d) + \frac{(D - d)^2}{4c}$$

NOTE: Selection program VIA-VISA available at www.ptwizard.com.

SELECTION

DODGE®

3VX STOCK DRIVE SELECTIONS

Speed Ratio	Stock Sheaves Diameter Driver	Stock Sheaves Diameter Driven	3500 RPM Driver Driven RPM	3500 RPM Driver HP/Belt 3VX	1750 RPM Driver Driven RPM	1750 RPM Driver HP/Belt 3VX	1160 RPM Driver Driven RPM	1160 RPM Driver HP/Belt 3VX	Belt Number and Approx. Center Distance 3VX 250	3VX 265	3VX 280	3VX 300	3VX 315	3VX 335	3VX 355	3VX 375
1.00	2.65	2.65	3500	3.78	1750	2.15	1160	1.52	8.3	9.1	9.8	10.8	11.6	12.6	13.6	14.6
	2.80	2.80	3500	4.25	1750	2.41	1160	1.69	8.1	8.9	9.6	10.6	11.4	12.4	13.4	14.4
	3.00	3.00	3500	4.88	1750	2.75	1160	1.93	7.8	8.5	9.3	10.3	11.0	12.0	13.0	14.0
	3.15	3.15	3500	5.34	1750	3.01	1160	2.10	7.6	8.3	9.1	10.1	10.8	11.8	12.8	13.8
	3.35	3.35	3500	5.96	1750	3.34	1160	2.34	7.2	8.0	8.7	9.7	10.5	11.5	12.5	13.5
	3.65	3.65	3500	6.86	1750	3.85	1160	2.68	6.8	7.5	8.3	9.3	10.0	11.0	12.0	13.0
	4.12	4.12	3500	8.24	1750	4.63	1160	3.22	6.0	6.8	7.5	8.5	9.3	10.3	11.3	12.3
	4.50	4.50	3500	9.32	1750	5.25	1160	3.65	...	6.2	6.9	7.9	8.7	9.7	10.7	11.7
	4.75	4.75	3500	10.01	1750	5.65	1160	3.93	...	5.8	6.5	7.5	8.3	9.3	10.3	11.3
	5.00	5.00	3500	10.68	1750	6.06	1160	4.21	...	...	6.2	7.2	7.9	8.9	9.9	10.9
	5.30	5.30	3500	11.48	1750	6.53	1160	4.55	...	...	...	6.7	7.4	8.4	9.4	10.4
	5.60	5.60	3500	12.25	1750	7.01	1160	4.88	...	...	...	...	7.0	8.0	9.0	10.0
	6.00	6.00	3500	13.24	1750	7.63	1160	5.32	...	...	...	..	...	7.3	8.3	9.3
	6.50	6.50	3500	14.41	1750	8.40	1160	5.87	...	...	...	..	...	...	7.5	8.5
	6.90	6.90	3500	15.30	1750	9.01	1160	6.30	...	...	...	..	...	...	...	7.9
	8.00	8.00	3500	17.48	1750	10.64	1160	7.47	...	...	...	...	..	...	...	...
	10.60	10.60	3500	20.91	1750	14.22	1160	10.13	...	...	...	...	...	...	...	...
1.05	3.00	3.15	3331	5.00	1665	2.81	1104	1.97	7.7	8.4	9.2	10.2	10.9	11.9	12.9	13.9
	4.75	5.00	3323	10.13	1662	5.72	1101	3.97	...	...	6.3	7.3	8.1	9.1	10.1	11.1
1.06	2.65	2.80	3309	3.91	1655	2.22	1097	1.56	8.2	9.0	9.7	10.7	11.5	12.5	13.5	14.5
	3.15	3.35	3288	5.49	1644	3.08	1090	2.15	7.4	8.1	8.9	9.9	10.6	11.6	12.6	13.6
	4.50	4.75	3314	9.45	1657	5.31	1098	3.70	...	6.0	6.7	7.7	8.5	9.5	10.5	11.5
	5.00	5.30	3300	10.82	1650	6.13	1094	4.26	...	...	...	6.9	7.7	8.7	9.7	10.7
	5.30	5.60	3311	11.61	1655	6.60	1097	4.59	...	...	...	...	7.2	8.2	9.2	10.2
	6.50	6.90	3296	14.55	1648	8.48	1092	5.91	...	...	...	...	...	...	...	8.2
1.07	2.80	3.00	3263	4.42	1631	2.49	1081	1.75	7.9	8.7	9.4	10.4	11.2	12.2	13.2	14.2
	5.60	6.00	3265	12.41	1632	7.09	1082	4.93	...	...	...	...	...	7.6	8.6	9.6
1.08	6.00	6.50	3229	13.42	1614	7.73	1070	5.38	...	...	...	..	...	...	7.9	8.9
1.09	3.35	3.65	3208	6.15	1604	3.44	1063	2.40	7.0	7.8	8.5	9.5	10.3	11.3	12.3	13.3
	4.12	4.50	3201	8.44	1601	4.73	1061	3.29	5.7	6.5	7.2	8.2	9.0	10.0	11.0	12.0
ARC-LENGTH CORRECTION FACTOR —>									**.83**	**.84**	**.85**	**.86**	**.87**	**.88**	**.89**	**.90**
1.11	4.50	5.00	3146	9.55	1573	5.36	1043	3.73	...	5.8	6.5	7.5	8.3	9.3	10.3	11.3
1.12	3.00	3.35	3129	5.12	1564	2.87	1037	2.01	7.5	8.3	9.0	10.0	10.8	11.8	12.8	13.8
	4.75	5.30	3133	10.24	1567	5.77	1038	4.01	...	...	6.1	7.1	7.9	8.9	9.9	10.9
	5.00	5.60	3122	10.93	1561	6.18	1035	4.29	...	...	...	6.7	7.4	8.4	9.4	10.4
1.13	2.65	3.00	3085	4.04	1542	2.28	1022	1.60	8.1	8.8	9.6	10.6	11.3	12.3	13.3	14.3
	2.80	3.15	3105	4.50	1552	2.53	1029	1.78	7.8	8.6	9.3	10.3	11.1	12.1	13.1	14.1
	3.65	4.12	3096	7.12	1548	3.98	1026	2.77	6.4	7.1	7.9	8.9	9.6	10.6	11.6	12.6
	5.30	6.00	3088	11.74	1544	6.66	1024	4.63	...	...	..	...	6.9	7.9	8.9	9.9
1.15	4.12	4.75	3031	8.53	1515	4.77	1005	3.32	..	6.3	7.0	8.0	8.8	9.8	10.8	11.8
	6.00	6.90	3040	13.52	1520	7.78	1008	5.41	...	...	..	...	...	...	7.6	8.6
1.16	3.15	3.65	3014	5.64	1507	3.15	999	2.20	7.2	7.9	8.7	9.7	10.4	11.4	12.4	13.4
	5.60	6.50	3012	12.54	1506	7.16	998	4.98	...	...	...	...	...	7.2	8.2	9.2
	6.90	8.00	3016	15.59	1508	9.16	999	6.40	...	...	..	...	...	...	...	...
1.18	4.50	5.30	2967	9.63	1483	5.41	983	3.76	...	...	6.3	7.3	8.0	9.0	10.0	11.0
	4.75	5.60	2964	10.33	1482	5.81	982	4.04	...	...	...	6.9	7.6	8.6	9.6	10.6
1.19	2.65	3.15	2935	4.11	1468	2.32	973	1.63	7.9	8.7	9.4	10.4	11.2	12.2	13.2	14.2
1.20	2.80	3.35	2917	4.59	1458	2.58	967	1.81	7.7	8.4	9.2	10.2	10.9	11.9	12.9	13.9
	5.00	6.00	2912	11.03	1456	6.23	965	4.33	...	...	...	...	7.1	8.1	9.1	10.1
1.22	3.00	3.65	2868	5.24	1434	2.93	951	2.05	7.3	8.0	8.8	9.8	10.5	11.5	12.5	13.5
	4.12	5.00	2878	8.59	1439	4.80	954	3.34	...	6.1	6.8	7.8	8.6	9.6	10.6	11.6

Arc & Length Factors are approximate values
Refer to Selection Procedure for more precise values

NOTE: Selection program VIA-VISA available at www.ptwizard.com.

DODGE®

3VX STOCK DRIVE SELECTIONS

Speed Ratio	Belt Number and Approx. Center Distance																							
	3VX 400	3VX 425	3VX 450	3VX 475	3VX 500	3VX 530	3VX 560	3VX 600	3VX 630	3VX 670	3VX 710	3VX 750	3VX 800	3VX 850	3VX 900	3VX 950	3VX 1000	3VX 1060	3VX 1120	3VX 1180	3VX 1250	3VX 1320	3VX 1400	3VX 1500
1.00	15.8	17.1	18.3	19.6	20.8	22.3	23.8	25.8	27.3	29.3	31.3	33.3	35.8	38.3	40.8	43.3	45.8	48.8	51.8	55	58	62	66	71
	15.6	16.9	18.1	19.4	20.6	22.1	23.6	25.6	27.1	29.1	31.1	33.1	35.6	38.1	40.6	43.1	45.6	48.6	51.6	55	58	62	66	71
	15.3	16.5	17.8	19.0	20.3	21.8	23.3	25.3	26.8	28.8	30.8	32.8	35.3	37.8	40.3	42.8	45.3	48.3	51.3	54	58	61	65	70
	15.1	16.3	17.6	18.8	20.1	21.6	23.1	25.1	26.6	28.6	30.6	32.6	35.1	37.6	40.1	42.6	45.1	48.1	51.1	54	58	61	65	70
	14.7	16.0	17.2	18.5	19.7	21.2	22.7	24.7	26.2	28.2	30.2	32.2	34.7	37.2	39.7	42.2	44.7	47.7	50.7	54	57	61	65	70
	14.3	15.5	16.8	18.0	19.3	20.8	22.3	24.3	25.8	27.8	29.8	31.8	34.3	36.8	39.3	41.8	44.3	47.3	50.3	53	57	60	64	69
	13.5	14.8	16.0	17.3	18.5	20.0	21.5	23.5	25.0	27.0	29.0	31.0	33.5	36.0	38.5	41.0	43.5	46.5	49.5	53	56	60	64	69
	12.9	14.2	15.4	16.7	17.9	19.4	20.9	22.9	24.4	26.4	28.4	30.4	32.9	35.4	37.9	40.4	42.9	45.9	48.9	52	55	59	63	68
	12.5	13.8	15.0	16.3	17.5	19.0	20.5	22.5	24.0	26.0	28.0	30.0	32.5	35.0	37.5	40.0	42.5	45.5	48.5	52	55	59	63	68
	12.2	13.4	14.7	15.9	17.2	18.7	20.2	22.2	23.7	25.7	27.7	29.7	32.2	34.7	37.2	39.7	42.2	45.2	48.2	51	55	58	62	67
	11.7	12.9	14.2	15.4	16.7	18.2	19.7	21.7	23.2	25.2	27.2	29.2	31.7	34.2	36.7	39.2	41.7	44.7	47.7	51	54	58	62	67
	11.2	12.5	13.7	15.0	16.2	17.7	19.2	21.2	22.7	24.7	26.7	28.7	31.2	33.7	36.2	38.7	41.2	44.2	47.2	50	54	57	61	66
	10.6	11.8	13.1	14.3	15.6	17.1	18.6	20.6	22.1	24.1	26.1	28.1	30.6	33.1	35.6	38.1	40.6	43.6	46.6	50	53	57	61	66
	9.8	11.0	12.3	13.5	14.8	16.3	17.8	19.8	21.3	23.3	25.3	27.3	29.8	32.3	34.8	37.3	39.8	42.8	45.8	49	52	56	60	65
	9.2	10.4	11.7	12.9	14.2	15.7	17.2	19.2	20.7	22.7	24.7	26.7	29.2	31.7	34.2	36.7	39.2	42.2	45.2	48	52	55	59	64
	...	...	9.9	11.2	12.4	13.9	15.4	17.4	18.9	20.9	22.9	24.9	27.4	29.9	32.4	34.9	37.4	40.4	43.4	46	50	53	57	62
	...	...	...	...	...	...	...	13.4	14.9	16.9	18.9	20.9	23.4	25.9	28.4	30.9	33.4	36.4	39.4	42	46	49	53	58
1.05	15.2	16.4	17.7	18.9	20.2	21.7	23.2	25.2	26.7	28.7	30.7	32.7	35.2	37.7	40.2	42.7	45.2	48.2	51.2	54	58	61	65	70
	12.3	13.6	14.8	16.1	17.3	18.8	20.3	22.3	23.8	25.8	27.8	29.8	32.3	34.8	37.3	39.8	42.3	45.3	48.3	51	55	58	62	67
1.06	15.7	17.0	18.2	19.5	20.7	22.2	23.7	25.7	27.2	29.2	31.2	33.2	35.7	38.2	40.7	43.2	45.7	48.7	51.7	55	58	62	66	71
	14.9	16.1	17.4	18.6	19.9	21.4	22.9	24.9	26.4	28.4	30.4	32.4	34.9	37.4	39.9	42.4	44.9	47.9	50.9	54	57	61	65	70
	12.7	14.0	15.2	16.5	17.7	19.2	20.7	22.7	24.2	26.2	28.2	30.2	32.7	35.2	37.7	40.2	42.7	45.7	48.7	52	55	59	63	68
	11.9	13.2	14.4	15.7	16.9	18.4	19.9	21.9	23.4	25.4	27.4	29.4	31.9	34.4	36.9	39.4	41.9	44.9	47.9	51	54	58	62	67
	11.4	12.7	13.9	15.2	16.4	17.9	19.4	21.4	22.9	24.9	26.9	28.9	31.4	33.9	36.4	38.9	41.4	44.4	47.4	50	54	57	61	66
	9.5	10.7	12.0	13.2	14.5	16.0	17.5	19.5	2.10	23.0	25.0	27.0	29.5	32.0	34.5	37.0	39.5	42.5	45.5	48	52	55	59	64
1.07	15.4	16.7	17.9	19.2	20.4	21.9	23.4	25.4	26.9	28.9	30.9	32.9	35.4	37.9	40.4	42.9	45.5	48.4	51.4	54	58	61	65	70
	10.9	12.1	13.4	14.6	15.9	17.4	18.9	20.9	22.4	24.4	26.4	28.4	30.9	33.4	35.9	38.4	40.9	43.9	46.9	50	53	57	61	66
1.08	10.2	11.4	12.7	13.9	15.2	16.7	18.2	20.2	21.7	23.7	25.7	27.7	30.2	32.7	35.2	37.7	40.2	43.2	46.2	49	53	56	60	65
1.09	14.5	15.8	17.0	18.3	19.5	21.0	22.5	24.5	26.0	28.0	30.0	32.0	34.5	37.0	39.5	42.0	44.5	47.5	50.5	54	57	61	65	70
	13.2	14.5	15.7	17.0	18.2	19.7	21.2	23.2	24.7	26.7	28.7	30.7	33.2	35.7	38.2	40.7	43.2	46.2	49.2	52	56	59	63	68
	.92	**.93**	**.94**	**.95**	**.96**	**.97**	**.98**	**.99**	**1.00**	**1.01**	**1.02**	**1.03**	**1.04**	**1.05**	**1.06**	**1.07**	**1.08**	**1.09**	**1.10**	**1.11**	**1.12**	**1.13**	**1.14**	**1.16**
1.10	12.5	13.8	15.0	16.3	17.5	19.0	20.5	22.5	24.0	26.0	28.0	30.0	32.5	35.0	37.5	40.0	42.5	45.5	48.5	52	55	59	63	68
1.12	15.0	16.3	17.5	18.8	20.0	21.5	23.0	25.0	26.5	28.5	30.5	32.5	35.0	37.5	40.0	42.5	45.0	48.0	51.0	54	58	61	65	70
	12.1	13.4	14.6	15.9	17.1	18.6	20.1	22.1	23.6	25.6	27.6	29.6	32.1	34.6	37.1	39.6	42.1	45.1	48.1	51	54	58	62	67
	11.7	12.9	14.2	15.4	16.7	18.2	19.7	21.7	23.2	25.2	27.2	29.2	31.7	34.2	36.7	39.2	41.7	44.7	47.7	51	55	58	62	67
1.13	15.6	16.8	18.1	19.3	20.6	22.1	23.6	25.6	27.1	29.1	31.1	33.1	35.6	38.1	40.6	43.1	45.6	48.6	51.6	55	58	62	66	71
	15.3	16.6	17.8	19.1	20.3	21.8	23.3	25.3	26.8	28.8	30.8	32.8	35.3	37.8	40.3	42.8	45.3	48.3	51.3	54	58	61	65	70
	13.9	15.1	16.4	17.6	18.9	20.4	21.9	23.9	25.4	27.4	29.4	31.4	33.9	36.4	38.9	41.4	43.9	46.9	49.9	53	56	60	64	69
	11.1	12.4	13.6	14.9	16.1	17.6	19.1	21.1	22.6	24.6	26.6	28.6	31.1	33.6	36.1	38.6	41.1	44.1	47.1	50	54	57	61	66
1.15	13.0	14.3	15.5	16.8	18.0	19.5	21.0	23.0	24.5	26.5	28.5	30.5	33.0	35.5	38.0	40.5	43.0	46.0	49.0	52	56	59	63	68
	9.9	11.1	12.4	13.6	14.9	16.4	17.9	19.9	21.4	23.4	25.4	27.4	29.9	32.4	34.9	37.4	39.9	42.9	45.9	49	52	56	60	65
1.16	14.7	15.9	17.2	18.4	19.7	21.2	22.7	24.7	26.2	28.2	30.2	32.2	34.7	37.2	39.7	42.2	44.7	47.7	50.7	54	57	61	65	70
	10.5	11.7	13.0	14.2	15.5	17.0	18.5	20.5	22.0	24.0	26.0	28.0	30.5	33.0	35.5	38.0	40.5	43.5	46.5	49	53	56	60	65
	...	9.5	10.8	12.0	13.3	14.8	16.3	18.3	19.8	21.8	23.8	25.8	28.3	30.8	33.3	35.8	38.3	41.3	44.3	47	51	54	58	63
1.18	12.3	13.6	14.8	16.1	17.3	18.8	20.3	22.3	23.8	25.8	27.8	29.8	32.3	34.8	37.3	39.8	42.3	45.3	48.3	51	55	58	62	67
	11.9	13.1	14.4	15.6	16.9	18.4	19.9	21.9	23.4	25.4	27.4	29.4	31.9	34.4	36.9	39.4	41.9	44.9	47.9	51	54	58	62	67
1.19	15.4	16.7	17.9	19.2	20.4	21.9	23.4	25.4	26.9	28.9	30.9	32.9	35.4	37.9	40.4	42.9	45.4	48.4	51.4	54	58	61	65	70
1.20	15.2	16.4	17.7	18.9	20.2	21.7	23.2	25.2	26.7	28.7	30.7	32.7	35.2	37.7	40.2	42.7	45.2	48.2	51.2	54	58	61	65	70
	11.4	12.6	13.9	15.1	16.4	17.9	19.4	21.4	22.9	24.9	26.9	28.9	31.4	33.9	36.4	38.9	41.4	44.4	47.4	50	54	58	61	66
1.22	14.8	16.0	17.3	18.5	19.8	21.3	22.8	24.8	26.3	28.3	30.3	32.3	34.8	37.3	39.8	42.3	44.8	47.8	50.8	54	57	61	65	70
	12.8	14.1	15.3	16.6	17.8	19.3	20.8	22.8	24.3	26.3	28.3	30.3	32.8	35.3	37.8	40.3	42.8	45.8	48.8	52	55	59	63	68

Arc & Length Factors are approximate values
Refer to Selection Procedure for more precise values

NOTE: Selection program VIA-VISA available at www.ptwizard.com.

SELECTION

DODGE®

3VX STOCK DRIVE SELECTIONS

Speed Ratio	Stock Sheaves Diameter Driver	Stock Sheaves Diameter Driven	3500 RPM Driver Driven RPM	3500 RPM Driver HP/Belt 3VX	1750 RPM Driver Driven RPM	1750 RPM Driver HP/Belt 3VX	1160 RPM Driver Driven RPM	1160 RPM Driver HP/Belt 3VX	Belt Number and Approx. Center Distance 3VX 250	3VX 265	3VX 280	3VX 300	3VX 315	3VX 335	3VX 355	3VX 375
1.23	3.35	4.12	2838	6.33	1419	3.53	941	2.46	6.6	7.4	8.1	9.1	9.9	10.9	11.9	12.9
	5.30	6.5	2849	11.84	1424	6.72	944	4.67	...	...	...	...	...	7.5	8.5	9.5
	5.60	6.9	2836	12.62	1418	7.19	940	5.00	...	...	...	...	...	...	7.9	8.9
	6.50	8.0	2840	14.78	1420	8.59	941	5.99	...	...	...	...	...	...	...	...
1.24	3.65	4.5	2831	7.23	1416	4.03	938	2.81	6.1	6.8	7.6	8.6	9.3	10.3	11.3	12.3
ARC-LENGTH CORRECTION FACTOR —>									.82	.83	.84	.86	.86	.88	.89	.90
1.25	4.50	5.6	2806	9.70	1403	5.44	930	3.78	...	...	...	7.1	7.8	8.8	9.8	10.8
1.27	2.65	3.35	2758	4.18	1379	2.35	914	1.65	7.8	8.5	9.3	10.3	11.0	12.0	13.0	14.0
	4.75	6.0	2765	10.40	1382	5.85	916	4.07	...	...	...	6.5	7.3	8.3	9.3	10.3
1.29	4.12	5.3	2713	8.65	1357	4.83	899	3.36	...	5.8	6.6	7.6	8.3	9.3	10.3	11.3
1.30	5.00	6.5	2686	11.11	1343	6.27	890	4.35	...	...	...	...	...	7.7	8.7	9.7
	5.30	6.9	2682	11.90	1341	6.74	889	4.69	...	...	...	...	...	7.1	8.1	9.1
1.31	2.80	3.65	2674	4.68	1337	2.62	886	1.83	7.4	8.2	8.9	9.9	10.7	11.7	12.7	13.7
	3.15	4.12	2666	5.77	1333	3.22	884	2.25	6.8	7.5	8.3	9.3	10.0	11.0	12.0	13.0
	3.65	4.75	2681	7.29	1340	4.06	889	2.82	5.9	6.6	7.4	8.4	9.1	10.1	11.1	12.1
1.32	10.6	14.0	2647	21.34	1323	14.43	877	10.27	...	...	...	...	...	...	...	...
1.33	8.00	10.6	2637	17.92	1319	10.86	874	7.61	...	...	...	...	...	...	...	...
1.34	4.50	6.0	2618	9.76	1309	5.47	868	3.80	...	...	...	6.7	7.5	8.5	9.5	10.5
	6.00	8.0	2619	13.68	1310	7.86	868	5.47	...	...	...	...	...	...	...	...
1.35	3.35	4.5	2596	6.40	1298	3.57	860	2.48	6.3	7.1	7.8	8.8	9.6	10.6	11.6	12.6
1.36	4.12	5.6	2567	8.69	1283	4.85	851	3.37	...	...	6.3	7.3	8.1	9.1	10.1	11.1
ARC-LENGTH CORRECTION FACTOR —>									.82	.83	.84	.86	.86	.88	.89	.90
1.37	3.65	5.0	2545	7.32	1273	4.08	844	2.84	5.7	6.4	7.2	8.2	8.9	9.9	10.9	11.9
	4.75	6.5	2550	10.47	1275	5.88	845	4.09	...	...	...	...	6.9	7.9	8.9	9.9
1.38	2.65	3.65	2528	4.24	1264	2.38	838	1.67	7.5	8.3	9.0	10.0	10.8	11.8	12.8	13.8
	3.00	4.12	2537	5.34	1268	2.98	841	2.08	6.9	7.6	8.4	9.4	10.1	11.1	12.1	13.1
	5.00	6.9	2529	11.15	1265	6.29	838	4.37	...	...	...	...	...	7.3	8.3	9.4
1.42	3.35	4.75	2457	6.44	1229	3.58	814	2.50	6.1	6.9	7.6	8.6	9.4	10.4	11.4	12.4
1.43	5.60	8.0	2443	12.73	1222	7.25	810	5.04	...	...	...	...	...	...	...	...
1.44	3.15	4.5	2438	5.83	1219	3.25	808	2.26	6.5	7.2	8.0	9.0	9.7	10.7	11.7	12.7
1.45	4.50	6.5	2415	9.81	1207	5.49	800	3.81	...	...	...	...	7.0	8.0	9.1	10.1
1.46	3.65	5.3	2400	7.35	1200	4.09	795	2.85	...	6.2	6.9	7.9	8.7	9.7	10.7	11.7
	4.12	6.0	2394	8.73	1197	4.87	793	3.39	...	...	...	7.0	7.7	8.8	9.8	10.8
	4.75	6.9	2401	10.50	1201	5.90	796	4.10	...	...	...	...	...	7.5	8.5	9.5
1.48	2.80	4.12	2365	4.75	1182	2.66	784	1.86	7.0	7.8	8.5	9.5	10.3	11.3	12.3	13.3
1.50	3.35	5.0	2333	6.46	1167	3.60	773	2.50	5.9	6.6	7.4	8.4	9.2	10.2	11.2	12.2
1.51	3.00	4.5	2320	5.39	1160	3.00	769	2.10	6.6	7.3	8.1	9.1	9.8	10.8	11.8	12.8
	5.30	8.0	2311	11.99	1156	6.79	766	4.72	...	...	...	...	...	...	...	8.2
1.52	3.15	4.75	2309	5.85	1154	3.26	765	2.27	6.2	7.0	7.8	8.8	9.5	10.5	11.5	12.5
1.54	3.65	5.6	2270	7.38	1135	4.11	752	2.85	...	...	6.7	7.7	8.4	9.4	10.4	11.4
	4.50	6.9	2274	9.83	1137	5.51	754	3.82	...	...	...	...	...	7.7	8.7	9.7
	6.90	10.6	2273	15.81	1136	9.27	753	6.47	...	...	...	...	...	...	...	...
1.57	2.65	4.12	2236	4.30	1118	2.41	741	1.69	7.1	7.9	8.7	9.7	10.4	11.4	12.4	13.4
1.58	4.12	6.5	2209	8.76	1104	4.89	732	3.40	...	...	...	6.6	7.3	8.3	9.3	10.3
1.59	3.00	4.75	2197	5.41	1098	3.01	728	2.10	6.4	7.1	7.9	8.9	9.6	10.6	11.6	12.6
	3.35	5.3	2200	6.48	1100	3.61	729	2.51	5.6	6.4	7.1	8.1	8.9	9.9	10.9	11.9
1.60	3.15	5.0	2192	5.87	1096	3.27	726	2.28	6.0	6.8	7.5	8.6	9.3	10.3	11.3	12.3
ARC-LENGTH CORRECTION FACTOR —>									.81	.82	.83	.85	.86	.87	.89	.89
1.61	5.00	8.0	2179	11.22	1090	6.32	722	4.39	...	...	...	...	...	...	...	8.4
1.62	2.80	4.5	2163	4.79	1081	2.68	717	1.87	6.7	7.5	8.2	9.2	10.0	11.0	12.0	13.0
1.64	6.50	10.6	2140	14.95	1070	8.67	709	6.04	...	...	...	...	...	...	...	...
1.65	3.65	6.0	2118	7.40	1059	4.12	702	2.86	...	...	6.3	7.3	8.1	9.1	10.1	11.1
1.68	3.00	5.0	2086	5.42	1043	3.02	691	2.11	6.1	6.9	7.7	8.7	9.4	10.4	11.4	12.4
	3.35	5.6	2081	6.50	1041	3.62	690	2.52	...	6.1	6.9	7.9	8.6	9.7	10.7	11.7
	4.12	6.9	2080	8.78	1040	4.90	689	3.40	...	...	...	...	7.0	8.0	9.0	10.0
1.69	3.15	5.3	2067	5.89	1033	3.28	685	2.28	5.8	6.5	7.3	8.3	9.0	10.1	11.1	12.1
	4.75	8.0	2069	10.55	1035	5.93	686	4.11	...	...	...	...	...	...	7.6	8.6
1.71	2.65	4.5	2045	4.33	1022	2.42	678	1.70	6.8	7.6	8.3	9.3	10.1	11.1	12.1	13.1
1.71	2.80	4.75	2048	4.80	1024	2.68	679	1.88	6.5	7.3	8.0	9.0	9.8	10.8	11.8	12.8
1.75	8.00	14.0	19.95	18.04	997	10.92	661	7.65	...	...	...	...	...	...	...	...
1.77	6.00	10.6	1974	13.79	987	7.91	654	5.51	...	...	...	...	...	...	...	...
1.78	3.00	5.3	1967	5.44	983	3.03	652	2.11	5.9	6.6	7.4	8.4	9.2	10.2	11.2	12.2
ARC-LENGTH CORRECTION FACTOR —>									.80	.81	.82	.84	.85	.86	.88	.89

NOTE: Selection program VIA-VISA available at www.ptwizard.com.

DODGE®

3VX STOCK DRIVE SELECTIONS

Speed Ratio	Belt Number and Approx. Center Distance																							
	3VX 400	3VX 425	3VX 450	3VX 475	3VX 500	3VX 530	3VX 560	3VX 600	3VX 630	3VX 670	3VX 710	3VX 750	3VX 800	3VX 850	3VX 900	3VX 950	3VX 1000	3VX 1060	3VX 1120	3VX 1180	3VX 1250	3VX 1320	3VX 1400	3VX 1500
1.23	14.1	15.4	16.6	17.9	19.1	20.6	22.1	24.1	25.6	27.6	29.6	31.6	34.1	36.6	39.1	41.6	44.1	47.1	50.1	53	57	60	64	69
	10.7	12.0	13.2	14.5	15.7	17.2	18.7	20.7	22.2	24.2	26.2	28.2	30.7	33.2	35.7	38.2	40.7	43.7	46.7	50	53	57	61	66
	10.2	11.4	12.7	13.9	15.2	16.7	18.2	20.2	21.7	23.7	25.7	27.7	30.2	32.7	35.2	37.7	40.2	43.2	46.2	49	53	56	60	65
	8.6	9.8	11.1	12.3	13.6	15.1	16.6	18.6	20.1	22.1	24.1	26.1	28.6	31.1	33.6	36.1	38.6	41.6	44.6	48	51	55	59	64
1.24	13.6	14.8	16.1	17.3	18.6	20.1	21.6	23.6	25.1	27.1	29.1	31.1	33.6	36.1	38.6	41.1	43.6	46.6	49.6	53	56	61	64	69
	.91	.92	.93	.94	.95	.96	.97	.99	1.00	1.01	1.02	1.03	1.04	1.05	1.06	1.07	1.08	1.09	1.10	1.11	1.12	1.13	1.14	1.15
1.25	12.1	13.3	14.6	15.8	17.1	18.6	20.1	22.1	23.6	25.6	27.6	29.6	32.1	34.6	37.1	39.6	42.1	45.1	48.1	51	55	58	62	67
1.27	15.3	16.5	17.8	19.0	20.3	21.8	23.3	25.3	26.8	28.8	30.8	32.8	35.3	37.8	40.3	42.1	45.3	48.3	51.3	54	58	61	65	70
	11.5	12.8	14.0	15.3	16.5	18.1	19.6	21.6	23.1	25.1	27.1	29.1	31.6	34.1	36.6	39.1	41.6	44.6	47.6	51	54	58	62	67
1.29	12.6	13.8	15.1	16.3	17.6	19.1	20.6	22.6	24.1	26.1	28.1	30.1	32.6	35.1	37.6	40.1	42.6	45.6	48.6	52	55	59	63	68
1.30	10.9	12.2	13.5	14.7	16.0	17.5	19.0	21.0	22.5	24.5	26.5	28.5	31.0	33.5	36.0	38.5	41.0	44.0	47.0	50	53	57	61	66
	10.4	11.6	12.9	14.2	15.4	16.9	18.4	20.4	21.9	23.9	25.9	27.9	30.4	32.9	35.4	37.9	40.4	43.4	46.4	49	53	56	60	65
1.31	14.9	16.2	17.4	18.7	19.9	21.4	22.9	24.9	26.4	28.4	30.4	32.4	34.9	37.4	39.9	42.4	44.9	47.9	50.9	54	57	61	65	70
	14.3	15.5	16.8	18.0	19.3	20.8	22.3	24.3	25.8	27.8	29.8	31.8	34.3	36.8	39.3	41.8	44.3	47.3	50.3	53	57	60	64	69
	13.4	14.6	15.9	17.1	18.4	19.9	21.4	23.4	24.9	26.9	28.9	30.9	33.4	35.9	38.4	40.9	43.4	46.4	49.4	52	56	59	63	68
1.32	...	...	...	...	...	...	...	...	...	14.1	16.1	18.1	20.6	23.1	25.6	28.1	30.6	33.6	36.6	40	43	47	51	56
1.33	...	...	...	...	...	11.8	13.3	15.3	16.8	18.9	20.9	22.9	25.4	27.9	30.4	32.9	35.4	38.4	41.4	44	48	51	55	60
1.34	11.7	13.0	14.2	15.5	16.7	18.2	19.7	21.7	23.2	25.2	27.2	29.2	31.7	34.2	36.7	39.3	41.8	44.8	47.8	51	54	58	62	67
	9.0	10.2	11.5	12.7	14.0	15.5	17.0	19.0	20.5	22.5	24.5	26.5	29.0	31.5	34.0	36.5	39.0	42.0	45.0	48	52	55	59	64
1.35	13.8	15.1	16.3	17.6	18.8	20.3	21.8	23.8	25.3	27.3	29.3	31.3	33.8	36.3	38.8	41.3	43.8	46.8	49.8	53	56	60	64	69
1.36	12.3	13.6	14.9	16.1	17.4	18.9	20.4	22.4	23.9	25.9	27.9	29.9	32.4	34.9	37.4	39.9	42.4	45.4	48.4	51	55	58	62	67
	.91	.92	.93	.94	.95	.96	.97	.99	1.00	1.01	1.02	1.03	1.04	1.05	1.06	1.07	1.08	1.09	1.10	1.11	1.12	1.13	1.14	1.15
1.37	13.2	14.4	15.7	16.9	18.2	19.7	21.2	23.2	24.7	26.7	28.7	30.7	33.2	35.7	38.2	40.7	43.2	46.2	49.2	52	56	59	63	68
	11.1	12.4	13.6	14.9	16.1	17.6	19.1	21.2	22.7	24.7	26.7	28.7	31.2	33.7	36.2	38.7	41.2	44.2	47.2	50	54	57	61	66
1.38	15.0	16.3	17.5	18.8	20.0	21.5	23.0	25.0	26.5	28.6	30.6	32.6	35.1	37.6	40.1	42.6	45.1	48.1	51.1	54	58	61	65	70
	14.4	15.7	16.9	18.2	19.4	20.9	22.4	24.4	25.9	27.9	29.9	31.9	34.4	36.9	39.4	41.9	44.4	47.4	50.4	53	57	60	64	69
	10.6	11.9	13.1	14.4	15.6	17.1	18.6	20.6	22.1	24.1	26.1	28.1	30.6	33.1	35.6	38.1	40.6	43.6	46.6	50	53	57	61	66
1.42	13.6	14.9	16.1	17.4	18.6	20.1	21.6	23.6	25.1	27.1	29.1	31.1	33.6	36.1	38.6	41.1	43.6	46.6	49.6	53	56	60	64	69
1.43	9.2	10.5	11.8	13.0	14.3	15.8	17.3	19.3	20.8	22.8	24.8	26.8	29.3	31.8	34.3	36.8	39.3	42.3	45.3	48	52	55	59	64
1.44	14.0	15.2	16.5	17.7	19.0	20.5	22.0	24.0	25.5	27.5	29.5	31.5	34.0	36.5	39.0	41.5	44.0	47.0	50.0	53	56	60	64	69
1.45	11.3	12.6	13.8	15.1	16.3	17.8	19.3	21.3	22.8	24.8	26.8	28.8	31.3	33.9	36.4	38.9	41.4	44.4	47.4	50	54	57	61	66
1.46	12.9	14.2	15.5	16.7	18.0	19.5	21.0	23.0	24.5	26.5	28.5	30.5	33.0	35.5	38.0	40.5	43.0	46.0	49.0	52	55	59	63	68
	12.0	13.3	14.5	15.8	17.0	18.5	20.0	22.0	23.5	25.5	27.5	29.5	32.0	34.5	37.0	39.5	42.0	45.0	48.0	51	55	58	62	67
	10.8	12.1	13.3	14.6	15.8	17.3	18.8	20.8	22.3	24.3	26.3	28.3	30.8	33.3	35.8	38.3	40.8	43.8	46.8	50	53	57	61	66
1.48	14.6	15.8	17.1	18.3	19.6	21.1	22.6	24.6	26.1	28.1	30.1	32.1	34.6	37.1	39.6	42.1	44.6	47.6	50.6	54	57	61	65	70
1.50	13.4	14.7	15.9	17.2	18.4	19.9	21.4	23.4	24.9	26.9	28.9	30.9	33.4	35.9	38.4	40.9	43.4	46.4	49.4	52	56	59	63	68
1.51	14.1	15.3	16.6	17.8	19.1	20.6	22.1	24.1	25.6	27.6	29.6	31.6	34.1	36.6	39.1	41.6	44.1	47.1	50.1	53	57	60	64	69
	9.5	10.7	12.0	13.2	14.5	16.0	17.5	19.5	21.0	23.0	25.0	27.0	29.5	32.0	34.5	37.0	39.5	42.5	45.5	49	52	56	60	65
1.52	13.8	15.0	16.3	17.5	18.8	20.3	21.8	23.8	25.3	27.3	29.3	31.3	33.8	36.3	38.8	41.3	43.8	46.8	49.8	53	56	60	64	69
1.54	12.7	14.0	15.2	16.5	17.7	19.2	20.7	22.7	24.2	26.2	28.2	30.2	32.7	35.2	37.7	40.2	42.7	45.7	48.7	52	55	59	63	68
	11.0	12.2	13.5	14.8	16.0	17.5	19.0	21.0	22.5	24.5	26.5	28.5	31.0	33.5	36.0	38.5	41.0	44.0	47.0	50	54	57	61	66
	...	...	...	...	11.1	12.6	14.1	16.2	17.7	19.7	21.7	23.7	26.2	28.7	31.2	33.7	36.2	39.2	42.2	45	49	52	56	61
1.57	14.7	15.9	17.2	18.4	19.7	21.2	22.7	24.7	26.2	28.2	30.2	32.2	34.7	37.2	39.7	42.2	44.7	47.7	50.7	54	57	61	65	70
1.58	11.6	12.9	14.1	15.4	16.6	18.1	19.6	21.6	23.1	25.1	27.1	29.1	31.6	34.1	36.6	39.1	41.6	44.6	47.6	51	54	58	62	67
1.59	13.9	15.1	16.4	17.6	18.9	20.4	21.9	23.9	25.4	27.4	29.4	31.4	33.9	36.4	38.9	41.4	43.9	46.9	49.9	53	56	60	64	69
	13.2	14.4	15.7	16.9	18.2	19.7	21.2	23.2	24.7	26.7	28.7	30.7	33.2	35.7	38.2	40.7	43.2	46.2	49.2	52	56	59	63	68
1.60	13.6	14.8	16.1	17.3	18.6	20.1	21.6	23.6	25.1	27.1	29.1	31.1	33.6	36.1	38.6	41.1	43.6	46.6	49.6	53	56	60	64	69
	.90	.92	.93	.94	.95	.96	.97	.98	.99	1.01	1.02	1.03	1.04	1.05	1.06	1.07	1.08	1.09	1.10	1.11	1.12	1.13	1.14	1.15
1.61	9.7	10.9	12.2	13.5	14.7	16.2	17.7	19.7	21.2	23.2	25.3	27.3	29.8	32.3	34.8	37.3	39.8	42.8	45.8	49	52	56	60	65
1.62	14.2	15.5	16.7	18.0	19.3	20.8	22.3	24.3	25.8	27.8	29.8	31.8	34.3	36.8	39.3	41.8	44.3	47.3	50.3	53	57	60	64	69
1.64	...	...	...	10.1	11.4	12.9	14.4	16.4	18.0	20.0	22.0	24.0	26.5	29.0	31.5	34.0	36.5	39.5	42.5	46	49	53	57	62
1.65	12.4	13.6	14.9	16.1	17.4	18.9	20.4	22.4	23.9	25.9	27.9	29.9	32.4	34.9	37.4	39.9	42.4	45.4	48.4	51	55	58	62	67
1.68	13.7	14.9	16.2	17.4	18.7	20.2	21.7	23.7	25.2	27.2	29.2	31.2	33.7	36.2	38.7	41.2	43.7	46.7	49.7	53	56	60	64	69
	12.9	14.2	15.4	16.7	17.9	19.4	20.9	22.9	24.4	26.5	28.5	30.5	33.0	35.5	38.0	40.5	43.0	46.0	49.0	52	55	59	63	68
	11.3	12.5	13.8	15.0	16.3	17.8	19.3	21.3	22.8	24.8	26.8	28.8	31.3	33.8	36.3	38.8	41.3	44.3	47.3	50	54	57	61	66
1.69	13.3	14.6	15.8	17.1	18.3	19.8	21.3	23.3	24.8	26.8	28.8	30.8	33.3	35.9	38.4	40.9	43.4	46.4	49.4	52	56	59	63	68
	9.9	11.1	12.4	13.6	14.9	16.4	17.9	19.9	21.4	23.4	25.4	27.4	29.9	32.5	35.0	37.5	40.0	43.0	46.0	49	52	56	60	65
1.71	14.4	15.6	16.9	18.1	19.4	20.9	22.4	24.4	25.9	27.9	29.9	31.9	34.4	36.9	39.4	41.9	44.4	47.4	50.4	53	57	60	64	69
1.71	14.0	15.3	16.5	17.8	19.0	20.6	22.1	24.1	25.6	27.6	29.6	31.6	34.1	36.6	39.1	41.6	44.1	47.1	50.1	53	57	60	64	69
1.75	...	...	...	...	...	...	...	...	13.9	15.9	18.0	20.0	22.5	25.1	27.6	30.1	32.6	35.6	38.6	42	45	49	53	58
1.77	...	...	...	10.5	11.7	13.3	14.8	16.8	18.3	20.3	22.4	24.4	26.9	29.4	31.9	34.4	36.9	39.9	42.9	46	49	53	57	62
1.78	13.4	14.7	15.9	17.2	18.4	20.0	21.5	23.5	25.0	27.0	29.0	31.0	33.5	36.0	38.5	41.0	43.5	46.5	49.5	52	56	59	63	68
	.90	.91	.92	.93	.95	.96	.97	.98	.99	1.00	1.01	1.02	1.04	1.05	1.06	1.07	1.08	1.09	1.10	1.11	1.12	1.13	1.14	1.15

NOTE: Selection program VIA-VISA available at www.ptwizard.com.

SELECTION

3VX STOCK DRIVE SELECTIONS

Speed Ratio	Stock Sheaves Diameter Driver	Stock Sheaves Diameter Driven	3500 RPM Driver Driven RPM	3500 RPM Driver HP/Belt 3VX	1750 RPM Driver Driven RPM	1750 RPM Driver HP/Belt 3VX	1160 RPM Driver Driven RPM	1160 RPM Driver HP/Belt 3VX	Belt Number and Approx. Center Distance 3VX 265	3VX 280	3VX 300	3VX 315	3VX 335	3VX 355	3VX 375
1.79	3.65	6.50	1953	7.42	977	4.13	647	2.87	...	...	6.9	7.6	8.7	9.7	10.7
	4.50	8.00	1959	9.87	980	5.53	649	3.84	...	...				7.7	8.8
1.80	2.80	5.00	1944	4.81	972	2.69	644	1.88	7.0	7.8	8.8	9.6	10.6	11.6	12.6
	3.35	6.00	1941	6.52	971	3.62	643	2.52	5.8	6.5	7.5	8.3	9.3	10.3	11.3
	10.60	19.00	1949	21.47	974	14.50	646	10.31	...	...	...			...	...
1.81	2.65	4.75	1936	4.34	968	2.43	642	1.70	7.4	8.1	9.1	9.9	10.9	11.9	12.9
1.88	3.00	5.60	1860	5.45	930	3.03	617	2.12	6.4	7.1	8.1	8.9	9.9	10.9	11.9
1.90	2.65	5.00	1838	4.35	919	2.44	609	1.71	7.1	7.9	8.9	9.7	10.7	11.7	12.7
	3.65	6.90	1839	7.43	920	4.13	610	2.87	...	...	6.5	7.3	8.3	9.3	10.3
	5.60	10.60	1841	12.81	921	7.29	610	5.07	...	...	...	...	....		
1.91	2.80	5.30	1833	4.82	917	2.69	608	1.88	6.8	7.5	8.5	9.3	10.3	11.3	12.3
1.92	3.15	6.00	1824	5.91	912	3.29	604	2.29	5.9	6.7	7.7	8.4	9.5	10.5	11.5
1.95	3.35	6.50	1791	6.53	895	3.63	593	2.53	...	...	7.1	7.9	8.9	9.9	10.9
	4.12	8.00	1792	8.81	896	4.91	594	3.41	...	...	...	...	...	8.0	9.0
2.01	5.30	10.60	1742	12.05	871	6.82	577	4.74	...	...	...	...	...	...	...
2.02	2.65	5.30	1733	4.36	367	2.44	574	1.71	6.9	7.6	8.7	9.4	10.4	11.4	12.4
	2.80	5.60	1734	4.83	867	2.70	575	1.89	6.5	7.3	8.3	9.0	10.1	11.1	12.1
	3.00	6.00	1735	5.46	868	3.04	575	2.12	6.0	6.8	7.8	8.5	9.6	10.6	11.6
2.04	6.90	14.00	1719	15.88	859	9.30	570	6.49	...	...	...	...	...	...	...
2.08	3.15	6.50	1682	5.93	841	3.30	558	2.30	...	6.2	7.2	8.0	9.0	10.0	11.0
	3.35	6.90	1686	6.54	843	3.63	559	2.53	...	...	6.7	7.5	8.5	9.5	10.6
ARC-LENGTH CORRECTION FACTOR —>									.81	.82	.84	.85	.86	.87	.88
2.13	2.65	5.60	1640	4.36	820	2.44	543	1.71	6.6	7.4	8.4	9.2	10.2	11.2	12.2
	5.00	10.60	1642	11.27	821	6.35	544	4.41	...	...	...	...	...	...	...
2.16	2.80	6.00	1618	4.84	809	2.70	536	1.89	6.1	6.9	7.9	8.7	9.7	10.7	11.7
	6.50	14.00	1618	14.99	809	8.70	536	6.06	...	...	...	...	...	...	...
2.19	3.00	6.50	1601	5.47	800	3.04	531	2.12	...	6.3	7.3	8.1	9.1	10.1	11.2
2.21	3.15	6.90	1584	5.93	792	3.30	525	2.30	...	...	6.9	7.6	8.7	9.7	10.7
	3.65	8.00	1585	7.45	792	4.14	525	2.88	...	...	...	...	7.3	8.3	9.3
2.24	4.75	10.60	1559	10.60	780	5.95	517	4.13	...	...	...	...	...	...	...
2.29	2.65	6.00	1529	4.37	765	2.45	507	1.71	6.2	7.0	8.0	8.8	9.8	10.8	11.8
2.32	3.00	6.90	1507	5.47	754	3.05	500	2.12	...	...	7.0	7.7	8.8	9.8	10.8
2.34	6.00	14.00	1493	13.83	746	7.93	495	5.52	...	...	...	...	...	...	...
2.35	2.80	6.50	1492	4.84	746	2.70	495	1.89	...	64	7.5	8.2	9.3	10.3	11.3
2.36	10.6	25.00	1480	21.5	740	14.51	491	10.33	...	...	...	...	...	...	...
2.37	4.50	10.60	1476	9.91	738	5.54	489	3.85	...	...	...	...	...	...	...
2.38	8.00	19.00	1468	18.07	734	10.94	487	7.66	...	...	...	...	...	...	...
2.41	3.35	8.00	1453	6.55	726	3.64	482	2.53	...	...	...	...	7.5	8.5	9.6
2.48	2.65	6.50	1411	4.37	705	2.45	468	1.71	5.7	6.5	7.6	8.3	9.4	10.4	11.4
2.49	2.80	6.90	1405	4.85	703	2.71	466	1.89	..	6.0	7.1	7.9	8.9	9.9	10.9
2.51	5.60	14.00	1392	12.84	696	7.31	462	5.08	...	...	...	...	...	...	...
ARC-LENGTH CORRECTION FACTOR —>									.78	.80	.82	.83	.84	.86	.87
2.56	3.15	8.00	1365	5.94	682	3.30	452	2.30	...	...	...	...	7.6	8.7	9.7
2.59	4.12	10.60	1350	8.84	675	4.92	448	3.42	...	...	...	...	...	...	...
2.63	2.65	6.90	1328	4.38	664	2.45	440	1.72	...	6.1	7.2	8.0	9.0	10.0	11.0
2.66	5.30	14.00	1317	12.08	659	6.83	437	4.75	...	...	...	...	...	...	...
2.69	3.00	8.00	1299	5.48	649	3.05	430	2.13	...	...	...	6.6	7.7	8.8	9.8
2.77	6.90	19.00	1265	15.90	633	9.31	419	6.50	...	...	...	...	...	...	...
2.82	5.00	14.00	1242	11.29	621	6.36	412	4.41	...	...	...	..	...	...	...
2.89	2.80	8.00	1211	4.86	605	2.71	401	1.89	...	...	...	6.8	7.8	8.9	9.9
2.93	3.65	10.60	1194	7.46	597	4.15	396	2.88	...	...	...	...	...	...	...
2.94	6.50	19.00	1191	15.01	596	8.71	395	6.07	...	...	...	...	...	...	...
2.97	4.75	14.00	1179	10.61	590	5.95	391	4.13	...	...	...	...	...	...	...
3.06	2.65	8.00	1145	4.38	572	2.45	379	1.72	...	...	...	6.9	7.9	9.0	10.0
3.13	4.50	14.00	1116	9.92	558	5.55	370	3.85	...	...	...	...	...	...	...
ARC-LENGTH CORRECTION FACTOR —>									...	.75	.78	.80	.82	.84	.85

*** NOTE:** Stock belt size 3VX250 not shown

NOTE: Selection program VIA-VISA available at www.ptwizard.com.

DODGE®

3VX STOCK DRIVE SELECTIONS

Speed Ratio	Belt Number and Approx. Center Distance																							
	3VX 400	3VX 425	3VX 450	3VX 475	3VX 500	3VX 530	3VX 560	3VX 600	3VX 630	3VX 670	3VX 710	3VX 750	3VX 800	3VX 850	3VX 900	3VX 950	3VX 1000	3VX 1060	3VX 1120	3VX 1180	3VX 1250	3VX 1320	3VX 1400	3VX 1500
1.79	11.9	13.2	15.5	15.7	17.0	18.5	20.0	22.0	23.5	25.5	27.5	29.5	32.0	34.5	37.0	39.5	42.0	45.0	48.0	51	55	58	62	67
	10.0	11.3	12.6	13.8	15.1	16.6	18.1	20.1	21.6	23.6	25.6	27.6	30.1	32.6	35.1	37.6	40.1	43.2	46.2	49	53	56	60	65
1.80	13.8	15.1	16.3	17.6	18.8	20.3	21.8	23.9	25.4	27.4	29.4	31.4	33.9	36.4	38.9	41.4	43.9	46.9	49.9	53	56	60	64	69
	12.6	13.8	15.1	16.4	17.6	19.1	20.6	22.6	24.1	26.1	28.1	30.1	32.6	35.1	37.6	40.1	42.6	45.6	48.6	52	55	59	63	68
	...	...	...	...	...	...	...	...	...	...	...	...	...	18.8	21.4	23.9	26.4	29.5	32.5	36	39	43	47	52
1.81	14.2	15.4	16.7	17.9	19.2	20.7	22.2	24.2	25.7	27.7	29.7	31.7	34.2	36.7	39.2	41.7	44.2	47.2	50.2	53	57	60	64	69
1.88	13.2	14.4	15.7	16.9	18.2	19.7	21.2	23.2	24.7	26.7	28.7	30.7	33.2	35.7	38.2	40.7	43.2	46.2	49.2	52	56	59	63	68
1.90	13.9	15.2	16.5	17.7	19.0	20.5	22.0	24.0	25.5	27.5	29.5	31.5	34.0	36.5	39.0	41.5	44.0	47.0	50.0	53	56	60	64	69
	11.6	12.9	14.1	15.4	16.6	18.1	19.7	21.7	23.2	25.2	27.2	29.2	31.7	34.2	36.7	39.2	41.7	44.7	47.7	51	54	58	62	67
	...	...	9.5	10.7	12.0	13.6	15.1	17.1	18.6	20.6	22.6	24.7	27.2	29.7	32.2	34.7	37.2	40.2	43.2	46	50	53	57	62
1.91	13.6	14.8	16.1	17.3	18.6	20.1	21.6	23.6	25.1	27.1	29.1	31.1	33.6	36.1	38.6	41.1	43.6	46.6	49.6	53	56	60	64	69
1.92	12.7	14.0	15.3	16.5	17.8	19.3	20.8	22.8	24.3	26.3	28.3	30.3	32.8	35.3	37.8	40.3	42.8	45.8	48.8	52	55	59	63	68
1.95	12.2	13.4	14.7	15.9	17.2	18.7	20.2	22.2	23.7	25.7	27.7	29.7	32.2	34.7	37.2	39.7	42.2	45.2	48.2	51	55	58	62	67
	10.3	11.6	12.8	14.1	15.4	16.9	18.4	20.4	21.9	23.9	25.9	27.9	30.4	32.9	35.4	37.9	40.4	43.4	46.4	49	53	56	60	65
2.01	...	...	9.7	10.9	12.2	13.8	15.3	17.3	18.8	20.9	22.9	24.9	27.4	29.9	32.4	34.9	37.4	40.4	43.4	46	50	53	58	62
2.02	13.7	15.0	16.2	17.5	18.7	20.2	21.7	23.7	25.2	27.2	29.2	31.2	33.7	36.2	38.7	41.2	43.7	46.7	49.7	53	56	60	64	69
	13.3	14.6	15.8	17.1	18.4	19.9	21.4	23.4	24.9	26.9	28.9	30.9	33.4	35.9	38.4	40.9	43.4	46.4	49.4	52	56	59	63	68
	12.8	14.1	15.4	16.6	17.9	19.4	20.9	22.9	24.4	26.4	28.4	30.4	32.9	35.4	37.9	40.4	42.9	45.9	48.9	52	55	59	63	68
2.04	...	...	...	...	...	...	...	13.1	14.7	16.7	18.8	20.8	23.3	25.8	28.4	30.9	33.4	36.4	39.4	42	46	49	53	58
2.08	12.3	13.6	14.8	16.1	17.3	18.9	20.4	22.4	23.9	25.9	27.9	29.9	32.4	34.9	37.4	39.9	42.4	45.4	48.4	51	55	58	62	67
	11.8	13.1	14.3	15.6	16.9	18.4	19.9	21.9	23.4	25.4	27.4	29.4	31.9	34.4	36.9	39.4	41.9	44.9	47.9	51	54	58	64	67
	.90	**.91**	**.92**	**.93**	**.94**	**.95**	**.97**	**.98**	**.99**	**1.00**	**1.01**	**1.02**	**1.03**	**1.05**	**1.06**	**1.07**	**1.08**	**1.09**	**1.10**	**1.11**	**1.12**	**1.13**	**1.14**	**1.15**
2.13	13.4	14.7	16.0	17.2	18.5	20.0	21.5	23.5	25.0	27.0	29.0	31.0	33.5	36.0	38.5	41.0	43.5	46.5	49.5	53	56	60	63	69
	...	...	9.9	11.2	12.4	14.0	15.5	17.5	19.0	21.1	23.1	25.1	27.6	30.1	32.6	35.1	37.6	40.7	43.7	47	50	54	58	63
2.16	13.0	14.3	15.5	16.8	18.0	19.5	21.0	23.0	24.5	26.5	28.5	30.6	33.1	35.6	38.1	40.6	43.1	46.1	49.1	52	56	59	63	68
	...	...	...	...	...	...	...	13.4	14.9	17.0	19.0	21.1	23.6	26.1	28.7	31.2	33.7	36.7	39.7	43	46	50	54	59
2.19	12.4	13.7	14.9	16.2	17.5	19.0	20.5	22.5	24.0	26.0	28.0	30.0	32.5	35.0	37.5	40.0	42.5	45.5	48.5	52	55	59	63	68
2.21	12.0	13.2	14.5	15.7	17.0	18.5	20.0	22.0	23.5	25.5	27.5	29.6	32.1	34.6	37.1	39.6	42.1	45.1	48.1	50	55	58	61	67
	10.6	11.9	13.2	14.4	15.7	17.2	18.7	20.7	22.2	24.3	26.3	28.3	30.8	33.3	35.8	38.3	40.8	43.8	46.8	50	53	57	61	66
2.24	...	...	10.0	11.3	12.6	14.1	15.7	17.7	19.2	21.2	23.3	25.3	27.8	30.3	32.8	35.3	37.8	40.8	43.9	47	50	54	58	63
2.29	13.1	14.4	15.6	16.9	18.1	19.6	21.1	23.1	24.7	26.7	28.7	30.7	33.2	35.7	38.2	40.7	43.2	46.2	49.2	52	56	59	63	68
2.32	12.1	13.3	14.6	15.9	17.1	18.6	20.1	22.1	23.6	25.7	27.7	29.7	32.2	34.7	37.2	39.7	42.2	45.2	48.2	51	55	58	62	67
2.34	...	...	...	...	...	...	11.6	13.7	15.3	17.3	19.4	21.4	24.0	26.5	29.0	31.5	34.1	37.1	40.1	43	47	50	54	59
2.35	12.6	13.8	15.1	16.3	17.6	19.1	20.6	22.6	24.1	26.1	28.1	30.1	32.6	35.2	37.7	40.2	42.7	45.7	48.7	52	55	59	63	68
2.36	...	...	...	...	...	...	...	...	...	...	...	...	...	...	...	...	20.8	24.0	27.1	30	34	37	41	46
2.37	...	8.9	10.2	11.5	12.8	14.3	15.9	17.9	19.4	21.4	23.4	25.5	28.0	30.5	33.0	35.5	38.0	41.0	44.0	47	51	54	58	63
2.38	...	...	...	...	...	...	...	...	...	...	...	15.3	18.0	20.6	23.2	25.7	28.3	31.3	34.4	37	41	44	48	54
2.41	10.8	12.1	13.4	14.7	15.9	17.4	18.9	21.0	22.5	24.5	26.5	28.5	31.0	33.5	36.0	38.5	41.0	44.0	47.0	50	54	57	61	66
2.48	12.7	13.9	15.2	16.5	17.7	19.2	20.7	22.7	24.2	26.2	28.3	30.3	32.8	35.3	37.8	40.3	42.8	45.8	48.8	52	55	59	63	68
2.49	12.2	13.5	14.7	16.0	17.3	18.8	20.3	22.3	23.8	25.8	27.8	29.8	32.3	34.8	37.3	39.8	42.3	45.3	48.3	51	55	58	62	67
2.51	...	...	...	...	...	...	11.9	14.0	15.5	17.6	19.7	21.7	24.3	26.8	29.3	31.8	34.4	37.4	40.4	43	47	50	54	59
	.89	**.90**	**.91**	**.92**	**.93**	**.95**	**.96**	**.97**	**.98**	**.99**	**1.01**	**1.02**	**1.03**	**1.04**	**1.05**	**1.06**	**1.07**	**1.08**	**1.10**	**1.11**	**1.12**	**1.13**	**1.14**	**1.15**
2.56	11.0	12.3	13.5	14.8	16.1	17.6	19.1	21.1	22.6	24.6	26.6	28.6	31.2	33.7	36.2	38.7	41.2	44.2	47.2	50	54	57	61	66
2.59	...	9.1	10.4	11.7	13.0	14.6	16.1	18.2	19.7	21.7	23.7	25.7	28.3	30.8	33.3	35.8	38.3	41.3	44.3	47	51	54	58	63
2.63	12.3	13.6	14.9	16.1	17.4	18.9	20.4	22.4	23.9	25.9	27.9	29.9	32.4	34.9	37.4	39.9	42.5	45.5	48.5	51	55	58	62	67
2.66	...	...	...	...	...	...	12.1	14.2	15.7	17.8	19.9	21.9	24.5	27.0	29.5	32.1	34.6	37.6	40.6	44	47	51	55	60
2.69	11.1	12.4	13.6	14.9	16.2	17.7	19.2	21.2	22.7	24.7	26.7	28.8	31.3	33.8	36.3	38.8	41.3	44.3	47.3	50	54	57	61	66
2.77	...	...	...	...	...	...	...	...	...	...	...	16.0	18.7	21.3	23.9	26.5	29.0	32.1	35.1	38	42	45	49	54
2.82	...	...	...	...	...	...	12.3	14.4	16.0	18.0	20.1	22.1	24.7	27.2	29.7	32.3	34.8	37.8	40.8	44	47	51	55	60
2.89	11.2	12.5	13.8	15.0	16.3	17.8	19.3	21.4	22.9	24.9	26.9	28.9	31.4	33.9	36.4	38.9	41.4	44.4	47.5	50	54	57	61	66
2.93	...	9.4	10.8	12.1	13.4	14.9	16.4	18.5	20.0	22.0	24.1	26.1	28.6	31.1	33.6	36.1	38.7	41.7	44.7	48	51	55	59	64
2.94	...	...	...	...	...	...	...	...	...	...	...	16.3	19.0	21.6	24.2	26.8	29.3	32.4	35.4	38	42	46	50	55
2.97	...	...	...	...	...	...	12.4	14.5	16.1	18.2	20.3	22.3	24.9	27.4	29.9	32.5	35.0	38.0	41.0	44	48	51	55	60
3.06	11.3	12.6	13.9	15.1	16.4	17.9	19.5	21.5	23.0	25.0	27.0	29.0	31.5	34.0	36.5	39.0	41.6	44.6	47.6	51	54	58	62	67
3.13	...	...	...	...	...	10.9	12.6	14.7	16.3	18.4	20.4	22.5	25.0	27.6	30.1	32.6	35.2	38.2	41.2	44	48	51	55	60
	.87	**.89**	**.90**	**.91**	**.92**	**.94**	**.95**	**.96**	**.97**	**.99**	**1.00**	**1.01**	**1.02**	**1.04**	**1.05**	**1.06**	**1.07**	**1.08**	**1.09**	**1.10**	1.11	1.12	1.14	1.15

Arc & Length Factors are approximate values

Refer to Selection Procedure for more precise values

NOTE: Selection program VIA-VISA available at www.ptwizard.com.

SELECTION

3VX STOCK DRIVE SELECTIONS

Speed Ratio	Stock Sheaves Outside Diam. Driver	Stock Sheaves Outside Diam. Driven	3500 RPM Driver Driven RPM	3500 RPM Driver HP/Belt 3VX	1750 RPM Driver Driven RPM	1750 RPM Driver HP/Belt 3VX	1160 RPM Driver Driven RPM	1160 RPM Driver HP/Belt 3VX	Belt Number and Approx. Center Distance 3VX 425	3VX 450	3VX 475	3VX 500
3.14	8.00	25.00	1115	18.09	558	10.94	370	7.67	...	...	...	...
3.17	10.60	33.50	1104	21.52	552	14.52	366	10.33	...	...	...	...
3.18	6.00	19.00	1099	13.84	549	7.94	364	5.52	...	...	...	...
3.20	3.35	10.60	1095	6.56	547	3.65	363	2.54	9.6	10.9	12.3	13.6
3.40	3.15	10.60	1028	5.95	514	3.31	341	2.31	9.7	11.1	12.4	13.7
3.41	5.60	19.00	1025	12.85	513	7.31	340	5.08	...	...	...	...
3.43	4.12	14.00	1021	8.85	511	4.93	338	3.42	...	...	...	...
3.58	3.00	10.60	979	5.49	489	3.05	324	2.13	9.8	11.2	12.5	13.8
3.61	5.30	19.00	970	12.09	485	6.84	321	4.75	...	...	...	...
3.64	6.90	25.00	961	15.91	480	9.32	318	6.50	...	...	...	...
3.83	5.00	19.00	914	11.29	457	6.36	303	4.42	...	...	...	...
3.84	2.80	10.60	912	4.86	456	2.71	302	1.90	10.0	11.3	12.6	13.9
ARC-LENGTH CORRECTION FACTOR —>									**.88**	**.89**	**.91**	**.92**
3.87	6.50	25.00	905	15.02	452	8.71	300	6.07	...	...	...	...
3.88	3.65	14.00	903	7.47	452	4.15	299	2.89	...	...	...	...
4.03	4.75	19.00	868	10.62	434	5.96	288	4.14	...	...	...	...
4.06	2.65	10.60	863	4.39	431	2.46	286	1.72	10.1	11.4	12.7	14.0
4.19	6.00	25.00	835	13.85	417	7.94	277	5.52	...	...	...	...
4.21	8.00	33.50	832	18.09	416	10.95	276	7.67	...	...	...	...
4.23	3.35	14.00	828	6.57	414	3.65	274	2.54	...	...	...	10.0
4.26	4.50	19.00	822	9.93	411	5.55	272	3.86	...	...	...	...
4.50	3.15	14.00	778	5.96	389	3.31	258	2.31	...	...	...	10.1
	5.60	25.00	779	12.86	389	7.31	258	5.08	...	...	...	...
4.66	4.12	19.00	752	8.85	376	4.93	249	3.42	...	...	...	...
4.73	3.00	14.00	740	5.49	370	3.06	245	2.13	...	...	...	10.2
4.75	5.30	25.00	736	12.09	368	6.84	244	4.75	...	...	...	...
4.88	6.90	33.50	717	15.91	358	9.32	238	6.50	...	...	...	...
5.04	5.00	25.00	694	11.30	347	6.36	230	4.42	...	...	...	...
5.07	2.80	14.00	690	4.87	345	2.72	229	1.90	...	...	...	10.3
5.19	6.50	33.50	675	15.02	337	8.71	224	6.07	...	...	...	...
5.26	3.65	19.00	665	7.47	332	4.15	220	2.89	...	...	...	...
5.31	4.75	25.00	659	10.62	330	5.96	219	4.14	...	...	...	...
5.37	2.65	14.00	652	4.39	326	2.46	216	1.72	...	...	...	10.4
ARC-LENGTH CORRECTION FACTOR —>									**.80**	**.83**	**.85**	**.87**
5.61	4.50	25.00	624	9.93	312	5.55	207	3.86	...	...	...	...
5.62	6.00	33.50	623	13.85	311	7.94	206	5.52	...	...	...	...
5.74	3.35	19.00	609	6.57	305	3.65	202	2.54	...	...	...	...
6.03	5.60	33.50	581	12.86	290	7.32	192	5.08	...	...	...	...
6.11	3.15	19.00	573	4.91	286	2.84	190	2.31	...	...	...	...
6.13	4.12	25.00	571	8.85	285	4.93	189	3.43	...	...	...	...
6.37	5.30	33.50	549	12.09	275	6.84	182	4.75	...	...	...	...
6.42	3.00	19.00	545	5.49	272	3.06	181	2.13	...	...	...	...
6.76	5.00	33.50	518	11.30	259	6.36	172	4.42	...	...	...	...
6.89	2.80	19.00	508	4.87	254	2.72	168	1.90	...	...	...	...
6.93	3.65	25.00	505	7.48	253	4.15	167	2.89	...	...	...	...
7.12	4.75	33.50	492	10.62	246	5.96	163	4.14	...	...	...	...
7.29	2.65	19.00	480	4.39	240	2.46	159	1.72	...	...	...	...
7.52	4.50	33.50	466	9.93	233	5.56	154	3.86	...	...	...	...
7.56	3.35	25.00	463	6.57	231	3.65	153	2.54	...	...	...	...
8.05	3.15	25.00	435	5.96	217	3.31	144	2.31	...	...	...	...
8.22	4.12	33.50	426	8.85	213	4.93	141	3.43	...	...	...	...
8.46	3.00	25.00	414	5.50	207	3.06	137	2.13	...	...	...	...
9.07	2.80	25.00	386	4.87	193	2.72	128	1.90	...	...	...	...
9.29	3.65	33.50	377	7.48	188	4.15	125	2.89	...	...	...	...
ARC-LENGTH CORRECTION FACTOR —>									**...**	**...**	**...**	**...**
9.60	2.65	25.00	365	4.39	182	2.46	121	1.72	...	...	...	...
10.14	3.35	33.50	345	6.57	173	3.65	114	2.54	...	...	...	...
10.79	3.15	33.50	324	5.96	162	3.31	108	2.31	...	...	...	...
11.34	3.00	33.50	309	5.50	154	3.06	102	2.13	...	...	...	...
12.16	2.80	33.50	288	4.87	144	2.72	95	1.90	...	...	...	...
12.87	2.65	33.50	272	4.39	136	2.46	90	1.72	...	...	...	...
ARC-LENGTH CORRECTION FACTOR —>									**...**	**...**	**...**	**...**

*** Note: Stock belt sizes 3VX250 thru 3VX400 not shown**

NOTE: Selection program VIA-VISA available at www.ptwizard.com.

DODGE®

3VX STOCK DRIVE SELECTIONS

Speed Ratio	Belt Number and Approx. Center Distance																		
	3VX 530	3VX 560	3VX 600	3VX 630	3VX 670	3VX 710	3VX 750	3VX 800	3VX 850	3VX 900	3VX 950	3VX 1000	3VX 1060	3VX 1120	3VX 1180	3VX 1250	3VX 1320	3VX 1400	3VX 1500
3.14	...	...	...	...	...	...	...	...	...	...	19.8	22.5	25.7	28.8	32.0	35.6	39	43	48
3.17	...	...	...	...	...	...	...	...	...	...	...	...	...	...	...	25.3	29	33	39
3.18	...	...	...	...	...	14.4	16.6	19.3	21.9	24.5	27.1	29.7	32.7	35.8	38.8	42.4	46	50	55
3.20	15.1	16.7	18.7	20.2	22.3	24.3	26.3	28.8	31.3	33.9	36.4	38.9	41.9	44.9	47.9	51.4	55	59	64
3.40	15.2	16.8	18.8	20.4	22.4	24.4	26.4	29.0	31.5	34.0	36.5	39.0	42.0	45.1	48.1	51.6	55	59	64
3.41	...	...	...	...	...	14.7	16.9	19.5	22.2	24.8	27.4	29.9	33.0	36.1	39.1	42.7	46	50	55
3.43	11.2	12.8	15.0	16.5	18.6	20.7	22.7	25.3	27.8	30.4	32.9	35.4	38.5	41.5	44.5	48.0	52	56	61
3.58	15.3	16.9	18.9	20.5	22.5	24.5	26.6	29.1	31.6	34.1	36.6	39.1	42.2	45.2	48.2	51.7	55	59	64
3.61	...	...	...	...	...	14.8	17.0	19.7	22.4	25.0	27.6	30.1	33.2	36.3	39.3	42.9	46	50	56
3.64	...	...	...	...	...	...	...	...	...	17.6	20.5	23.2	26.4	29.6	32.7	36.3	40	44	49
3.83	...	...	...	...	...	15.0	17.2	19.9	22.6	25.2	27.8	30.4	33.4	36.5	39.5	43.1	47	51	56
3.84	15.5	17.0	19.1	20.6	22.6	24.7	26.7	29.2	31.7	34.3	36.8	39.3	42.3	45.3	48.3	51.8	55	59	64
	.93	**.94**	**.95**	**.97**	**.98**	**.99**	**1.00**	**1.02**	**1.03**	**1.04**	**1.05**	**1.06**	**1.08**	**1.09**	**1.10**	**1.11**	**1.12**	**1.13**	**1.14**
3.87	...	...	...	...	...	...	...	...	...	17.9	20.7	23.4	26.7	29.8	33.0	36.6	40	44	49
3.88	11 5	13.1	15.3	16.9	18.9	21.0	23.1	25.6	28.2	30.7	33.2	35.8	38.8	41.8	44.8	48.4	52	56	61
4.03	...	...	...	...	...	15.2	17.4	20.1	22.7	25.4	27.9	30.5	33.6	36.7	39.7	43.3	47	51	56
4.06	15.6	17.1	19.2	20.7	22.8	24.8	26.8	29.3	31.9	34.4	36.9	39.4	42.4	45.4	48.4	51.9	55	59	64
4.19	...	...	...	...	...	...	...	...	...	18.2	21.0	23.8	27.0	30.2	33.3	36.9	41	45	50
4.21	...	...	...	...	...	...	...	...	...	...	...	...	...	...	22.9	26.9	31	35	44
4.23	11.7	13.3	15.5	17.0	19.1	21.2	23.3	25.8	28.4	30.9	33.5	36.0	39.0	42.0	45.1	48.6	52	56	61
4.26	...	...	...	...	...	15.3	17.6	20.3	22.9	25.5	28.1	30.7	33.8	36.8	39.9	43.4	47	51	56
4.50	11.8	13.4	15.6	17.2	19.3	21.3	23.4	26.0	28.5	31.1	33.6	36.1	39.2	42.2	45.2	48.7	52	46	61
	...	...	...	...	...	...	...	...	...	18.4	21.3	24.0	27.3	30.4	33.6	37.2	41	45	50
4.66	...	...	...	...	13.3	15.6	17.8	20.5	23.2	25.8	28.4	31.0	34.0	37.1	40.2	43.7	47	51	56
4.73	...	13.5	15.7	17.3	19.4	21.4	23.5	26.1	28.6	31.2	33.7	36.2	39.3	42.3	45.3	48.8	52	56	61
4.75	...	...	...	...	...	...	...	...	...	18.6	21.5	24.2	27.4	30.6	33.8	37.4	41	45	50
4.88	...	...	...	...	...	...	...	...	...	...	...	...	...	...	23.5	27.6	31	36	41
5.04	...	...	...	...	...	...	...	...	...	18.8	21.6	24.4	27.6	30.8	34.0	37.6	41	45	50
5.07	12.0	13.7	15.8	17.4	19.5	21.6	23.6	26.2	28.8	31.3	33.8	36.4	39.4	42.4	45.5	49.0	53	57	62
5.19	...	...	...	...	...	...	...	...	...	...	...	...	...	...	23.8	27.8	32	36	41
5.26	...	...	...	...	13.5	15.9	18.1	20.8	23.5	26.1	28.7	31.3	34.4	37.4	40.5	44.1	48	52	57
5.31	...	...	...	...	...	...	...	...	...	18.9	21.8	24.6	27.8	31.0	34.1	37.8	41	46	51
5.37	12.1	13.8	15.9	17.5	19.6	21.7	23.8	26.3	28.9	31.4	34.0	36.5	39.5	42.6	45.6	49.1	53	57	62
	.89	**.91**	**.93**	**.94**	**.96**	**.97**	**.99**	**1.00**	**1.02**	**1.03**	**1.04**	**1.05**	**1.07**	**1.08**	**1.09**	**1.10**	**1.11**	**1.12**	**1.13**
5.61	...	...	...	...	...	...	...	...	...	19.1	21.9	24.7	28.0	31.2	34.3	38.0	42	46	51
5.62	...	...	...	...	...	...	...	...	...	...	...	...	...	...	24.1	28.1	32	36	42
5.74	...	...	...	...	13.7	16.0	18.3	21.0	23.7	26.3	28.9	31.5	34.6	37.6	40.7	44.3	48	52	57
6.03	...	...	...	...	...	...	...	...	...	...	...	...	...	...	24.3	28.4	32	37	42
6.11	...	...	...	...	13.8	16.2	18.4	21.1	23.8	26.4	29.0	31.6	34.7	37.8	40.8	44.4	48	52	57
6.13	...	...	...	...	...	...	...	...	16.3	19.3	22.2	25.0	28.2	31.4	34.6	38.2	42	46	41
6.37	...	...	...	...	...	...	...	...	...	...	...	...	...	...	24.5	28.6	32	39	42
6.42	...	...	...	...	13.9	16.3	18.5	21.2	23.9	26.5	29.1	31.7	34.8	37.9	40.9	44.5	48	52	57
6.76	...	...	...	...	...	...	...	...	...	...	...	...	...	20.9	24.7	28.7	33	37	42
6.89	...	...	...	...	14.1	16.4	18.6	21.4	24.0	26.7	29.3	31.9	34.9	38.0	41.1	44.7	48	52	57
6.93	...	...	...	...	...	...	...	...	16.6	19.6	22.5	25.3	28.5	31.7	34.9	38.5	42	46	51
7.12	...	...	...	...	...	...	...	...	...	...	...	...	...	21.1	24.8	28.9	33	37	43
7.29	...	...	...	...	14.1	16.5	18.7	21.4	24.1	26.8	29.4	32.0	35.1	38.1	41.2	44.8	48	52	57
7.52	...	...	...	...	...	...	...	...	...	...	...	...	...	21.2	25.0	29.1	33	37	43
7.56	...	...	...	...	...	...	...	...	16.7	19.8	22.7	25.4	28.7	31.9	35.1	38.7	42	46	52
8.05	...	...	...	...	...	...	...	...	16.9	19.9	22.8	25.6	28.8	32.0	35.2	38.9	42	47	52
8.22	...	...	...	...	...	...	...	...	...	...	...	...	...	21.4	25.2	29.3	33	38	43
8.46	...	...	...	...	...	...	...	...	17.0	20.0	22.9	25.7	28.9	32.1	35.3	39.0	43	47	52
9.07	...	...	...	...	...	...	...	...	17.1	20.1	23.0	25.8	29.1	32.3	35.4	39.1	43	47	52
9.29	...	...	...	...	...	...	...	...	...	...	...	...	...	21.7	25.5	29.6	34	38	43
	...	**...**	**...**	**...**	**.79**	**.84**	**.88**	**.91**	**.94**	**.96**	**.98**	**1.00**	**1.02**	**1.04**	**1.05**	**1.07**	**1.08**	**1.09**	**1.10**
9.60	...	...	...	...	...	...	...	...	17.2	20.2	23.1	25.9	29.2	32.4	35.5	39.2	43	47	52
10.14	...	...	...	...	...	...	...	...	...	...	...	...	...	21.9	25.6	29.8	34	38	43
10.79	...	...	...	...	...	...	...	...	...	...	...	...	...	22.0	25.8	29.9	34	38	44
11.34	...	...	...	...	...	...	...	...	...	...	...	...	...	22.1	25.8	30.0	34	38	44
12.16	...	...	...	...	...	...	...	...	...	...	...	...	...	22.2	26.0	30.1	34	38	44
12.87	...	...	...	...	...	...	...	...	...	...	...	...	...	22.3	26.1	30.2	34	39	4
	...	**...**	**...**	**...**	**...**	**...**	**...**	**...**	**...**	**...**	**...**	**...**	**...**	**.78**	**.86**	**.92**	**.96**	**1.00**	**1.01**

Arc & Length Factors are approximate values
Refer to Selection Procedure for more precise values
NOTE: Selection program VIA-VISA available at www.ptwizard.com.

SELECTION

DODGE®

5VX	D-V Wedge Single Belts to 200” POLYBAND to 200”

5V	D-V Wedge Single Belts over 200” POLYBAND over 200”

STOCK DRIVE SELECTION

Ratio	Stock Sheaves Diameter		1750 RPM Driver			1160 RPM Driver			870 RPM Driver			Belt Number and Approx. Center Distance**							
			Driven	HP/Belt		Driven	HP/Belt		Driven	HP/Belt		5VX	5VX	5VX	5VX	5VX	5VX	5VX	5VX
	Driver	Driven	RPM	5VX	5V	RPM	5VX	5V	RPM	5VX	5V	500	560	600	630	670	710	750	800
1.00	4.40	4.40	1750	8.2	3.9	1160	5.9	3.1	870	5.6	2.6	18.1	21.1	23.1	24.6	26.6	28.6	30.6	33.1
	4.65	4.65	1750	9.4	5.0	1160	6.1	3.9	870	5.3	3.2	17.7	20.7	22.7	24.2	26.2	28.2	30.2	32.7
	4.90	4.90	1750	10.6	6.2	1160	7.5	4.7	870	5.9	3.8	17.3	20.3	22.3	23.8	25.8	27.8	29.8	32.3
	5.20	5.20	1750	11.9	7.5	1160	8.5	5.6	870	6.6	4.5	16.8	19.8	21.8	23.3	25.3	27.3	29.3	31.8
	5.50	5.50	1750	13.3	8.8	1160	9.4	6.6	870	7.3	5.2	16.4	19.4	21.4	22.9	24.9	26.9	28.9	31.4
	5.90	5.90	1750	15.1	10.6	1160	10.7	7.8	870	8.3	6.2	15.7	18.7	20.7	222	24.2	26.2	28.2	30.7
	6.30	6.30	1750	16.9	12.6	1160	11.9	9.0	870	9.3	7.1	15.1	18.1	20.1	21.6	23.6	25.6	27.6	30.1
	6.70	6.70	1750	18.7	13.9	1160	13.2	10.2	870	10.4	8.1	14.5	17.5	19.5	21.0	23.0	25.0	27.0	29.5
	7.10	7.10	1750	20.4	15.6	1160	14.4	11.4	870	11.0	9.0	13.9	16.8	18.8	20.3	22.3	24.3	26.3	28.8
	7.50	7.50	1750	22.1	17.2	1160	15.6	12.6	870	12.2	9.9	13.2	16.2	18.2	19.7	21.7	23.7	25.7	28.2
	8.00	8.00	1750	24.3	19.2	1160	17.0	14.1	870	13.3	11.1	12.4	15.4	17.4	18.9	20.9	22.9	24.9	27.4
	8.50	8.50	1750	26.4	21.2	1160	18.7	15.5	870	14.0	12.2	11.7	14.6	16.6	18.1	20.1	22.1	24.1	26.6
	9.00	9.00	1750	28.4	23.0	1160	20.1	17.0	870	15.7	13.4	10.9	13.9	15.9	17.4	19.4	21.4	23.4	25.9
	9.25	9.25	1750	29.4	24.0	1160	20.9	17.7	870	16.4	13.9	10.5	13.5	15.5	17.0	19.0	21.0	23.0	25.5
	9.75	9.75	1750	31.4	25.8	1160	22.4	19.1	870	17.4	15.1	...	12.7	14.7	16.2	18.2	20.2	22.2	24.7
	10.30	10.30	1750	33.6	27.7	1160	24.0	20.6	870	18.6	16.3	...	11.8	13.8	15.3	17.3	19.3	21.3	23.8
	10.90	10.90	1750	35.9	29.7	1160	25.7	22.2	870	20.2	17.6	...	...	12.9	14.4	16.4	18.4	20.4	22.9
	11.30	11.30	1750	37.4	31.0	1160	26.8	23.3	870	20.9	18.5	...	...	...	13.8	15.8	17.8	19.8	22.3
	11.80	11.80	1750	39.3	32.6	1160	28.2	24.6	870	22.0	19.5	...	...	...	...	15.0	17.0	19.0	21.5
	12.50	12.50	1750	41.8	34.7	1160	30.2	26.4	870	23.6	21.0	...	...	...	...	...	15.9	17.9	20.4
	13.20	13.20	1750	44.2	38.7	1160	31.1	28.2	870	25.1	22.5	...	...	...	...	...	...	16.8	19.3
	14.00	14.00	1750	46.9	38.8	1160	34.3	30.2	870	26.9	24.1	...	...	...	...	...	...	...	18.0
	15.00	15.00	1750	...	...	1160	...	...	870	29.0	26.2	...	...	...	...	...	...	...	...
	16.00	16.00	1750	...	...	1160	...	...	870	31.1	28.1	...	...	...	...	...	...	...	...
1.03	9.00	9.25	1702	28.6	23.3	1128	20.3	17.1	845	15.7	13.5	1.07	13.7	15.7	17.2	19.2	21.2	23.2	25.7
1.04	10.90	11.30	1688	36.1	30.1	1119	25.8	22.4	837	20.1	17.7	...	...	12.6	14.1	16.1	18.1	20.1	22.6
	11.30	11.80	1675	37.7	31.4	1110	27.0	23.5	837	21.0	18.6	...	...	...	...	15.4	17.4	19.4	21.9
1.05	4.65	4.90	1659	9.7	5.4	1100	6.9	4.2	829	5.4	3.4	17.5	20.5	22.5	24.0	26.0	28.0	30.0	32.5
	9.25	9.75	1659	29.8	24.4	1100	21.1	17.9	829	16.4	14.1	...	13.1	15.1	16.6	18.6	20.6	22.6	25.1
1.06	4.40	4.65	1654	8.6	4.3	1096	6.1	3.4	821	4.8	2.8	17.9	20.9	22.9	24.4	26.4	28.4	30.4	32.9
	4.90	5.20	1654	10.9	6.6	1096	7.7	5.0	821	6.1	4.0	17.1	20.1	22.1	23.6	56.6	27.6	29.6	32.1
	5.20	5.50	1653	12.3	7.9	1092	8.7	5.9	821	6.8	4.7	16.6	19.6	21.6	23.1	25.1	27.1	29.1	31.6
	6.30	6.70	1644	17.3	12.8	1090	12.2	9.3	821	9.5	7.4	14.8	17.8	19.8	21.3	23.3	25.3	27.3	29.8
	6.70	7.10	1650	19.0	14.4	1094	13.4	10.5	821	10.4	8.3	14.2	17.2	19.2	20.7	22.7	24.7	26.7	29.2
	7.10	7.50	1655	20.7	16.0	1097	14.6	11.7	821	11.4	9.3	13.5	16.5	18.5	20.0	22.0	24.0	26.0	28.5
	8.00	8.50	1646	24.6	19.7	1091	17.4	14.4	821	13.5	11.3	12.0	15.0	17.0	18.5	20.5	22.5	24.5	27.0
	8.50	9.00	1652	26.7	21.6	1095	18.9	15.8	821	14.7	12.5	11.3	14.3	16.3	17.8	19.8	21.8	23.8	26.3
	9.75	10.30	1656	31.8	26.2	1097	22.6	19.4	821	17.6	15.3	...	12.2	14.3	15.8	17.8	19.8	21.8	24.3
	10.30	10.90	1653	33.9	28.2	1096	24.2	20.9	821	18.8	16.5	...	...	13.3	14.8	16.8	18.8	20.8	23.3
	11.80	12.50	1651	39.6	33.1	1095	28.5	24.9	821	22.2	19.8	...	...	...	...	14.4	16.4	18.4	20.9
	12.50	13.20	1656	42.1	35.1	1098	30.4	26.7	821	23.8	21.3	...	...	...	...	...	15.3	17.3	19.8
	13.20	14.00	1649	44.6	37.1	1093	32.4	28.5	821	25.3	22.7	...	...	...	...	...	...	16.1	18.6
ARC-LENGTH CORRECTION FACTOR —>												.85	.87	.88	.89	.90	.91	.92	.93
1.07	5.50	5.90	3259	13.7	9.4	1080	9.7	6.9	813	7.6	5.5	16.0	19.0	21.0	22.5	24.5	26.5	28.5	31.0
	5.90	6.30	1629	15.5	11.1	1085	10.9	8.1	813	8.5	6.4	15.4	18.4	20.4	21.9	23.9	25.9	27.9	30.4
	7.50	8.00	1637	22.5	17.7	1087	15.9	12.9	813	12.3	10.2	12.8	15.8	17.8	19.3	21.3	23.3	25.3	27.8
	14.00	15.00	1639	47.0	39.3	1082	34.6	30.5	813	27.1	24.4	...	...	...	...	...	...	...	17.2
	15.00	16.00	1633	...	...	1087	37.2	32.9	813	29.2	26.4	...	...	...	...	...	...	...	...
1.08	9.00	9.75	1640	28.9	23.6	1070	20.5	17.3	806	15.9	13.7	..	13.3	15.3	16.8	18.8	20.8	22.8	25.3
	10.90	11.80	1614	36.4	30.3	1071	26.0	22.6	806	20.3	17.9	...	...	...	13.7	15.7	17.7	19.7	22.2
1.09	8.50	9.25	1615	26.8	21.8	1065	19.0	16.0	798	14.7	12.6	11.1	14.1	16.1	17.6	19.6	21.6	23.6	26.1
1.10	10.30	11.30	1607	34.1	28.4	1056	24.3	21.1	791	18.9	16.6	...	...	13.0	14.5	16.5	18.5	20.5	23.0
1.11	9.25	10.30	1594	30.3	24.7	1041	21.3	18.2	784	16.5	14.3	...	12.6	14.6	16.1	18.1	20.1	22.1	24.6
	11.30	12.50	1570	38.0	31.8	1048	27.2	23.8	784	21.2	18.8	...	...	...	...	14.8	16.8	18.8	21.3
1.12	4.40	4.90	1581	8.8	4.7	1039	6.3	3.6	777	4.9	3.0	17.7	20.7	22.7	24.2	26.2	28.2	30.2	32.7
	4.65	5.20	1568	10.0	5.8	1035	7.1	4.4	777	5.6	3.6	17.3	20.3	22.3	23.8	25.8	27.8	29.8	32.3
	6.70	7.50	1561	19.3	14.7	1035	13.6	10.7	777	10.6	8.5	13.8	16.8	18.8	20.3	22.3	24.3	26.3	28.9
	9.75	10.90	1561	32.0	26.6	1036	22.8	19.6	777	17.7	15.4	...	...	13.8	15.3	17.3	19.3	21.3	23.8
	11.80	13.20	1564	39.9	33.4	1036	28.6	25.1	777	22.3	19.9	...	...	...	...	13.9	15.8	17.9	20.4
	12.50	14.00	1563	42.4	35.5	1035	30.6	27.0	777	23.9	21.4	...	...	...	...	...	14.7	16.7	19.2

NOTE: * 5VX = Single and Polyband belts to 200” length
5V = Single and Polyband belts over 200” long

** Stock belt size 5VX530 not shown

NOTE: Selection program VIA-VISA available at www.ptwizard.com.

DODGE®

5VX	D-V Wedge Single Belts to 200” POLYBAND to 200”

5V	D-V Wedge Single Belts over 200” POLYBAND over 200”

STOCK DRIVE SELECTION

Ratio	Belt Number and Approx. Center Distance**																						
	5VX 850	5VX 900	5VX 950	5VX 1000	5VX 1060	5VX 1120	5VX 1180	5VX 1250	5VX 1320	5VX 1400	5VX 1500	5VX 1600	5VX 1700	5VX 1800	5VX 1900	5VX 2000	5V 2120	5V 2240	5V 2360	5V 2500	5V 2800	5V 3150	5V 3550
1.00	35.6	38.1	40.6	43.1	46.1	49.1	52.1	55.6	59.1	63.1	68	73	78	83	88	93	99	105	111	118	133	151	171
	35.2	37.7	40.2	42.7	45.7	48.7	51.7	552	58.7	62.7	68	73	78	83	88	93	99	105	111	118	133	150	170
	34.8	37.3	39.8	42.3	45.3	48.3	51.3	54.8	58.3	62.3	67	72	77	82	87	92	98	104	110	117	132	1550	170
	34.3	36.8	39.3	41.8	44.8	47.8	50.8	54.3	57.8	61.8	67	72	7	82	87	92	98	104	110	117	132	149	169
	33.9	36.4	38.9	41.4	44.4	47.4	50.4	53.9	57.4	61.4	66	71	76	81	86	91	97	103	109	116	131	149	169
	33.2	35.7	38.2	40.7	43.7	46.7	49.7	53.2	56.7	60.7	66	71	76	81	86	91	97	103	109	116	131	148	168
	32.6	35.1	37.6	40.1	43.1	46.1	49.1	52.6	56.1	60.1	65	70	75	80	85	90	96	102	108	115	130	148	168
	32.0	34.5	37.0	39.5	42.5	45.5	48.5	52.0	55.5	59.5	64	69	74	79	84	89	95	101	107	115	129	147	167
	31.3	33.8	36.3	38.8	41.8	44.8	47.8	51.3	54.8	58.8	64	69	74	79	84	89	95	101	107	114	129	146	168
	30.7	33.2	35.7	38.2	41.2	44.2	47.2	50.7	54.2	58.2	63	68	73	78	83	88	94	100	106	113	128	146	166
	29.9	32.4	34.9	37.4	40.4	43.4	46.4	49.9	53.4	57.4	62	67	72	77	82	87	93	99	105	112	127	150	165
	29.1	31.6	34.1	38.6	39.6	42.6	45.6	49.1	52.6	56.6	62	67	72	77	82	89	93	99	105	112	127	144	164
	28.4	30.9	33.4	35.9	38.9	41.9	44.9	48.4	51.9	55.9	61	66	71	76	81	86	92	98	104	111	126	143	163
	28.0	30.5	33.0	35.5	38.5	41.5	44.5	48.0	51.5	55.5	60	65	71	75	80	85	91	97	103	111	125	143	163
	27.2	29.7	32.2	34.7	37.7	40.7	43.7	47.2	50.7	54.7	60	65	70	75	80	85	91	97	102	110	124	143	162
	26.3	28.8	31.3	33.8	38.8	39.8	42.8	46.3	49.8	53.8	59	64	69	74	79	84	90	96	102	109	124	141	161
	25.4	27.9	30.4	32.9	35.9	38.9	41.9	45.4	48.9	52.9	58	63	68	73	78	83	89	95	1010	107	123	140	160
	24.8	27.3	29.8	32.3	35.3	38.3	41.3	44.8	48.3	52.3	57	62	67	72	77	82	88	94	100	107	122	140	160
	24.0	26.5	29.0	31.5	34.5	37.5	40.5	44.0	47.5	51.5	56	61	66	72	76	81	87	93	99	106	121	139	159
	22.9	25.4	27.9	30.4	33.4	36.4	39.4	42.9	46.4	50.4	55	60	65	70	75	80	86	92	98	105	120	138	158
	21.8	24.3	26.8	29.3	32.3	35.3	38.3	41.8	45.3	49.3	54	59	64	69	74	79	85	91	97	104	119	137	157
	20.5	23.0	25.5	28.0	31.0	34.0	37.0	40.5	44.0	48.0	53	58	63	68	73	78	84	90	96	103	118	136	155
	19.0	21.4	23.9	26.4	29.4	32.4	35.4	38.9	42.4	46.4	51	56	61	66	71	76	82	88	94	101	116	134	154
	...	19.9	22.4	24.9	27.9	30.9	33.9	37.4	40.9	44.9	50	55	60	645	70	75	81	87	93	100	115	132	152
1.03	28.2	30.7	33.2	35.7	38.7	41.7	44.7	48.2	51.7	55.7	61	66	71	76	81	86	92	98	104	111	126	143	163
1.04	25.1	27.6	30.1	32.6	35.6	38.6	41.6	45.1	48.6	52.6	58	63	68	73	78	83	89	95	101	108	123	140	160
	24.4	26.9	29.4	31.9	34.9	37.9	40.9	44.4	47.9	51.9	57	62	67	72	77	81	88	94	100	107	122	139	159
1.05	35.0	37.5	40.0	42.5	45.5	48.5	51.5	55.0	58.5	62.5	68	72	77	82	87	92	98	104	110	117	132	150	170
	27.6	30.1	32.6	35.1	38.1	41.1	44.1	47.6	51.1	55.1	60	65	70	75	80	85	91	97	103	110	125	143	163
1.06	35.4	37.9	40.4	42.9	45.9	48.9	51.9	55.4	58.9	62.9	68	73	78	83	88	93	99	105	111	118	133	150	170
	34.6	3438	37.3	39.8	42.8	45.8	48.8	52.3	55.8	59.5	65	70	75	80	85	90	96	102	108	115	130	147	167
	34.1	36.6	39.1	41.6	44.6	47.6	50.6	54.1	57.6	61.6	67	72	77	82	87	92	98	104	110	117	132	149	169
	32.3	37.1	39.6	42.1	45.1	4831	51.1	54.6	58.1	62.1	67	72	77	82	87	92	98	104	110	117	132	150	170
	31.7	34.2	36.7	39.2	42.2	45.2	48.2	51.7	55.2	59.2	64	69	74	79	84	89	95	101	107	114	129	147	167
	31.0	33.5	38.0	38.5	41.5	44.5	47.5	51.0	54.5	58.5	64	68	74	78	83	88	94	100	106	113	128	146	166
	29.5	32.0	34.5	37.0	40.0	43.0	46.0	49.5	53.0	57.0	62	67	72	77	82	87	93	99	105	112	127	144	164
	28.8	31.3	33.8	36.3	39.3	42.3	45.3	46.8	52.3	56.3	61	66	71	76	81	86	92	98	104	111	126	144	164
	26.8	29.3	31.8	34.3	37.3	40.3	43.3	46.8	50.3	54.3	59	64	69	74	79	84	90	96	102	109	124	142	162
	25.9	28.3	30.8	33.3	35.3	39.3	42.3	45.8	49.3	53.3	58	63	68	73	78	83	89	95	101	108	123	141	161
	23.4	25.9	28.4	30.9	33.9	36.9	39.9	43.4	46.9	50.9	56	61	66	71	76	81	87	93	99	106	121	138	158
	22.3	24.8	27.3	29.8	32.8	35.8	38.8	42.3	45.8	49.8	55	60	65	70	75	80	86	92	98	105	120	137	157
	21.1	23.6	26.1	28.6	31.6	34.6	37.6	41.1	44.6	48.6	54	59	64	69	74	79	85	91	97	104	119	36	156
	.94	.95	.95	.96	.97	.98	.99	1.00	1.01	1.02	1.03	1.04	1.05	1.06	1.07	1.08	1.09	1.09	1.10	1.11	1.13	1.15	1.17
1.07	33.6	36.0	38.5	41.0	44.0	47.0	50.0	53.5	57.0	61.0	66	71	76	81	86	91	97	103	109	116	131	147	169
	32.9	35.4	37.9	40.4	43.4	46.4	49.4	52.9	56.4	60.4	65	70	75	80	85	90	96	102	108	115	130	148	168
	30.3	32.8	35.3	37.8	40.8	43.8	46.8	50.3	53.8	57.8	63	68	73	78	83	88	94	100	106	113	128	145	165
	19.7	22.2	24.7	27.2	30.2	33.2	36.2	39.7	43.2	47.2	52	57	62	67	72	77	83	89	95	102	117	135	155
	18.2	20.6	23.1	25.6	28.6	31.6	34.6	38.1	41.6	45.6	51	56	61	66	71	76	82	88	94	101	116	133	153
1.08	27.8	30.3	32.8	35.3	38.3	41.3	44.3	47.8	51.3	55.3	60	65	70	75	80	85	91	97	103	110	125	143	163
	24.7	27.2	29.7	32.2	35.2	38.2	41.2	44.7	48.2	52.2	57	62	67	72	77	82	88	94	100	107	122	140	160
1.09	28.6	31.1	33.6	36.1	39.1	42.1	45.1	48.6	52.1	56.1	61	66	71	76	81	86	92	98	104	111	126	144	164
1.10	25.5	28.0	30.5	33.0	36.0	39.0	42.0	45.5	49.0	53.0	58	63	68	73	78	83	89	95	101	108	123	140	160
1.11	27.1	29.6	32.1	34.6	37.6	40.6	43.6	47.1	50.6	54.6	60	65	70	75	80	85	91	97	103	110	125	142	162
	23.8	26.3	28.8	31.3	34.3	37.3	40.3	43.8	47.3	51.3	56	61	66	71	76	81	87	93	99	106	121	139	159
1.12	35.2	37.7	40.2	42.7	45.7	48.7	51.7	55.2	58.7	62.7	68	73	78	83	88	93	99	105	111	118	133	150	170
	34.8	37.3	39.8	42.3	45.3	48.3	51.3	54.8	58.3	62.3	67	72	77	82	87	92	98	104	110	117	132	150	170
	31.4	33.9	36.4	38.9	41.9	44.9	47.9	51.4	54.9	58.9	64	69	74	79	84	89	95	101	107	114	129	146	166
	26.3	28.8	31.3	33.8	36.8	39.8	42.8	46.3	49.8	53.8	59	64	69	74	79	84	90	96	102	109	124	141	161
	22.9	25.4	27.9	30.4	33.4	36.4	39.4	42.9	46.4	50.4	55	60	65	70	75	80	86	92	98	105	120	138	158
	21.7	24.2	26.7	29.2	32.2	35.2	38.2	41.7	45.2	49.2	54	59	64	69	74	79	85	91	97	104	119	137	157

NOTES: ** Stock belt size 5V2650 & 5V3350 not shown
Arc & Length Factors are approximate values
Refer to Selection Procedure for more precise values

NOTE: Selection program VIA-VISA available at www.ptwizard.com.

SELECTION

DODGE®

5VX	D-V Wedge Single Belts to 200” POLYBAND to 200”

5V	D-V Wedge Single Belts over 200” POLYBAND over 200”

STOCK DRIVE SELECTION

Ratio	Stock Sheaves Diameter		1750 RPM Driver			1160 RPM Driver			870 RPM Driver			Belt Number and Approx. Center Distance**							
			Driven	HP/Belt		Driven	HP/Belt		Driven	HP/Belt		5VX	5VX	5VX	5VX	5VX	5VX	5VX	5VX
	Driver	Driven	RPM	5VX	5V	RPM	5VX	5V	RPM	5VX	5V	500	560	600	630	670	710	750	800
1.13	4.90	5.50	1556	11.2	7.0	1031	7.9	5.2	770	6.2	4.2	16.8	19.8	21.8	23.3	25.3	27.3	29.3	31.8
	6.30	7.10	1550	17.5	13.1	1027	12.4	9.6	770	9.6	7.6	14.5	17.5	19.5	21.0	23.0	25.2	27.2	29.5
	7.10	8.00	1551	21.1	16.4	1028	14.8	12.0	770	11.5	9.4	13.1	16.1	18.1	19.6	21.6	23.6	25.6	28.1
	8.00	9.00	1553	24.9	20.2	1030	17.6	14.6	770	13.6	11.5	11.6	14.6	16.6	18.1	20.1	22.1	24.1	26.6
1.14	5.20	5.90	1539	12.6	8.4	1020	8.9	6.2	763	6.9	4.9	16.3	19.3	21.3	22.8	24.8	26.8	28.8	31.3
	5.90	6.70	1538	15.8	11.4	1019	11.1	8.4	763	8.7	6.6	15.1	18.1	20.1	21.6	23.6	25.6	27.6	30.1
	7.50	8.50	1542	22.8	18.1	1022	16.1	13.2	763	12.5	10.4	12.4	15.4	17.4	18.9	20.9	22.9	24.9	27.4
	13.20	15.00	1539	44.9	37.6	1020	32.6	28.8	763	25.5	22.9	...	...	...	...	...	...	...	17.8
	14.00	16.00	1530	47.6	39.6	1014	34.7	30.8	763	27.2	24.6	...	...	...	...	...	...	...	...
ARC-LENGTH CORRECTION FACTOR —>												.85	.87	.86	.89	.90	.91	.91	.92
1.15	5.50	6.30	1524	14.0	9.7	1010	9.9	7.2	757	7.7	5.7	15.7	18.7	20.7	22.2	24.2	26.2	28.2	30.7
	8.50	9.75	1523	27.1	22.4	1010	19.1	16.1	757	14.9	12.7	...	13.7	15.7	17.2	19.2	21.2	23.2	25.7
	9.00	10.30	1527	29.1	24.0	1012	20.6	17.6	757	16.0	13.8	...	12.8	14.8	16.3	18.3	20.3	22.3	24.8
	10.30	11.80	1526	34.3	28.6	1011	24.4	21.2	757	19.0	16.7	...	...	1.26	14.1	16.1	18.1	20.1	22.6
	10.90	12.50	1524	38.6	30.7	1010	26.2	22.8	757	20.4	18.1	...	...	...	1.31	15.1	17.1	19.1	21.6
1.16	8.00	9.25	1511	25.0	20.2	1002	17.6	14.7	750	13.7	11.6	11.4	14.4	16.4	17.9	19.9	21.9	23.9	26.4
	9.75	11.30	1508	32.2	26.7	999	22.8	19.7	750	17.8	15.5	...	...	13.5	14.9	16.9	19.0	21.0	23.5
1.17	11.30	13.20	1496	38.2	32.0	992	27.3	24.0	744	21.3	19.0	...	...	...	...	...	16.2	18.2	20.7
	16.00	18.70	1496	...	...	992	40.0	35.5	744	31.5	28.6	...	...	...	...	...	...	...	...
1.18	9.25	10.90	1483	30.2	25.0	983	21.4	18.4	737	16.6	14.4	...	12.2	14.2	15.7	17.7	19.7	21.7	24.2
ARC-LENGTH CORRECTION FACTOR —>												.85	.87	.86	.89	.90	.91	.91	.92
1.19	4.40	5.20	1475	9.1	5.0	978	6.4	3.8	731	5.1	3.1	17.5	20.5	22.5	24.0	26.0	28.0	30.0	32.5
	4.65	5.50	1475	10.2	6.1	977	7.3	4.6	731	5.7	3.7	17.0	20.0	22.0	23.5	25.5	27.5	29.5	32.0
	6.30	7.50	1466	17.7	13.4	972	12.5	9.7	731	9.7	7.7	14.1	17.2	19.2	20.7	22.7	24.7	26.7	29.2
	11.80	14.00	1473	40.1	33.7	976	28.8	25.3	731	22.4	20.1	...	...	...	...	...	15.2	17.2	19.7
1.20	6.70	8.00	1462	19.5	15.1	969	13.7	11.0	725	10.7	8.6	13.4	16.4	18.4	19.9	22.0	24.0	26.0	28.5
	7.10	8.50	1458	21.3	16.7	967	15.0	12.2	725	11.6	9.6	12.7	15.7	17.7	19.2	21.2	23.2	25.2	27.7
	7.50	9.00	1455	23.0	18.4	964	16.2	13.4	725	12.6	10.5	12.0	15.0	17.0	18.5	20.5	22.5	24.5	27.0
	12.50	15.00	1456	42.6	35.8	965	30.8	27.2	725	24.0	21.6	...	...	...	...	...	...	15.9	18.4
1.21	4.90	5.90	1448	11.4	7.3	960	8.1	5.4	719	6.3	4.4	16.5	19.5	21.5	23.0	25.0	27.0	29.0	31.5
	5.90	7.10	1450	16.0	11.7	961	11.3	8.5	719	8.8	6.8	14.8	17.8	19.8	21.3	23.3	25.3	27.3	29.8
	8.50	10.30	1441	27.2	22.3	955	19.2	16.3	719	14.9	12.8	...	13.2	15.2	16.7	18.7	20.7	22.7	25.2
	9.00	10.90	442	29.3	24.2	956	20.7	17.7	719	16.1	14.0	...	12.3	14.3	15.8	17.8	19.8	21.9	24.4
	9.75	11.80	1443	32.3	26.9	957	22.9	19.8	719	17.8	15.6	...	...	13.0	14.5	16.5	18.5	20.5	23.1
	10.90	13.20	1443	38.8	30.9	956	26.3	23.0	719	20.5	18.2	...	...	...	...	14.5	16.5	18.5	21.0
	13.20	16.00	1442	45.1	37.8	956	32.7	29.0	719	25.6	23.1	...	...	...	...	...	...	...	17.0
1.22	5.20	6.30	1440	12.8	8.7	954	9.1	6.4	713	7.1	5.1	16.0	19.0	21.0	22.5	24.5	26.5	28.5	31.0
	5.50	6.70	1432	14.2	10.0	949	10.0	7.3	713	7.8	5.8	15.4	18.4	20.4	21.9	23.9	56.9	27.9	30.4
	8.00	9.75	1433	25.2	20.4	950	17.7	14.9	713	13.8	11.7	...	14.0	16.0	17.5	19.5	21.5	23.5	26.0
	9.25	11.30	1430	30.3	25.2	948	21.5	18.5	713	16.7	14.5	...	...	13.8	15.3	17.3	19.3	21.3	23.8
	10.30	12.50	1440	34.5	28.9	954	24.6	21.4	713	19.1	16.9	...	...	...	13.6	15.6	17.6	19.6	22.1
1.24	7.50	9.25	1415	23.1	18.5	938	16.3	13.4	702	12.6	10.5	11.8	14.8	16.8	18.3	20.3	22.3	24.3	26.8
	11.30	14.00	1410	38.4	32.3	935	27.5	24.1	702	21.4	19.0	...	...	...	...	...	15.6	17.6	20.1
1.25	15.00	18.70	1402	...	...	929	37.6	33.4	696	29.5	26.8	...	...	...	...	...	...	...	...
1.26	4.40	5.50	1394	9.2	5.2	924	6.6	3.9	690	5.1	3.2	17.2	20.2	22.2	23.7	25.7	27.7	29.7	32.2
	9.00	11.30	1391	29.4	24.3	922	20.8	17.8	690	16.1	14.0	...	12.0	14.0	15.5	17.5	19.5	21.5	24.0
1.27	4.65	5.90	1373	10.4	6.4	910	7.4	4.9	685	5.8	3.8	16.7	19.7	21.7	23.2	25.2	27.2	29.2	31.7
	6.30	8.00	1373	17.9	13.6	910	12.6	9.9	685	9.8	7.8	13.7	16.7	18.7	20.3	22.3	24.3	26.3	28.8
	6.70	8.50	1375	19.7	15.3	911	13.8	11.1	685	10.7	8.7	13.0	16.0	18.0	19.5	21.5	23.6	25.6	28.1
	7.10	9.00	1376	21.4	16.9	912	15.1	12.3	685	11.7	9.7	12.3	15.3	17.3	18.8	20.8	22.8	24.8	27.3
	11.80	15.00	1374	40.3	33.9	911	28.9	25.5	685	22.5	20.2	...	...	...	...	...	...	16.4	18.9
1.28	5.90	7.50	1372	16.1	11.9	909	11.4	8.7	680	8.8	6.9	14.5	17.5	19.5	21.0	23.0	25.0	27.0	29.5
	9.25	11.80	1369	30.5	25.3	907	21.6	18.6	680	16.8	14.6	...	...	13.4	14.9	16.9	18.9	20.9	23.4
	9.75	12.50	1362	32.5	27.1	903	23.0	20.0	680	17.9	15.7	...	...	...	14.0	16.0	18.0	20.0	22.5
	10.30	13.20	1363	34.6	29.1	903	24.6	21.5	680	19.2	16.9	...	...	...	...	15.0	17.0	19.0	21.5
	12.50	16.00	1365	42.8	36.0	905	30.9	27.3	680	24.1	21.7	...	...	...	...	...	...	...	17.5
1.29	4.90	6.30	1355	11.6	7.5	898	8.2	5.6	674	6.4	4.5	162	192	21.2	22.7	24.7	26.7	28.7	31.2
	5.20	6.70	1352	13.0	8.9	896	9.2	6.5	674	7.1	5.2	15.6	1836	20.6	22.1	24.1	26.4	28.1	30.6
	8.00	10.30	1355	25.3	20.6	898	17.8	15.0	674	13.9	11.8	...	13.6	15.6	17.1	19.1	21.1	23.1	25.6
	8.50	10.90	1361	27.4	22.5	902	19.3	16.4	674	15.0	12.9	...	12.7	14.7	16.2	18.2	20.2	22.2	24.7
	10.90	14.00	1360	37.0	31.1	901	26.4	23.1	674	20.5	18.3	...	...	...	...	13.9	15.9	17.9	20.4

NOTE: * 5VX = Single and Polyband belts to 200” length
5V = Single and Polyband belts over 200” long

** Stock belt size 5VX530 not shown

NOTE: Selection program VIA-VISA available at www.ptwizard.com.

DODGE®

5VX	D-V Wedge Single Belts to 200” POLYBAND to 200”

5V	D-V Wedge Single Belts over 200” POLYBAND over 200”

STOCK DRIVE SELECTION

Ratio	Belt Number and Approx. Center Distance**																					
	5VX 850	5VX 900	5VX 950	5VX 1000	5VX 1060	5VX 1120	5VX 1180	5VX 1250	5VX 1320	5VX 1400	5VX 1500	5VX 1600	5VX 1700	5VX 1800	5VX 1900	5VX 2000	5V 2120	5V 2240	5V 2500	5V 2800	5V 3150	5V 3550
1.13	34.3	36.8	39.3	41.8	44.8	47.8	50.8	54.3	57.8	61.8	67	72	77	82	87	92	98	104	117	132	149	169
	32.0	34.5	37.0	39.5	42.5	45.5	48.5	52.0	55.5	59.5	64	69	74	79	84	89	95	101	114	129	147	167
	30.6	33.1	35.6	38.1	41.1	44.1	47.1	50.6	54.1	58.1	63	68	73	78	83	88	94	100	113	128	146	166
	29.1	31.6	34.1	36.6	39.6	42.6	45.6	49.1	52.6	56.6	62	67	72	77	82	87	93	99	112	127	144	164
1.14	33.8	36.3	38.8	41.3	44.3	47.3	50.3	53.8	57.3	61.3	66	71	76	81	86	91	97	103	116	131	147	169
	32.6	35.1	37.6	41.1	43.1	46.1	49.1	52.6	56.1	60.1	65	70	75	80	85	90	96	102	115	130	148	168
	29.9	32.4	34.9	37.4	40.4	43.4	46.4	49.9	53.4	57.4	62	67	72	77	82	87	93	99	112	127	145	165
	20.3	22.8	25.3	27.8	30.8	33.8	36.8	40.3	43.8	47.8	53	58	63	68	73	78	84	90	103	118	135	155
	18.9	21.4	23.9	26.4	29.4	32.4	35.4	38.9	42.4	46.4	51	56.	61	66	71	76	82	88	101	116	134	154
	.93	**.94**	**.95**	**.96**	**.97**	**.98**	**.99**	**1.00**	**1.01**	**1.02**	**1.03**	**1.04**	**1.05**	**1.06**	**1.07**	**1.08**	**1.08**	**1.09**	**1.11**	**1.13**	**1.15**	**1.17**
1.15	33.2	35.7	38.2	40.7	43.7	46.7	49.7	53.2	56.7	60.7	66	71	76	81	86	91	97	103	116	131	146	168
	28.2	30.7	33.2	35.7	38.7	41.7	44.7	48.2	51.7	55.7	61	66	71	76	81	86	92	98	111	126	148	163
	27.3	29.8	32.3	34.8	37.8	40.8	43.8	47.3	50.8	54.8	60	65	70	75	80	85	91	97	110	125	142	162
	25.1	27.6	30.1	32.6	35.6	38.6	41.6	45.1	48.6	52.6	58	63	68	73	78	83	89	95	108	123	140	160
	24.1	26.6	29.1	31.6	34.6	37.6	40.6	44.1	47.6	51.6	57	62	67	72	77	82	88	94	107	122	139	159
1.16	28.9	31.4	33.9	36.4	39.4	42.4	45.4	46.9	52.4	56.4	61	66	71	76	81	86	92	98	111	126	144	164
	26.0	28.5	31.0	33.5	36.5	39.5	42.5	46.0	49.5	53.5	58	63	68	73	78	83	89	95	108	123	141	161
1.17	23.2	25.7	28.3	30.8	33.8	36.8	39.8	43.3	46.8	50.8	56	61	66	71	76	81	89	93	106	121	138	158
	...	...	20.2	22.7	25.7	28.7	31.7	35.2	38.7	42.7	47	53	58	63	68	73	79	85	98	113	130	150
1.18	26.7	29.2	31.7	34.2	37.2	40.2	43.2	46.7	50.2	54.2	59	64	69	74	79	84	90	96	109	124	142	162
	.93	**.94**	**.95**	**.96**	**.97**	**.98**	**.99**	**1.00**	**1.01**	**1.02**	**1.03**	**1.04**	**1.05**	**1.06**	**1.07**	**1.08**	**1.08**	**1.09**	**1.11**	**1.13**	**1.15**	**1.17**
1.19	35.0	37.5	40.0	42.5	45.5	48.5	51.5	55.0	58.5	62.5	67	72	77	82	87	92	98	104	117	132	150	170
	34.5	37.0	39.5	42.0	45.0	48.0	51.0	54.5	59.0	62.0	67	72	77	82	87	92	98	104	117	132	150	170
	31.7	34.2	36.7	39.2	42.2	45.2	48.2	51.7	55.2	59.2	64	69	74	79	84	89	95	101	114	129	147	167
	22.2	24.7	27.2	29.7	32.7	35.7	38.7	42.2	45.7	49.7	54	60	65	70	75	70	86	92	105	132	137	157
1.20	31.0	33.5	36.0	38.5	41.5	44.5	47.5	51.0	54.5	58.5	63	68	73	78	83	88	94	100	113	128	146	166
	30.2	32.7	35.2	37.7	40.7	43.7	46.7	50.2	53.7	57.7	63	68	73	77	83	88	94	100	113	129	145	165
	29.5	32.0	34.5	37.0	40.0	43.0	46.0	49.5	53.0	57.0	62	67	72	77	82	87	93	99	112	127	145	165
	20.9	23.4	25.9	28.4	31.4	34.4	37.4	40.9	44.4	48.4	53	58	63	68	73	78	84	90	103	118	136	156
1.21	34.0	36.5	39.0	41.5	44.5	47.5	50.5	54.0	57.5	61.5	66	71	76	81	86	91	97	103	117	132	149	169
	32.3	34.8	37.3	39.8	42.8	45.8	48.8	52.3	55.8	59.8	65	70	75	80	85	90	96	102	115	130	147	167
	27.7	30.2	32.7	35.2	38.2	41.2	44.2	47.7	51.2	55.2	60	65	70	75	80	85	91	97	110	125	143	163
	26.9	29.4	31.9	34.4	37.4	40.4	43.4	46.9	50.4	54.4	59	64	69	74	79	84	90	96	109	124	142	162
	25.6	28.1	30.6	33.1	36.1	39.1	42.1	45.6	49.1	53.1	58	63	68	73	78	83	89	95	108	123	141	161
	23.5	26.0	28.5	31.1	34.1	37.1	40.1	43.6	47.1	51.1	56	61	66	71	76	81	87	93	106	121	139	159
	19.5	22.0	24.5	27.0	30.0	33.0	36.0	39.5	43.0	47.0	52	57	62	67	72	77	83	89	102	117	135	155
1.22	33.5	36.0	38.5	41.0	44.0	47.0	50.0	53.5	57.0	61.0	66	71	76	81	86	91	97	103	116	131	149	169
	32.9	35.4	37.9	40.4	43.4	46.4	49.4	52.9	54.4	60.4	65	70	75	80	85	90	96	102	115	130	148	168
	28.5	31.0	33.5	36.0	39.0	42.1	45.1	48.6	52.1	56.1	61	66	71	76	81	86	92	98	111	125	144	164
	26.3	28.8	31.3	33.8	36.8	39.8	42.8	46.3	49.8	53.9	59	634	69	74	79	84	90	96	109	124	141	161
	24.6	27.1	29.6	32.1	35.1	38.1	41.1	44.6	48.1	52.1	57	62	67	72	77	82	88	94	107	122	140	160
1.24	29.3	31.8	34.3	36.8	39.8	42.8	45.8	49.3	52.8	56.8	62	67	72	77	82	87	93	99	112	127	144	164
	22.6	25.1	27.6	30.1	33.1	36.1	39.1	42.6	46.1	50.1	55	60	65	70	75	80	86	92	105	120	138	158
1.25	...	...	21.0	23.5	26.5	29.5	32.5	36.0	39.5	43.5	49	54	59	64	69	74	80	86	99	114	131	151
1.26	34.7	37.2	39.7	42.2	45.2	46.2	51.2	54.7	58.2	62.2	67	72	77	82	87	92	98	104	117	132	150	170
	26.5	29.0	31.5	34.0	37.0	40.0	43.0	46.5	50.0	54.0	59	64	69	74	79	84	90	96	109	124	142	162
1.27	34.2	36.7	39.2	41.7	44.7	47.7	50.7	54.2	57.7	61.7	67	72	77	82	87	92	98	104	117	132	149	169
	31.3	33.8	36.3	38.8	41.8	44.8	47.8	51.3	54.8	58.8	64	69	74	79	83	89	95	101	114	129	146	166
	30.6	32.3	34.8	37.3	40.3	43.3	46.3	4938	53.3	57.3	62	67	72	77	82	87	93	99	112	127	145	165
	29.8	32.3	34.8	37.3	40.3	43.3	46.3	49.8	53.3	57.3	62	67	72	77	82	87	93	99	112	127	145	165
	21.4	23.9	26.4	28.9	31.9	34.9	37.9	41.4	44.9	48.9	54	59	64	70	74	79	85	91	104	119	136	156
1.28	32.0	34.5	37.0	39.5	42.5	45.5	48.5	52.0	55.5	59.5	64	69	74	79	84	89	95	101	114	129	147	167
	25.9	28.4	30.9	33.4	36.4	39.4	42.4	45.9	49.5	53.5	58	63	68	73	78	83	89	95	108	123	141	161
	25.0	27.5	30.0	32.5	35.5	38.5	41.5	45.0	48.5	52.5	57	62	67	72	77	82	88	94	108	123	140	160
	24.0	26.5	29.0	31.5	34.5	37.5	40.5	44.0	47.5	51.5	56	61	66	71	75	81	87	93	107	122	139	159
	20.0	22.5	25.1	27.6	30.6	33.6	36.6	40.1	43.6	47.6	52	58	63	68	36	78	84	90	103	118	135	155
1.29	33.7	36.2	38.7	41.2	44.2	47.2	50.2	53.7	57.2	61.2	66	71	76	81	82	91	97	103	116	131	149	169
	32.2	35.7	38.2	40.7	43.7	46.7	49.7	53.2	56.7	60.7	66	71	76	81	86	91	97	103	116	131	148	168
	28.1	30.6	33.1	35.6	38.6	41.6	44.6	48.1	51.6	55.6	61	66	71	76	81	86	92	98	111	126	143	163
	27.2	29.7	32.2	34.7	37.7	40.7	43.7	47.2	50.7	54.8	60	65	70	75	80	85	91	97	110	125	142	162
	22.9	25.4	27.9	30.4	33.4	36.4	39.4	42.9	46.4	50.4	55	60	65	70	75	80	86	92	105	120	138	158

NOTES: ** Stock belt size 5V2650 & 5V3350 not shown
Arc & Length Factors are approximate values
Refer to Selection Procedure for more precise values

NOTE: Selection program VIA-VISA available at www.ptwizard.com.

SELECTION

DODGE®

5VX	D-V Wedge Single Belts to 200” POLYBAND to 200”

5V	D-V Wedge Single Belts over 200” POLYBAND over 200”

STOCK DRIVE SELECTION

Ratio	Stock Sheaves Diameter		1750 RPM Driver			1160 RPM Driver			870 RPM Driver			Belt Number and Approx. Center Distance**							
			Driven	HP/Belt		Driven	HP/Belt		Driven	HP/Belt		5VX	5VX	5VX	5VX	5VX	5VX	5VX	5VX
	Driver	Driven	RPM	5VX	5V	RPM	5VX	5V	RPM	5VX	5V	500	560	600	630	670	710	750	800
1.30	5.50	7.10	1350	14.4	10.2	895	10.1	7.5	669	7.9	5.9	15.1	18.1	20.1	21.6	23.6	25.6	27.6	30.1
	7.50	9.75	1342	23.2	18.6	890	16.3	13.5	669	12.7	10.6	11.4	14.4	16.4	17.9	19.9	21.9	23.9	26.4
ARC-LENGTH CORRECTION FACTOR —>												.84	.86	.87	.88	.89	.90	.91	.92
1.31	7.10	9.25	1339	21.5	17.0	887	15.1	12.3	664	11.7	9.7	12.1	15.1	17.1	18.6	20.6	22.6	24.6	27.1
	9.00	11.80	1331	29.5	24.5	882	20.9	17.9	664	16.2	14.1	...	...	13.6	15.1	17.1	19.1	21.1	23.6
1.33	8.50	11.30	1313	27.5	22.6	870	19.4	16.5	654	15.1	13.0	...	12.4	14.4	15.9	17.9	19.9	21.9	24.4
	11.30	15.00	1315	38.5	32.5	872	27.6	24.2	654	21.5	19.2	...	...	...	...	...	14.7	16.8	19.3
	16.00	21.20	1319	...	...	874	...	...	654	31.7	28.9	...	...	...	...	...	...	...	...
1.34	14.00	18.70	1308	48.0	40.2	867	35.0	31.1	649	27.4	24.9	...	...	...	...	...	...	...	...
1.35	4.40	5.90	1297	9.4	5.4	860	6.7	4.1	644	5.2	3.3	16.9	19.9	21.9	23.4	25.4	27.4	29.4	31.9
	6.30	8.50	1292	18.0	13.7	856	12.7	10.2	644	9.9	7.9	13.3	16.3	18.3	19.9	21.8	23.9	25.9	28.4
	6.70	9.00	1298	19.8	15.4	860	13.9	11.2	644	10.8	8.8	12.6	15.6	17.6	19.1	21.1	23.1	25.1	27.7
1.36	4.65	6.30	1284	10.6	6.5	851	7.5	4.9	640	5.8	3.9	16.4	19.4	21.4	22.9	24.9	26.9	28.9	31.4
	5.90	8.00	1285	16.3	12.1	852	11.4	8.8	640	8.9	6.9	14.2	17.1	19.1	20.6	22.6	24.6	26.6	29.1
	9.25	12.50	1291	30.5	25.5	856	21.6	18.7	640	16.8	14.7	...	...	12.8	14.3	16.3	18.3	20.4	22.9
	9.75	13.20	1289	32.6	27.3	855	23.1	20.1	640	18.0	15.8	...	...	...	13.4	15.4	17.4	19.4	21.9
	10.30	14.00	1284	34.8	29.2	851	24.7	21.5	640	19.2	17.0	...	...	...	...	14.3	16.3	18.3	20.8
	11.80	16.00	1288	4.04	34.1	854	29.0	25.6	640	22.6	20.3	...	...	...	...	...	...	15.5	18.0
ARC-LENGTH CORRECTION FACTOR —>												.82	.84	.85	.86	.87	.88	.90	.91
1.37	5.20	7.10	1275	13.1	9.0	845	9.2	6.6	635	7.2	5.3	15.3	18.3	20.3	21.8	23.8	25.8	27.8	30.3
	5.50	7.50	1277	14.5	10.3	846	10.2	7.5	635	7.9	56.0	14.8	17.8	19.8	21.3	23.3	25.3	27.3	29.8
	8.00	10.90	1280	25.4	20.7	849	17.9	15.1	635	13.9	11.8	...	13.1	15.1	16.6	18.6	20.6	22.6	25.1
1.38	4.90	6.70	1273	11.7	7.7	844	8.3	5.7	630	6.5	4.5	15.9	18.9	20.9	22.4	24.4	26.4	28.4	30.9
	7.10	9.75	1269	21.6	17.1	841	15.2	12.4	630	11.8	9.8	11.7	14.7	16.7	18.2	20.2	22.2	24.2	26.7
	7.50	10.30	1270	23.3	18.7	842	16.4	13.6	630	12.7	10.7	...	13.9	16.0	17.5	19.5	21.5	23.5	26.0
	10.90	15.00	1268	37.1	31.3	841	26.5	23.2	630	20.6	18.3	...	...	...	...	...	...	17.0	19.6
1.39	6.70	9.25	1262	19.8	15.5	837	14.0	11.2	626	10.8	8.8	12.4	15.4	17.4	18.9	20.9	22.9	24.9	27.4
	8.50	11.80	1256	27.5	22.7	833	19.4	16.5	626	15.1	13.0	...	...	14.0	15.5	17.5	19.5	21.5	24.0
	9.00	12.50	1256	29.6	24.6	833	20.9	18.0	626	16.2	14.1	...	...	13.0	14.5	16.5	18.5	20.5	23.0
1.42	8.00	11.30	1234	25.5	20.8	818	18.0	15.1	613	13.9	11.9	...	12.7	14.7	16.3	18.3	20.3	22.3	24.8
	11.30	16.00	1233	38.6	32.6	817	27.6	24.3	613	21.5	19.2	...	...	...	...	...	...	15.9	18.4
	13.20	18.70	1233	45.4	38.3	817	32.9	29.2	613	25.7	23.2	...	...	...	...	...		...	...
	15.00	21.20	1236	...	...	819	...	...	613	29.6	26.9	...	...	...	...	...	...	...	...
1.43	9.25	13.20	1222	30.7	25.6	810	21.7	18.7	608	16.8	14.7	...	...	...	13.7	15.7	17.8	19.8	22.3
1.44	4.40	6.30	1214	9.5	5.5	805	6.7	4.2	604	5.3	3.4	16.6	19.6	21.6	23.1	25.1	27.1	29.1	31.6
	6.30	9.00	1219	18.1	13.9	808	12.7	10.1	604	9.9	7.9	12.9	15.9	17.9	19.4	21.4	23.4	25.4	28.0
	9.75	14.00	1215	32.7	27.4	805	23.2	20.1	604	18.0	15.9	...	...	...	...	14.7	16.7	18.7	21.2
1.45	4.65	6.70	1206	10.6	6.7	800	7.5	5.0	600	5.9	4.0	16.1	19.1	21.1	22.6	24.6	26.6	28.6	31.1
	5.20	7.50	1206	13.2	9.1	799	9.3	6.7	600	7.2	5.3	15.0	18.0	20.0	21.5	2..5	25.5	27.5	30.0
	5.90	8.50	1208	16.4	12.2	801	11.5	8.9	600	8.9	7.0	13.6	16.6	18.6	20.1	22.2	24.2	26.2	28.7
1.46	4.90	7.10	1200	11.8	7.8	795	8.3	5.8	596	6.5	4.6	15.5	18.5	20.5	22.0	24.1	26.1	28.1	30.6
	5.50	8.00	1196	14.6	10.5	793	10.2	7.6	596	8.0	6.0	14.3	17.4	19.4	20.9	22.9	24.9	26.9	29.4
	6.70	9.75	1197	19.9	15.6	793	14.0	11.3	596	10.9	8.9	12.0	15.0	17.0	18.5	20.5	22.5	24.5	27.0
	7.10	10.30	1201	21.7	17.2	796	15.2	12.5	596	11.8	9.8	11.2	14.2	16.3	17.8	19.8	21.8	23.8	26.3
	7.50	10.90	1199	23.4	18.8	795	16.5	13.7	596	12.8	10.8	...	13.4	15.5	17.0	19.0	21.0	23.0	25.5
	10.30	15.00	1198	34.9	29.3	794	24.8	21.7	596	19.3	17.1	...	...	...	...	...	15.5	17.5	20.0
1.47	9.00	13.20	1189	29.7	24.7	788	21.0	18.0	592	16.3	14.2	...	...	...	13.9	15.9	17.9	20.0	22.5
	10.90	16.00	1189	37.2	31.4	788	26.5	23.3	592	20.6	18.4	...	...	...	...	...	...	16.2	18.7
ARC-LENGTH CORRECTION FACTOR —>												.82	.84	.85	.86	.87	.88	.90	.91
1.48	6.30	9.25	1186	18.2	13.9	590	12.8	10.1	588	9.9	8.	12.7	15.7	17.7	192	21.2	23.2	25.2	27.8
	8.00	11.80	1182	25.5	20.9	587	18.0	15.2	588	14.0	11.9	...	12.3	14.3	15.8	17.8	19.9	21.9	24.4
	8.50	12.50	1185	27.6	22.8	589	19.5	16.6	588	15.1	13.1	...	...	13.4	14.9	16.9	18.9	20.9	23.4
	16.00	23.60	1184	...	...	589	40.3	35.9	588	31.8	29.0	...	...	...	...	...	...		...
1.50	12.50	18.70	1167	43.1	36.4	580	31.0	27.5	580	24.2	21.8	...	...	...	...	...	...		...
1.51	7.50	11.30	1156	23.4	18.9	575	16.5	13.7	576	12.8	10.8	...	13.1	15.1	16.6	18.6	20.6	22.7	25.2
1.52	9.25	14.00	1152	30.7	25.7	573	21.7	18.8	572	16.9	14.8	...	...	...	...	15.1	17.1	19.1	21.6
	14.00	21.20	1153	46.2	40.0	573	35.1	31.3	572	27.5	25.0	...	...	...	...	...	...	...	...
1.53	4.40	6.70	1140	9.5	5.6	567	6.8	4.2	569	5.3	3.4	16.2	19.2	21.3	22.8	24.8	26.8	28.8	31.3
	5.90	9.00	1140	16.4	12.3	567	11.5	8.9	569	9.0	7.0	13.2	16.2	18.2	19.7	21.7	23.7	25.8	28.3

NOTE: * 5VX = Single and Polyband belts to 200” length
5V = Single and Polyband belts over 200” long

** Stock belt size 5VX530 not shown

NOTE: Selection program VIA-VISA available at www.ptwizard.com.

DODGE®

5VX	D-V Wedge Single Belts to 200” POLYBAND to 200”

5V	D-V Wedge Single Belts over 200” POLYBAND over 200”

STOCK DRIVE SELECTION

Ratio	Belt Number and Approx. Center Distance**																						
	5VX 850	5VX 900	5VX 950	5VX 1000	5VX 1060	5VX 1120	5VX 1180	5VX 1250	5VX 1320	5VX 1400	5VX 1500	5VX 1600	5VX 1700	5VX 1800	5VX 1900	5VX 2000	5V 2120	5V 2240	5V 2360	5V 2500	5V 2800	5V 3150	5V 3550
1.30	32.6	35.1	37.6	40.1	43.1	46.1	49.1	52.6	56.1	60.1	65	70	75	80	85	90	96	102	108	115	130	148	168
	28.9	31.4	33.9	36.4	39.4	42.4	45.4	48.9	52.4	56.4	61	66	71	76	81	86	92	98	104	111	126	144	164
	.93	.94	.95	.96	.97	.99	.99	1.00	1.01	1.02	1.03	1.04	1.05	1.06	1.07	1.07	1.08	1.09	1.10	1.11	1.13	1.15	1.17
1.31	29.6	32.1	34.6	37.1	40.1	43.1	46.1	49.6	53.1	57.1	62	67	72	77	82	87	93	99	105	112	127	145	165
	26.1	28.6	31.1	33.6	36.6	39.6	42.6	46.1	49.6	53.6	59	64	69	74	79	84	90	96	102	109	124	141	161
1.33	26.9	29.4	31.9	34.4	37.4	40.4	43.4	46.9	50.4	54.4	59	64	69	74	79	84	90	96	102	109	124	142	162
	21.8	24.3	26.8	29.3	32.3	35.3	38.3	41.8	45.3	49.3	54	59	64	69	74	79	85	91	97	104	119	137	157
	...	...	...	...	23.6	26.7	29.7	33.2	36.7	40.7	46	51	56	61	66	71	77	83	89	96	111	128	146
1.34	...	19.2	21.7	24.2	27.2	30.2	33.2	36.7	40.2	44.3	49	54	59	64	69	74	80	86	92	99	114	132	152
1.35	34.4	36.9	39.4	41.9	44.9	47.9	50.9	54.4	57.9	61.9	67	73	77	82	87	92	98	104	110	117	132	149	169
	30.9	33.4	35.9	38.4	41.4	44.4	47.4	50.9	54.4	58.4	63	68	73	78	83	88	94	100	106	113	128	146	166
	30.1	32.6	35.2	37.7	40.7	43.7	46.7	50.2	53.7	57.7	63	68	73	78	83	88	94	100	106	113	128	145	165
1.36	33.9	36.4	38.9	41.1	44.4	47.4	50.4	53.9	547.4	61.4	66	71	76	81	86	91	97	103	109	116	131	149	169
	31.6	34.1	36.6	39.1	42.1	45.1	48.1	51.6	55.1	59.1	64	69	74	79	84	89	95	101	107	114	129	147	167
	25.4	27.9	30.4	32.9	35.9	38.9	41.9	45.4	48.9	52.9	58	63	68	73	78	83	89	95	101	108	123	140	160
	24.4	26.9	29.4	31.9	34.9	37.9	40.9	44.4	47.9	51.9	57	62	67	72	77	82	88	94.	100	107	122	139	159
	23.3	25.8	28.4	30.9	33.9	36.9	39.9	43.4	46.9	50.9	56	61	66	71	76	81	87	93	99	106	121	138	158
	20.6	23.1	25.6	28.1	31.1	34.1	37.1	40.6	44.1	48.4	53	58	63	68	73	78	84	90	96	103	118	136	156
	.92	.93	.94	.95	.96	.97	.98	.99	1.00	1.01	1.02	1.03	1.04	1.05	1.06	1.07	1.08	1.09	1.10	1.11	1.13	1.15	1.17
1.37	32.8	35.9	38.4	40.9	43.9	46.9	49.9	53.4	56.9	60.9	66	71	76	81	86	91	97	103	108	116	131	148	168
	32.3	34.8	37.3	39.8	42.8	45.8	48.8	52.3	55.8	59.8	65	70	75	80	84	90	96	102	108	115	130	147	167
	27.6	30.1	32.6	35.1	38.1	41.1	44.1	47.5	51.1	55.1	60	65	70	75	80	85	91	97	103	110	125	143	162
1.38	33.4	35.9	38.4	40.9	43.9+	46.9	49.9	53.4	56.9	60.9	66	71	76	81	86	91	97	103	109	116	131	148	168
	29.2	31.7	34.2	36.7	39.7	42.7	45.7	49.2	52.7	56.8	62	67	72	77	82	87	93	99	105	112	127	144	164
	28.5	31.0	33.5	36.0	39.0	42.0	45.0	48.5	52.0	56.0	61	66	71	76	81	86	92	98	104	111	126	143	163
	22.1	24.6	27.1	29.6	32.6	35.6	38.6	42.1	45.6	49.6	55	60	65	70	75	80	85	91	98	105	120	137	157
1.39	29.9	32.4	34.9	37.5	40.5	43.5	46.5	50.0	53.5	57.5	62	67	72	77	82	87	93	99	105	112	127	145	165
	26.5	29.0	31.5	34.0	37.0	40.0	43.0	46.5	50.0	54.0	59	64	69	74	79	84	90	96	102	109	124	141	161
	25.6	28.1	30.6	33.1	36.1	39.1	42.1	45.6	49.1	53.1	58	63	68	73	78	83	89	95	101	108	123	141	161
1.42	27.3	29.8	32.3	34.8	37.8	40.8	43.8	47.3	50.8	54.8	60	65	70	75	80	85	91	97	103	110	125	142	162
	20.9	23.4	26.0	28.5	31.5	34.5	37.5	41.0	44.5	46.5	53	58	63	68	73	78	84	90	97	103	118	136	156
	...	19.8	22.3	24.8	27.8	30.8	33.8	37.3	40.9	44.9	50	55	60	65	70	75	81	87	92	100	115	132	154
	...	...	...	21.3	24.4	27.4	30.4	33.9	37.4	41.5	46	51	56	61	66	71	77	83	90	96	111	129	149
1.43	24.8	27.3	29.8	32.3	35.3	38.3	41.3	44.8	48.3	52.3	57	62	67	72	77	82	88	94	100	107	122	140	160
1.44	34.1	36.6	39.1	41.6	44.6	47.6	50.6	54.1	57.6	61.6	67	72	77	82	87	92	98	104	110	117	132	149	169
	30.5	33.0	35.5	38.0	41.0	44.0	47.0	50.5	54.0	58.0	63	68	73	78	83	88	94	100	106	113	128	145	165
	24.8	26.3	28.8	31.3	34.3	37.3	40.3	43.8	47.3	51.3	56	61	66	71	76	81	87	93	99	106	121	139	159
1.45	33.6	36.1	38.6	41.1	44.1	47.1	50.1	53.6	57.1	61.1	66	71	76	81	86	91	97	103	109	116	131	147	169
	32.5	35.0	37.5	40.0	43.0	46.0	49.0	52.5	56.0	60.0	65	70	75	80	85	90	96	102	108	115	130	148	168
	31.2	33.7	36.2	38.7	41.7	44.7	47.7	51.2	54.7	58.7	64	69	74	79	84	89	95	101	107	114	129	146	166
1.46	33.1	35.6	38.1	40.6	43.6	46.6	49.6	53.1	56.6	60.6	66	70	76	81	86	91	97	103	109	116	131	146	168
	31.9	34.4	36.9	39.4	42.4	45.4	48.4	51.9	55.4	59.4	64	69	74	79	84	89	95	101	107	114	129	147	167
	29.5	32.1	34.6	37.1	40.1	43.1	46.1	49.6	53.1	57.1	62	67	72	77	82	87	93	99	105	112	127	145	165
	28.8	31.3	33.8	36.3	39.3	42.3	45.3	48.8	52.3	56.3	61	66	71	76	81	86	92	98	104	111	126	144	164
	28.0	30.5	33.0	35.5	38.5	41.5	44.5	48.0	51.5	55.5	60	65	70	75	80	85	91	97	104	110	125	143	163
	22.5	25.0	27.5	30.0	33.0	36.1	39.1	42.6	46.1	50.1	55	60	65	70	75	80	86	92	9*8	105	120	138	158
1.47	25.0	27.5	30.0	32.5	35.5	38.5	41.5	45.0	48.5	52.5	57	62	67	72	77	82	88	94	101	107	122	140	160
	2.12	23.7	26.2	28.8	31.8	34.8	37.8	41.3	44.8	48.8	54	59	64	69	74	79	85	91	97	104	119	136	156
	.92	.93	.94	.95	.96	.97	.98	.99	1.00	1.01	1.02	1.03	1.04	1.05	1.06	1.07	1.08	1.09	1.10	1.11	1.13	1.15	1.17
1.48	30.3	32.8	35.3	37.8	40.8	43.8	46.8	50.3	53.8	57.8	63	68	73	78	83	88	94	100	100	113	128	145	165
	26.9	29.4	31.9	34.4	37.4	40.4	43.4	46.9	50.4	54.4	59	64	69	74	79	84	90	96	96	109	124	142	162
	25.9	28.8	30.4	33.4	36.5	39.5	42.5	46.0	49.5	53.5	58	63	68	73	78	83	89	95	95	108	123	141	161
	...	...	...	...	...	24.6	27.6	312	34.7	38.7	44	49	54	59	64	69	75	81	81	94	109	126	146
1.50	...	20.3	22.8	25.3	28.3	31.3	34.4	37.9	41.4	45.4	50	55	60	65	70	75	81	87	87	100	115	133	153
1.51	27.7	30.2	32.7	35.2	38.2	41.2	44.2	47.7	51.2	55.2	60	65	70	75	80	85	91	97	97	110	125	143	163
1.52	24.1	26.6	29.1	31.7	34.7	37.7	40.7	44.2	47.7	51.7	57	62	67	72	77	82	88	94	94	107	122	139	159
	...	...	...	22.1	25.1	28.1	31.1	34.7	38.2	42.2	47	52	57	62	67	72	78	84	84	97	112	130	150
1.53	33.8	36.3	38.8	41.3	44.3	47.3	50.3	53.8	57.3	61.3	66	71	76	81	86	91	97	103	103	116	131	1467	169
	30.8	33.3	35.8	38.3	41.3	44.3	47.3	50.8	54.3	58.3	63	68	73	78	83	88	94	100	100	113	128	146	166

NOTE: ** Stock belt size 5V2650 & 5V3350 not shown
Arc & Length Factors are approximate values
Refer to Selection Procedure for more precise values

NOTE: Selection program VIA-VISA available at www.ptwizard.com.

SELECTION

DODGE®

5VX	D-V Wedge Single Belts to 200” POLYBAND to 200”

5V	D-V Wedge Single Belts over 200” POLYBAND over 200”

STOCK DRIVE SELECTION

Ratio	Stock Sheaves Diameter		1750 RPM Driver			1160 RPM Driver			870 RPM Driver			Belt Number and Approx. Center Distance**							
			Driven	HP/Belt		Driven	HP/Belt		Driven	HP/Belt		5VX	5VX	5VX	5VX	5VX	5VX	5VX	5VX
	Driver	Driven	RPM	5VX	5V	RPM	5VX	5V	RPM	5VX	5V	500	560	600	630	670	710	750	800
1.54	4.65	7.10	1138	10.7	6.7	765	7.6	5.0	565	5.9	4.0	15.7	18.7	20.7	22.2	24.2	26.2	28.2	30.8
	4.90	7.50	1135	11.9	7.9	752	8.4	5.8	565	6.53	4.6	15.2	18.2	20.2	21.7	23.7	25.7	27.7	30.2
	7.10	10.90	1134	21.7	17.3	752	15.3	12.5	565	11.9	10.0	10.7	13.7	15.8	17.3	19.3	21.3	23.3	25.8
	9.75	15.00	1133	32.8	27.5	751	23.2	20.2	565	18.0	15.9	...	...	...	..	13.8	15.9	17.9	20.4
1.55	5.20	8.00	1130	13.3	9.2	749	9.3	6.8	561	7.3	5.4	14.6	17.6	19.6	21.1	23.1	25.1	27.1	29.6
	6.70	10.30	1132	20.0	15.7	751	14.0	11.4	561	11.0	8.9	11.5	14.5	16.6	18.1	20.1	22.1	24.1	26.6
1.56	5.50	8.50	1125	14.6	10.5	746	10.3	7.7	558	8.0	6.1	13.9	16.9	19.0	20.4	22.5	24.5	26.5	29.0
	6.30	9.75	1124	18.2	14.0	745	12.8	10.1	558	9.9	8.0	12.3	15.3	17.3	18.8	20.8	22.8	24.8	27.3
	8.50	13.20	1122	27.7	22.9	744	19.5	16.7	558	15.1	13.1	...	...	12.7	14.3	16.3	18.3	20.3	22.8
	9.00	14.00	1121	29.7	24.8	743	21.0	18.1	558	16.3	14.2	...	...	...	13.2	15.2	17.3	19.3	21.8
	10.30	16.00	1123	34.9	29.4	744	24.8	21.7	558	19.3	17.1	...	...	...	...	...	14.6	16.6	19.1
1.57	8.00	12.50	1115	25.6	20.9	739	18.0	15.2	554	14.0	12.0	...	...	13.7	15.2	17.3	19.3	21.3	23.8
1.58	5.90	9.25	1109	16.4	12.3	735	11.6	8.9	551	9.0	7.1	13.0	16.0	18.0	19.5	21.5	23.5	25.5	28.1
	7.50	11.80	1107	23.5	19.0	734	16.5	13.8	551	12.8	10.8	...	12.7	14.7	16.2	18.2	20.2	22.2	24.7
	15.00	23.60	1110	...	...	735	37.8	33.7	551	29.7	27.0	...	...	...	...	...	...	...	...
1.59	11.80	18.70	1101	40.6	34.3	730	29.1	25.8	547	22.7	20.4	...	...	...	...	...	...	...	...
1.60	7.10	11.30	1094	21.8	17.4	725	15.3	12.6	544	11.9	10.0	...	13.4	15.4	169	18.9	20.9	23.0	25.5
ARC-LENGTH CORRECTION FACTOR —>												.82	.83	.85	.86	.87	.88	.89	.91
1.61	13.20	21.20	1086	45.6	38.4	720	33.0	29.4	540	25.8	23.4	...	...	...	...	...	...	...	...
1.63	4.40	7.10	1075	9.3	5.7	713	6.8	4.3	534	5.3	3.4	15.9	18.9	20.9	22.4	24.4	26.4	28.4	30.9
	4.65	7.50	1076	10.8	6.8	713	7.6	5.1	534	5.9	4.1	15.4	18.4	20.4	21.9	23.9	25.9	27.9	30.4
	9.25	15.00	1076	30.8	25.7	712	21.8	18.8	534	16.9	14.8	...	...	...	...	14.2	16.2	18.2	20.8
1.64	6.70	10.90	1069	20.2	15.7	709	14.1	11.4	530	10.9	9.0	11.0	14.0	16.0	17.6	19.6	21.6	23.6	26.1
1.65	4.90	8.00	1063	11.9	7.9	705	8.4	5.9	527	6.6	4.7	14.8	17.8	19.8	21.3	23.3	25.3	27.3	29.8
	5.20	8.50	1063	13.3	9.3	704	9.4	6.8	527	7.3	5.4	14.1	17.2	19.2	20.7	22.7	24.7	26.7	29.2
	5.50	9.00	1062	14.7	10.6	704	10.3	7.7	527	8.3	6.1	13.5	16.5	18.5	20.0	22.0	24.0	26.1	28.6
	6.30	10.30	1064	18.3	14.0	705	12.8	10.2	527	10.0	8.0	11.8	14.8	16.9	18.4	20.4	22.4	24.4	26.9
	8.50	14.00	1058	27.7	22.9	701	19.6	16.7	527	15.2	13.1	...	...	...	13.5	15.6	17.6	19.6	22.2
	9.75	16.00	1062	32.8	27.6	704	23.2	20.2	527	18.1	15.9	...	...	...	...	...	...	17.0	19.5
1.66	5.90	9.75	1052	16.5	12.3	697	11.6	9.0	524	9.0	7.1	12.6	15.6	17.6	19.1	21.1	23.1	25.1	27.6
	8.00	13.20	1055	25.6	21.0	700	18.1	15.3	524	14.0	12.0	...	...	13.1	14.6	16.6	18.7	20.7	23.2
	11.30	18.70	1054	38.8	32.8	698	27.7	24.4	524	21.6	19.3	...	...	...	...	...	...	...	...
1.67	7.10	11.80	1047	21.8	17.4	694	15.3	12.6	521	11.9	9.9	...	12.9	15.0	16.5	18.5	20.5	22.5	25.0
	9.00	15.00	1045	29.8	24.8	693	21.1	18.1	521	16.3	14.3	...	...	...	...	14.3	164	18.4	20.9
1.68	7.50	12.50	1044	23.5	19.0	692	16.5	13.8	518	12.8	10.8	...	...	14.1	15.6	17.6	19.6	21.6	24.2
1.69	5.50	9.25	1033	14.7	10.6	685	10.3	7.7	515	8.0	6.1	13.3	16.3	18.3	19.8	21.8	23.8	25.8	28.4
	14.00	23.60	1035	48.3	40.6	686	35.2	31.4	515	27.6	25.0	...	...	...	...	...	...	...	...
1.70	6.70	11.30	1028	20.1	15.8	684	14.1	11.4	512	10.9	9.0	10.6	13.7	15.7	17.2	19.2	21.2	23.3	25.8
	12.50	21.20	1031	43.2	36.5	682	31.1	27.6	512	24.3	21.9	...	...	...	...	...	...	...	...
1.72	4.40	7.50	1017	9.6	5.72	674	6.8	4.3	506	5.3	3.5	15.6	18.6	20.6	22.1	24.1	26.1	28.1	30.6
	10.90	18.70	1016	37.3	31.5	674	26.6	23.4	506	20.7	18.5	...	...	...	...	...	...	...	...
1.74	4.65	8.00	1008	10.6	6.9	668	7.6	5.1	500	6.0	4.1	15.0	18.0	20.0	21.5	23.5	25.5	27.5	30.0
	6.30	10.90	1005	18.3	14.1	666	12.9	10.2	500	10.0	8.1	11.3	14.3	16.3	17.8	19.9	21.9	23.9	26.4
	9.25	16.00	1007	30.8	25.8	668	21.8	18.9	500	16.9	14.8	...					15.3	17.3	19.9
1.75	4.90	8.50	1000	12.0	8.0	663	8.4	5.9	497	6.6	4.7	14.4	17.4	19.4	20.9	22.9	24.9	26.9	29.4
	5.20	9.00	1003	13.3	9.3	665	9.4	6.8	497	7.3	5.4	13.7	16.7	18.8	20.3	22.3	24.3	26.3	28.8
	16.00	28.00	997	...	...	661	40.4	36.0	497	31.8	29.0	...	...	...	...	...	...	...	...
ARC-LENGTH CORRECTION FACTOR —>													.83	.85	.86	.87	.88	.89	.91
1.76	5.90	10.30	995	16.5	12.4	660	11.6	9.0	494	9.0	7.1	...	15.1	17.1	18.6	20.7	22.7	24.7	2.72
	8.00	14.00	995	25.7	21.0	659	18.1	15.3	494	14.0	12.0	...	...	12.4	13.9	15.9	18.0	20.0	22.5
1.77	6.70	11.80	987	20.1	15.5	654	14.1	11.4	492	10.9	9.0	...	13.2	15.3	16.8	18.8	20.8	22.8	25.3
	7.10	12.50	977	21.8	17.4	655	15.3	12.6	492	11.9	9.9	...	12.3	14.4	15.9	17.9	19.9	21.9	24.5
	7.50	13.20	979	23.5	19.1	655	16.6	13.8	492	12.8	10.9	...	...	13.4	15.0	17.0	19.0	21.0	23.6
	8.50	15.00	987	27.8	23.0	654	19.6	16.7	492	15.2	13.2	...	...	...	...	14.7	16.7	18.8	21.3
1.79	5.20	9.25	975	13.3	9.3	647	9.4	6.8	486	7.3	5.4	...	16.5	18.5	20.0	22.1	24.1	26.1	28.6
	5.50	9.75	979	14.7	10.7	649	10.4	7.8	486	8.1	6.1	...	15.9	17.9	19.4	21.4	23.4	25.4	27.9
	9.00	16.00	980	29.8	24.9	649	21.1	18.2	486	16.4	14.3	...	...	...	...	...	15.5	17.5	20.1
	13.20	23.60	976	45.6	38.5	647	33.1	29.4	486	25.8	23.4	...	...	...	...	...	...	...	...

NOTE: * 5VX = Single and Polyband belts to 200” length
5V = Single and Polyband belts over 200” long

** Stock belt size 5VX530 not shown

NOTE: Selection program VIA-VISA available at www.ptwizard.com.

DODGE®

5VX	D-V Wedge Single Belts to 200” POLYBAND to 200”

5V	D-V Wedge Single Belts over 200” POLYBAND over 200”

STOCK DRIVE SELECTION

Ratio	Belt Number and Approx. Center Distance**																							
	5VX 850	5VX 900	5VX 950	5VX 1000	5VX 1060	5VX 1120	5VX 1180	5VX 1250	5VX 1320	5VX 1400	5VX 1500	5VX 1600	5VX 1700	5VX 1800	5VX 1900	5VX 2000	5V 2120	5V 2240	5V 2360	5V 2500	5V 2650	5V 2800	5V 3150	5V 3550
1.54	33.3	35.8	38.3	40.7	43.8	46.8	49.8	53.3	56.8	60.7	66	71	76	81	86	91	97	103	109	116	...	131	148	168
	32.7	35.2	37.7	40.2	43.2	46.2	49.2	52.7	56.2	60.2	65	70	75	80	85	90	96	102	108	115	...	130	148	168
	28.3	30.8	33.3	35.8	38.8	41.8	44.8	48.3	51.8	55.8	61	66	71	76	81	86	92	98	104	110	...	126	143	163
	22.9	25.4	27.9	30.4	33.5	36.5	39.5	43.0	46.5	50.5	56	61	66	71	76	81	86	92	99	105	...	120	138	158
1.55	32.1	34.6	37.1	39.6	42.6	45.6	48.6	52.1	55.6	59.6	65	70	75	80	85	90	96	102	108	114	...	130	147	167
	29.1	31.6	34.1	36.6	39.6	42.6	45.6	49.1	52.6	56.6	62	67	72	77	82	87	93	99	105	112	...	127	144	164
1.56	31.5	34.0	36.5	39.0	42.0	45.0	48.0	51.5	55.0	59.0	64	69	74	79	84	89	95	101	107	114	...	129	146	166
	29.9	32.3	34.9	37.4	40.4	43.4	46.4	49.9	53.4	57.4	62	67	72	77	82	87	93	99	105	112	...	127	145	165
	25.4	27.9	30.4	32.9	35.9	38.9	41.9	45.4	48.9	52.9	58	63	68	73	78	83	89	94	101	108	...	123	140	160
	24.3	26.8	29.3	31.8	34.8	37.9	40.9	44.4	47.9	51.9	57	62	67	72	77	82	88	94	100	107	...	122	139	159
	21.7	24.2	26.7	29.2	32.2	35.2	38.2	41.7	45.3	49.3	54	59	64	69	74	79	85	91	97	104	...	119	137	157
1.57	26.3	28.8	31.3	33.8	36.8	39.8	42.8	46.3	49.8	53.9	59	64	69	74	79	84	90	96	102	109	...	124	141	161
1.58	30.6	33.1	35.6	38.1	41.1	44.1	47.1	50.6	54.1	58.1	63	68	73	78	83	88	94	100	106	113	...	128	146	166
	27.3	29.8	32.3	34.8	37.8	40.8	43.8	47.3	50.8	54.8	60	65	70	75	80	85	91	97	103	110	...	125	142	162
	...	...	...	...	22.3	25.3	28.4	31.9	35.4	39.4	44	50	55	60	64	70	76	82	88	95	...	110	127	147
1.59	18.2	20.8	23.3	25.8	28.8	31.9	34.9	38.4	41.9	45.9	51	56	61	66	71	76	82	88	94	101	...	116	133	153
1.60	28.0	30.5	33.0	35.5	38.5	41.5	44.5	48.0	51.5	55.5	61	66	71	76	80	85	91	97	104	110	...	125	143	163
	.92	.93	.94	.95	.96	.97	.98	.99	1.00	1.01	1.02	1.03	1.04	1.05	1.06	1.07	1.08	1.09	1.10	1.11	1.12	1.13	1.15	1.17
1.61	...	...	20.1	22.6	25.7	28.7	31.7	35.3	38.8	42.8	48	53	58	63	68	73	79	85	91	98	...	113	130	150
1.63	33.4	35.9	38.4	40.9	43.9	46.9	49.9	53.5	57.0	61.0	66	71	76	81	86	91	97	103	109	116	...	131	148	168
	32.9	35.4	37.9	40.4	43.4	46.4	49.4	52.9	56.4	60.6	65	70	75	80	85	90	96	102	108	115	...	130	148	168
	23.3	25.8	28.3	30.8	33.8	36.8	39.9	43.4	46.9	50.9	56	61	66	71	76	81	87	93	99	106	...	121	138	158
1.64	28.6	31.1	33.6	36.1	39.1	42.1	45.1	48.6	52.1	56.1	61	66	71	76	81	86	92	98	104	111	...	126	144	164
1.65	32.3	34.8	37.3	39.8	42.8	45.8	48.8	52.3	55.8	59.8	65	70	75	80	84	90	96	102	108	114	...	130	147	167
	31.7	34.2	36.7	39.2	42.2	45.2	48.2	51.7	55.2	59.2	64	69	74	79	84	89	95	101	107	114	...	129	147	167
	31.1	33.6	36.1	38.6	41.6	44.6	47.6	51.1	54.6	58.6	64	69	74	79	84	89	95	101	107	114	...	129	146	166
	29.4	31.9	34.4	36.9	39.9	42.9	45.9	49.4	52.9	56.9	62	67	72	77	82	87	93	99	105	112	...	127	144	164
	24.7	27.2	29.7	32.2	35.2	38.2	41.2	44.7	48.3	52.3	57	62	67	72	77	82	88	94	100	107	...	122	140	160
	22.1	24.6	27.1	29.6	32.6	35.6	38.6	42.2	45.7	49.7	55	60	65	70	75	80	86	92	98	105	...	120	137	157
1.66	30.2	32.7	35.2	37.7	40.7	43.7	46.7	50.2	53.7	57.7	62	68	73	78	83	88	94	100	106	113	...	128	145	165
	25.7	28.2	30.7	33.2	36.3	39.3	42.3	45.8	49.3	53.3	58	63	68	73	78	83	89	95	101	108	...	123	141	161
	18.6	21.1	23.6	26.2	29.2	32.2	35.2	38.8	42.3	46.3	51	56	61	66	71	76	82	88	94	101	...	116	134	154
1.67	27.6	30.1	32.6	35.1	38.1	41.1	44.1	47.6	51.1	55.1	60	65	70	75	80	85	91	97	103	110	...	125	143	163
	23.5	26.0	28.5	31.0	34.0	37.0	40.0	43.5	47.1	51.1	56	61	66	71	76	81	87	93	99	106	...	121	139	159
1.68	26.7	29.2	31.7	34.2	37.2	40.2	43.2	46.7	50.2	54.2	59	64	69	74	79	84	90	96	102	109	...	124	142	162
1.69	30.9	33.4	35.9	38.4	41.4	44.4	47.4	50.9	54.4	58.4	63	68	73	78	83	88	94	100	106	113	...	128	146	166
	...	...	...	...	23.0	26.0	29.1	32.6	36.2	40.2	45	50	55	60	65	70	76	82	88	95	...	110	127	148
1.70	28.3	30.8	33.3	35.8	38.8	41.8	44.8	48.3	51.8	55.8	61	66	71	76	81	86	92	98	104	111	...	126	143	163
	...	...	20.6	23.1	26.2	29.2	32.2	35.8	39.3	43.3	48	53	58	63	68	73	79	85	91	98	...	113	131	151
1.72	33.1	35.6	38.1	40.6	43.6	46.6	49.6	53.1	56.6	60.6	66	71	76	81	86	91	97	103	109	116	...	131	148	168
	18.9	21.4	23.9	26.5	29.5	32.5	35.5	39.1	42.6	46.6	52	57	62	67	72	77	83	89	95	102	...	117	134	154
1.74	32.5	35.0	37.5	40.0	43.0	46.0	49.0	52.5	56.0	60.0	65	70	75	80	85	90	96	102	108	115	...	130	148	168
	28.9	31.4	33.9	36.4	39.4	42.4	45.4	48.9	52.4	56.4	61	66	71	76	81	86	92	98	105	111	...	126	144	164
	22.4	24.9	27.5	30.0	33.0	36.0	39.0	42.5	46.0	50.1	55	60	65	70	75	80	86	92	98	105	...	120	138	158
1.75	31.9	34.4	36.9	39.4	42.4	45.4	48.4	51.9	55.4	59.4	65	69	74	79	84	89	95	101	107	114	...	129	147	167
	31.3	33.8	36.3	38.8	41.8	44.8	47.8	51.3	54.8	58.8	64	67	74	79	84	89	94	101	107	114	...	129	146	166
	...	...	...	...	...	...	...	27.3	30.9	34.9	40	45	50	55	60	65	71	77	83	90	...	105	123	143
	.92	.93	.94	.95	.96	.97	.98	.99	1.00	1.01	1.02	1.03	1.04	1.05	1.06	1.07	1.08	1.09	1.10	1.11	1.12	1.13	1.15	1.17
1.76	29.7	32.2	34.7	37.2	40.2	43.2	46.2	49.7	53.2	57.2	62	67	72	77	82	87	93	99	105	112	120	127	145	165
	25.1	27.6	30.1	32.6	35.6	38.6	41.6	45.1	48.6	52.6	58	63	68	73	78	83	89	95	101	108	115	123	140	160
1.77	27.9	30.4	32.9	35.4	38.4	41.4	44.4	47.9	51.4	55.4	60	65	70	75	80	85	91	97	103	110	118	125	143	163
	27.0	29.5	32.0	34.5	37.5	40.5	43.5	47.0	50.5	54.5	60	65	70	75	80	84	91	97	103	110	117	125	142	162
	26.1	28.6	31.1	33.6	36.6	39.6	42.6	46.2	49.7	53.7	59	64	69	74	79	84	90	96	102	109	116	124	141	161
	23.8	26.3	28.9	31.4	34.4	37.4	40.4	43.9	47.4	51.4	56	61	66	71	76	81	87	93	99	106	114	121	139	159
1.79	31.1	33.6	36.1	38.6	41.6	44.6	47.6	51.1	54.6	58.6	64	69	74	79	84	89	95	101	10	114	121	129	146	166
	30.5	33.0	35.5	38.0	41.0	44.0	47.0	50.5	54.0	58.0	63	68	73	78	83	88	94	100	106	113	121	128	146	166
	22.6	25.1	27.6	30.2	33.2	36.2	39.2	42.7	46.2	50.2	55	60	65	70	75	80	86	92.3	98	105	113	120	138	158
	...	...	...	...	23.5	26.6	29.6	33.2	36.7	40.8	46	51	56	61	66	71	77	83	89	96.0	103	111	128	149

NOTE: ** Stock belt size 5V2650 & 5V3350 not shown
Arc & Length Factors are approximate values
Refer to Selection Procedure for more precise values

NOTE: Selection program VIA-VISA available at www.ptwizard.com.

SELECTION

DODGE®

5VX	D-V Wedge Single Belts to 200” POLYBAND to 200”

5V	D-V Wedge Single Belts over 200” POLYBAND over 200”

STOCK DRIVE SELECTION

Ratio	Stock Sheaves Diameter		1750 RPM Driver			1160 RPM Driver			870 RPM Driver			Belt Number and Approx. Center Distance**							
			Driven	HP/Belt		Driven	HP/Belt		Driven	HP/Belt		5VX	5VX	5VX	5VX	5VX	5VX	5VX	5VX
	Driver	Driven	RPM	5VX	5V	RPM	5VX	5V	RPM	5VX	5V	560	600	630	670	710	750	800	850
1.80	11.80	21.20	970	40.7	34.5	643	29.2	25.8	483	22.7	20.5	...	...	...	...	...	...	...	...
1.81	6.30	11.30	969	18.3	14.1	642	12.9	10.2	481	10.0	8.1	14.0	16.0	17.5	19.5	21.5	23.6	26.1	28.6
1.82	10.30	18.70	960	35.0	29.6	636	24.9	21.8	478	19.4	17.2	...	...	...	...	...	...	16.7	19.3
1.84	4.40	8.00	953	9.7	5.8	631	6.8	4.3	473	5.3	35.0	18.2	20.2	21.7	23.7	25.7	27.7	30.2	32.7
1.85	4.65	8.50	944	10.8	6.9	628	7.7	5.1	470	6.0	4.1	17.6	19.6	21.1	23.1	25.1	27.1	29.6	32.1
	4.90	9.00		12.0	8.0	626	8.5	5.9	470	6.6	4.7	17.0	19.0	20.5	22.5	24.5	26.5	29.0	31.5
1.86	5.90	10.90	940	16.5	12.4	623	11.6	9.0	468	9.0	7.1	14.6	16.6	18.1	20.2	22.2	24.2	26.7	29.2
1.87	7.10	13.20	935	21.8	17.5	620	15.4	12.7	465	11.9	10.0	11.7	13.7	15.3	17.3	19.3	21.3	23.9	26.4
	15.00	28.00	. . .	...	...	619	37.9	33.7	465	29.7	27.1	...	...	...	...	...	...	...	...
1.88	6.70	12.50	932	20.1	15.8	617	14.1	11.5	463	11.0	9.0	12.6	14.6	16.2	18.2	20.2	22.2	24.8	27.3
	7.50	14.00	929	23.6	19.1	618	16.6	13.8	463	12.9	10.9	...	12.7	14.3	16.3	18.3	20.4	22.9	25.4
	11.30	21.20		38.9	32.9	616	27.8	24.5	463	21.6	19.4	...	...	...	...	...	...	...	...
1.89	5.20	9.75	925	13.4	9.4	613	9.4	6.9	460	7.3	5.4	16.1	18.1	19.6	21.6	23.7	25.7	28.2	30.7
	5.50	10.30	927	14.7	10.7	614	10.4	7.8	460	8.1	6.2	15.4	17.4	18.9	21.0	23.0	25.0	27.5	30.0
	6.30	11.80	928	18.3	14.1	615	12.9	10.2	460	10.0	8.1	13.5	15.5	17.1	19.1	21.1	23.1	25.6	28.2
	8.00	15.00	925	25.7	21.1	615	18.1	15.3	460	14.0	12.0	...	...	13.0	15.0	17.1	19.1	21.7	24.2
	8.50	16.00		27.8	23.0	613	19.6	16.8	460	15.2	13.2	...	...	...	13.8	15.8	17.9	20.4	23.0
1.90	12.50	23.60	923	43.2	36.6	612	31.1	27.7	458	24.3	22.0	...	...	...	...	...	...	...	...
1.91	4.90	9.250	918	12.0	8.0	609	8.5	5.9	455	6.6	4.7	16.7	18.8	20.3	22.3	24.3	26.3	28.8	31.3
1.93	5.90	11.30	906	16.6	12.4	601	11.6	9.0	451	9.0	7.1	14.2	16.3	17.8	19.8	21.8	23.8	26.4	28.9
	9.75	18.70	908	32.9	27.7	602	23.3	20.3	451	18.1	16.0	...	...	...	...	...	...	17.1	19.7
1.95	4.40	8.50	896	9.7	5.8	594	6.9	4.3	446	5.4	3.5	17.8	19.8	21.3	23.3	25.3	27.3	29.8	32.3
	10.90	21.20	896	37.4	31.6	594	26.7	23.5	446	20.7	18.5	...	...	...	...	...	...	...	...
1.96	4.65	9.00	. . .	10.9	6.9	593	7.7	5.1	444	6.0	4.1	17.1	19.2	20.7	22.7	24.7	26.7	29.2	31.7
1.97	16.00	31.50	. . .	...	...	587	40.5	36.1	442	31.9	29.1	...	...	...	...	...	...	...	...
1.98	6.70	13.20	882	20.1	15.8	584	14.1	11.5	439	11.0	9.0	11.9	14.0	15.5	17.6	19.6	21.6	24.2	26.7
1.99	7.10	14.00	881	21.9	17.5	584	15.4	12.7	437	11.9	10.0	...	13.0	14.5	16.6	18.6	20.6	23.2	25.7
ARC-LENGTH CORRECTION FACTOR —>												**.83**	**.85**	**.86**	**.87**	**.88**	**.89**	**.91**	**.92**
2.00	5.20	10.30	875	13.4	9.4	580	9.4	6.9	435	7.3	5.5	15.6	17.6	19.2	21.2	23.2	25.2	27.7	30.2
	5.50	10.90	875	14.8	10.7	580	10.4	7.8	435	8.1	6.2	14.9	16.9	18.4	20.4	22.5	24.5	27.0	29.5
	6.30	12.50	875	18.4	14.2	580	12.9	10.3	435	10.0	8.1	12.9	14.9	16.4	18.5	20.5	22.5	25.1	27.6
2.01	4.65	9.25	870	10.9	6.9	577	7.7	5.1	433	6.0	4.1	16.9	18.9	20.5	22.5	24.5	26.5	29.0	31.5
	4.90	9.75	870	12.0	8.1	577	8.5	5.9	433	6.6	4.7	16.3	18.3	19.9	21.9	23.9	25.9	28.4	30.9
	7.50	15.00	869	23.6	19.1	576	16.6	13.9	433	12.9	10.9	...	...	13.3	15.4	17.4	19.5	22.0	24.5
	8.00	16.00	869	25.7	21.1	576	18.1	15.3	433	14.1	12.1	...	...	...	14.1	16.2	18.2	20.8	23.3
	11.80	23.60	870	40.7	34.5	578	29.2	25.9	433	22.8	20.5	...	.....	.....	.....	.....	.....	.....	...
	14.00	28.00	872	48.4	40.7	578	35.2	31.4	433	27.6	25.1	...	...	...	.....	.....	.....	.....	...
2.02	5.90	11.80	868	16.6	12.5	575	11.6	9.0	431	9.0	7.1	13.8	15.8	1.74	19.4	21.4	23.4	25.9	28.4
2.03	9.25	18.70	861	30.9	25.9	571	21.9	18.9	429	17.0	14.9	...	...	...	...	...	...	17.4	20.0
2.07	4.40	9.00	846	9.7	5.8	560	6.9	4.4	420	5.4	3.5	17.3	19.3	20.9	22.9	24.9	26.9	29.4	31.9
	5.50	11.30	844	14.8	10.7	559	10.4	7.8	420	8.1	6.2	14.5	16.6	18.1	20.1	22.1	24.1	26.7	29.2
	10.30	21.20	846	35.1	29.6	561	24.9	21.9	420	19.4	17.2	...	...	...	...	...	...	...	...
2.09	9.00	18.70	837	29.9	25.0	555	21.1	18.2	416	16.4	14.3	...	...	...	...	...	...	17.6	20.2
2.10	11.30	23.60	834	38.9	32.9	553	27.8	24.6	414	21.6	19.4	...	...	...	...	...	...	...	...
2.11	6.30	13.20	828	18.4	14.2	549	12.9	10.3	412	10.0	8.1	...	14.3	15.8	17.9	19.9	21.9	24.4	27.0
	6.70	14.00	831	20.1	15.9	551	14.2	11.5	412	11.0	9.0	...	13.2	14.8	16.9	18.9	20.9	23.5	26.0
	15.0	31.50	830	...	...	550	37.9	33.8	412	29.7	27.1	...	...	...	...	...	...	...	...
2.12	46.50	9.75	825	10.9	7.0	547	7.7	5.2	410	6.0	4.1	...	18.5	20.0	22.0	24.1	26.1	28.6	31.1
	5.20	10.90	826	13.4	9.4	548	9.4	6.9	410	7.3	5.5	...	17.1	18.6	20.7	22.7	24.7	27.2	29.7
2.13	4.40	9.25	822	9.7	5.8	545	6.9	4.4	408	5.4	3.5	...	19.1	20.6	22.7	24.7	26.7	29.2	31.7
	4.90	10.30	824	12.0	8.1	546	8.5	6.0	408	6.6	4.7	...	17.9	19.4	21.4	23.4	25.4	27.9	30.4
	7.10	15.00	822	21.9	17.5	545	15.4	12.7	408	11.9	10.0	...	...	13.6	15.6	17.7	19.8	22.3	24.8
	13.20	28.00	822	45.7	38.6	545	33.1	29.5	408	25.9	23.4	...	...	...	...	...	...	...	...
2.14	5.90	12.50	819	16.6	12.5	543	11.7	9.1	407	9.1	7.1	...	15.2	16.7	18.8	20.8	22.8	25.3	27.9
2.15	7.50	16.00	814	23.6	19.2	540	16.6	13.9	405	12.9	10.9	...	...	...	14.4	16.5	18.6	21.1	23.7
2.17	5.50	11.80	808	14.8	10.7	535	10.4	7.8	401	8.1	6.2	...	16.1	17.6	19.7	21.7	23.7	26.2	28.7
2.18	10.90	23.60	804	37.4	31.7	533	26.7	23.5	399	20.7	18.6	...	...	...	...		...	...	...

NOTE: * 5VX = Single and Polyband belts to 200” length
5V = Single and Polyband belts over 200” long

** Stock belt size 5VX530 not shown

NOTE: Selection program VIA-VISA available at www.ptwizard.com.

DODGE®

5VX	D-V Wedge Single Belts to 200” POLYBAND to 200”

5V	D-V Wedge Single Belts over 200” POLYBAND over 200”

STOCK DRIVE SELECTION

Speed Ratio	Belt Number and Approx. Center Distance**																							
	5VX 900	5VX 950	5VX 1000	5VX 1060	5VX 1120	5VX 1180	5VX 1250	5VX 1320	5VX 1400	5VX 1500	5VX 1600	5VX 1700	5VX 1800	5VX 1900	5VX 2000	5V 2120	5V 2240	5V 2360	5V 2500	5V 2650	5V 2800	5V 3000	5V 3150	5V 3550
1.80	18.5	21.1	23.6	26.7	29.7	32.6	36.3	39.8	43.8	49	54	59	64	69	74	80	86	92	99	106	114	...	132	152
1.81	31.1	33.6	36.1	39.1	42.1	45.1	48.6	52.1	56.1	61	66	71	76	81	86	92	98	104	111	119	126	...	144	164
1.82	21.8	24.4	26.9	29.9	33.0	36.0	39.5	43.0	47.0	52	57	62	67	72	77	83	89	95	102	110	117	...	135	155
1.84	35.2	37.7	40.2	43.2	46.2	49.2	52.7	56.2	60.2	65	70	75	80	85	90	96	102	108	115	123	130	...	148	168
1.85	34.6	37.1	39.6	42.6	45.6	28.6	52.1	55.6	59.6	65	70	75	80	85	90	96	102	108	115	122	130	...	147	167
	34.0	36.5	39.0	42.0	45.0	48.0	51.5	55.0	59.0	64	69	74	79	84	89	95	101	107	114	122	129	...	147	167
1.86	31.7	34.2	36.7	39.7	42.7	45.7	49.2	52.7	56.8	62	67	72	77	82	87	93	99	105	112	119	127	...	144	164
1.87	28.9	31.4	33.9	36.9	39.9	42.9	46.5	50.0	54.0	59	64	69	74	79	84	90	96	102	109	117	124	...	142	162
	...	...	...	...	...	24.4	28.0	31.6	35.6	41	46	51	56	61	66	72	78	84	91	99	106		124	144
1.88	29.8	32.3	34.8	37.8	40.8	43.8	47.3	50.8	54.9	60	65	70	75	80	85	91	97	103	110	117	125	...	142	162
	27.9	30.4	33.0	36.0	39.0	42.0	45.5	49.0	53.0	58	63	68	73	78	83	89	95	101	108	116	123	...	141	161
	18.8	21.4	24.0	27.0	30.1	33.1	36.6	40.2	44.2	49	54	59	64	69	74	80	86	92	99	107	114	...	132	152
1.89	33.2	35.7	38.2	41.2	44.2	47.2	50.7	54.2	58.2	63	68	73	78	83	88	94	100	106	113	121	128	..	146	166
	32.5	35.0	37.5	40.5	43.5	46.5	50.0	63.5	57.5	63	68	73	78	83	88	94	100	106	113	120	128	...	145	165
	30.7	33.2	35.7	38.7	41.7	44.7	48.2	51.7	55.7	61	66	71	76	81	86	92	98	104	111	118	126	...	143	163
	26.7	29.2	31.7	34.8	37.8	40.8	44.3	47.8	51.8	57	62	67	72	77	82	88	94	100	107	114	122	...	139	159
	25.5	28.0	30.5	33.5	36.6	39.6	43.1	46.6	50.6	56	61	66	71	76	81	87	93	99	105	113	121	...	138	158
1.90	...	...	20.9	24.0	27.1	30.1	33.7	37.2	41.3	46	51	56	61	66	71	77	83	89	97	104	112	...	129	149
1.91	33.8	36.3	38.8	41.8	44.8	47.8	51.3	54.8	58.8	64	69	74	79	84	89	95	101	107	114	121	129	...	146	166
1.93	31.4	33.9	36.4	39.4	42.4	45.4	48.9	52.4	56.4	61	66	71	76	81	86	92	98	104	111	119	126	...	144	164
	22.2	24.8	27.3	30.3	33.4	36.4	39.9	43.4	47.4	52	57	62	67	73	78	84	90	96	103	110	118	...	135	155
1.95	34.8	37.3	39.8	42.8	45.8	48.8	52.3	55.8	59.8	65	70	75	80	85	90	96	102	108	114	122	130	...	147	167
	19.1	21.7	24.2	27.3	30.4	33.4	36.9	40.5	44.5	50	55	60	65	70	74	81	87	93	100	107	115	...	132	152
1.96	34.2	36.7	39.2	42.2	45.2	48.2	51.7	55.2	59.2	64	69	74	79	84	89	95	101	107	114	122	129	...	147	167
1.97	...	...	...	...	...	...	...	27.6	31.7	37	42	47	52	57	62	68	74	80	87	95	102	...	120	140
1.96	29.2	31.7	34.2	37.2	40.2	43.2	46.8	50.3	54.3	59	64	69	74	79	84	90	96	102	109	117	124	...	142	162
1.99	28.2	30.7	33.2	36.3	39.3	42.3	45.8	49.3	53.3	58	63	68	73	78	83	89	95	101	108	116	123	...	141	161
	.93	**.94**	**.95**	**.96**	**.97**	**.98**	**.99**	**1.00**	**1.01**	**1.02**	**1.03**	**1.04**	**1.05**	**1.06**	**1.07**	**1.08**	**1.09**	**1.10**	**1.11**	**1.12**	**1.13**		**1.14**	**1.16**
2.00	32.7	35.2	37.7	40.8	43.8	46.8	50.3	53.8	57.8	63	68	73	78	83	88	94	100	106	113	120	128	...	145	165
	32.0	34.5	37.0	40.0	43.0	46.0	49.5	53.1	57.1	62	67	72	77	82	87	93	99	105	112	120	127	...	147	165
	30.1	32.6	35.1	38.1	41.1	44.1	47.6	51.1	55.2	60	65	70	75	80	85	91	97	103	110	118	125	...	143	163
2.01	34.0	36.5	39.0	42.0	45.0	48.0	51.5	55.0	59.0	64	69	74	79	84	89	95	101	107	114	122	129	...	147	167
	33.4	35.9	38.4	41.4	44.4	47.4	50.9	54.4	589.4	63	68	73	78	83	88	94	100	106	113	121	128	...	146	166
	27.1	29.6	32.1	35.1	38.1	41.2	44.7	48.2	52.2	57	62	67	72	77	82	88	94	100	107	115	122	...	140	160
	25.9	28.4	30.9	33.9	36.9	40.0	43.5	47.0	51.0	56	61	66	71	76	81	87	93	99	106	114	121	...	139	159
	...	...	21.4	24.5	27.6	30.6	34.2	37.7	41.8	47	52	57	62	67	72	78	84	90	97	105	112	...	130	150
	...	...	...	...	...	25.0	28.7	32.3	36.3	41	47	51	57	62	67	73	79	85	92	99	107	...	124	144
2.02	31.0	35.5	36.0	39.0	42.0	45.0	48.5	52.0	56.0	61	66	71	76	81	86	92	98	104	111	119	126	...	144	164
2.03	22.6	25.1	27.6	30.7	33.7	36.7	40.3	43.8	47.8	53	58	63	68	73	78	84	90	96	103	110	118	...	135	155
2.07	34.4	36.9	39.4	42.4	45.4	48.4	51.9	55.4	59.4	64	69	74	79	84	89	95	101	107	114	122	129	...	147	167
	31.7	34.2	36.7	39.7	42.7	45.7	49.2	52.7	56.7	62	67	72	77	82	87	93	99	105	112	119	127	...	144	164
	19.5	22.1	24.7	27.7	30.8	33.8	37.4	40.9	44.9	50	55	60	65	70	75	81	87	93	100	108	115	...	133	153
2.09	22.7	25.3	27.8	30.9	33.9	36.9	40.5	44.0	48.0	53	58	63	68	73	78	84	90	96	103	111	118	...	136	156
2.10	...	...	21.7	24.8	27.9	31.0	34.5	38.1	42.1	47	52	57	62	67	72	78	84	90	97	105	112	...	130	150
2.11	29.5	32.0	34.5	37.5	40.5	43.5	47.1	50.6	54.6	60	65	70	75	80	85	91	97	103	110	117	125	135	142	162
	28.5	31.0	33.6	36.6	39.6	42.6	46.1	49.6	53.6	59	64	69	74	79	84	90	96	102	109	116	124	...	141	161
	...	...	...	...	...	...	...	28.3	32.4	38	43	48	53	58	63	69	75	81	88	96	103	...	121	141
2.12	33.6	36.1	38.6	41.6	44.6	47.6	51.1	54.6	58.6	64	69	74	79	84	89	95	101	107	114	121	129	137	146	166
	32.2	34.7	37.2	40.3	43.3	46.3	49.8	53.3	57.3	62	67	72	77	82	87	93	99	105	112	120	127	139	145	165
2.13	34.2	36.7	39.2	42.2	45.2	48.2	51.7	55.2	59.2	64	69	74	79	84	89	95	101	107	114	122	129	139	147	167
	33.0	35.5	38.0	41.0	44.0	47.0	50.5	54.0	58.0	63	68	73	78	83	88	94	100	106	113	121	128	138	146	166
	27.4	29.9	32.4	35.4	38.4	41.5	45.0	48.5	52.5	58	63	68	73	78	83	89	95	101	108	115	123	133	140	160
	...	...	...	...	...	25.6	29.2	32.8	36.9	42	47	52	57	62	67	73	79	85	92	100	107	117	125	145
2.14	30.4	32.9	35.4	38.4	41.4	44.4	47.9	51.4	55.5	60	65	70	75	80	85	91	98	104	111	118	126	136	143	163
2.15	26.2	28.7	31.3	34.3	37.3	40.3	43.8	47.4	51.4	56	61	66	71	76	81	87	93	99	106	114	121	131	139	159
2.17	31.3	33.8	36.3	39.3	42.3	45.3	48.8	52.3	56.3	61	66	71	76	81	86	92	98	104	111	119	126	136	144	164
2.18	...	...	22.0	25.1	28.2	31.3	34.8	38.4	42.4	47	53	58	63	68	73	79	85	91	98	105	113	123	130	150

NOTES: ** Stock belt size 5V2650 & 5V3350 not shown
Arc & Length Factors are approximate values
Refer to Selection Procedure for more precise values

NOTE: Selection program VIA-VISA available at www.ptwizard.com.

SELECTION

DODGE®

5VX	D-V Wedge Single Belts to 200” POLYBAND to 200”

5V	D-V Wedge Single Belts over 200” POLYBAND over 200”

STOCK DRIVE SELECTION

Ratio	Stock Sheaves Diameter		1750 RPM Driver			1160 RPM Driver			870 RPM Driver			Belt Number and Approx. Center Distance**						
			Driven	HP/Belt		Driven	HP/Belt		Driven	HP/Belt		5VX	5VX	5VX	5VX	5VX	5VX	5VX
	Driver	Driven	RPM	5VX	5VX	RPM	5VX	5VX	RPM	5VX	5VX	600	630	670	710	750	800	850
2.19	9.75	21.20	800	32.9	27.7	531	23.3	20.4	397	18.1	16.0	...	...	...	...	...	...	17.3
2.20	5.20	11.30	797	13.4	9.4	528	9.5	6.9	395	7.4	5.5	16.8	18.3	20.3	22.3	24.4	26.9	29.4
2.21	8.50	18.70	790	27.8	23.1	524	19.6	16.8	394	15.2	13.2	...	...	...	...	15.3	17.9	20.5
2.24	4.40	9.75	780	9.7	5.8	517	6.9	4.4	388	5.4	3.5	18.7	20.2	22.2	24.2	26.3	28.8	31.3
	4.65	10.30	781	10.9	7.0	517	7.7	5.2	388	6.0	4.1	18.0	19.6	21.6	23.6	25.6	28.1	30.6
	6.30	14.00	781	18.4	14.2	517	12.9	10.3	388	10.0	8.1	13.5	15.1	17.1	19.2	21.2	23.8	26.3
2.25	4.90	10.90	778	12.1	8.1	516	8.5	6.0	387	6.6	4.7	17.3	18.9	20.9	22.9	24.9	27.4	29.9
	12.50	28.00	778	43.3	36.6	516	31.2	27.7	387	24.3	22.0	...	...	...	...	...	...	...
2.26	5.90	13.20	775	16.6	12.5	516	11.7	9.1	385	9.1	7.2	14.5	16.1	18.1	20.2	22.2	24.7	27.3
	6.70	15.00	775	20.2	15.9	514	14.2	11.5	385	11.0	9.1	12.3	13.8	15.9	18.0	20.0	22.6	25.1
	14.00	31.50	775	48.4	40.7	514	35.3	31.5	385	27.6	25.1	...	...	...	...	...	...	...
2.27	7.10	16.00	770	21.9	17.55	511	15.4	12.7	383	11.9	10.0	...	...	14.7	16.8	18.8	21.4	23.9
2.29	5.20	11.80	763	13.4	9.4	506	9.5	6.9	380	7.4	5.5	16.3	17.8	19.9	21.9	23.9	26.4	29.0
2.30	5.50	12.50	762	14.8	10.8	505	10.4	7.8	378	8.1	6.2	15.5	17.0	19.0	21.1	23.1	25.6	28.1
	10.30	23.60	760	35.1	29.7	503	25.0	21.9	378	19.4	17.2	...	...	...	...	...	...	...
2.31	9.25	21.20	729	30.9	25.9	503	21.9	19.0	377	17.0	14.9	...	...	...	...	...	...	17.6
2.33	4.90	11.30	750	12.1	8.1	497	8.5	6.0	373	6.6	4.8	17.0	18.5	20.5	22.5	24.6	27.1	29.6
2.35	8.00	18.70	713	25.8	21.2	493	18.1	15.4	370	14.1	12.1	...	...	...	...	15.6	18.2	20.8
	16.00	37.50	744	...	...	493	40.5	36.1	370	31.9	29.1	...	...	...	...	...	...	...
2.37	4.40	10.30	738	9.7	5.9	489	6.9	4.4	367	5.4	3.5	18.2	19.7	21.8	23.8	25.8	28.3	30.8
	4.65	10.90	737	10.9	7.0	489	7.7	5.2	367	6.0	4.1	17.5	19.0	21.1	23.1	25.1	27.6	30.1
	9.00	21.20	738	29.9	25.0	489	21.1	18.3	367	16.4	14.4	...	...	...	...	...	...	17.7
2.38	11.80	28.00	734	40.8	34.6	486	29.2	25.9	366	22.8	20.5	...	...	...	...	...	...	...
2.40	5.90	14.00	730	16.6	12.5	484	11.7	9.1	363	9.1	7.2	13.8	15.3	17.4	19.4	21.5	24.0	26.6
	6.30	15.00	728	18.4	14.2	483	12.9	10.3	363	10.0	8.1	12.5	14.1	16.2	18.3	20.3	22.9	25.4
	13.20	31.50	730	45.7	38.6	484	33.1	29.5	363	25.9	23.5	...	...	...	...	...	...	...
2.41	6.70	16.00	726	20.2	15.9	482	14.2	11.5	361	11.0	9.1	.....	12.8	15.0	17.0	19.1	21.7	24.2
2.43	5.20	12.50	720	13.5	9.5	477	9.5	6.9	358	7.4	5.5	15.7	172	19.3	21.3	23.3	25.8	28.4
	5.50	13.20	721	14.8	10.8	478	10.4	7.9	358	8.1	6.2	14.8	16.4	18.4	20.5	22.5	25.0	27.6
2.44	4.90	11.80	718	12.1	8.1	476	8.5	6.0	357	6.6	4.78	16.5	18.1	20.1	22.1	24.1	26.7	29.2
	9.75	23.60	719	32.9	27.7	476	23.4	20.4	357	18.1	16.1	..	...	...	...	...	...	...
2.48	4.65	11.30	711	10.9	7.0	471	7.71	5.2	351	6.0	4.2	17.2	18.7	20.7	22.7	24.7	27.3	29.8
2.49	11.30	28.00	703	38.9	33.0	466	27.8	24.6	349	21.7	19.4	...	...	...	...	...	...	
ARC-LENGTH CORRECTION FACTOR —>												**.84**	**.84**	**.86**	**.87**	**.88**	**.89**	**.91**
2.51	4.40	10.90	697	9.7	5.9	462	6.9	4.4	347	5.4	3.5	17.7	19.2	21.2	23.3	25.3	27.8	30.3
	7.50	18.70	696	23.6	19.2	462	16.6	13.9	347	12.9	10.9	...	...	...	...	15.9	18.6	21.2
	8.50	21.20	697	27.9	23.1	462	19.7	16.8	347	15.2	13.2	...	...	...	...	...	...	18.1
	15.00	37.50	697	...	...	462	37.9	33.9	347	29.8	27.1	...	...	...	...	...	...	...
2.53	12.50	31.50	691	43.3	36.7	458	31.2	27.7	344	24.3	22.0	...	...	...	...	...	...	...
2.56	6.30	16.00	682	18.4	14.2	452	12.9	10.3	340	10.0	8.1	...	13.1	15.2	17.3	19.4	22.0	24.5
2.57	4.65	11.80	681	10.9	7.0	451	7.7	5.2	339	6.0	4.2	16.7	18.2	20.3	22.3	24.3	26.8	29.4
	5.20	13.20	681	13.5	9.5	452	9.5	6.9	339	7.4	5.5	15.0	16.6	18.6	20.7	22.7	25.2	27.8
	5.50	14.00	680	14.8	10.8	451	10.4	7.9	339	8.1	6.2	14.0	15.6	17.7	19.7	21.8	24.3	26.8
	5.90	15.00	681	16.6	12.5	452	11.7	9.1	339	9.1	7.2	12.8	14.4	16.5	18.5	20.6	23.1	25.7
	9.25	23.60	681	30.9	25.9	452	21.9	19.0	339	17.0	14.9	...	...	...	...	...	...	...
2.58	4.90	12.50	677	12.1	8.1	449	8.5	6.0	337	6.6	4.8	...	17.4	19.5	21.5	23.5	26.1	28.6
	10.90	28.00	677	37.4	31.7	449	26.7	23.5	337	20.8	18.6	...	...	...	...	...	...	...
2.60	4.40	11.30	672	9.8	5.9	445	6.9	4.4	335	5.4	3.5	...	18.9	20.9	22.9	24.9	27.9	30.0
2.64	9.00	23.60	663	29.9	25.0	439	21.2	18.3	330	16.4	14.4	...	...	...	...	...	...	...
2.66	7.10	18.70	659	21.9	17.6	437	15.4	12.7	327	12.0	10.0	...	...	...	...	16.2	15.8	26.5
2.67	8.00	21.20	655	25.8	21.2	434	18.2	15.4	326	14.1	12.1	...	...	...	...	...	...	18.4
2.68	11.80	31.50	652	40.8	34.6	432	29.2	25.9	325	22.8	20.5	...	...	...	...	...	...	...
2.69	14.00	37.50	650	48.4	40.7	431	35.3	31.5	323	27.6	25.1	...	...	...	...	...	...	...
2.72	4.40	11.80	643	9.8	5.9	426	6.9	4.4	320	5.4	3.5	...	18.4	20.4	22.5	24.5	27.0	29.5
2.73	4.65	12.50	642	10.9	7.0	426	7.7	5.2	319	6.0	4.2	...	17.6	19.6	21.7	23.7	26.2	28.8
	4.90	13.20	641	12.1	8.1	425	8.5	6.0	319	6.6	4.8	...	16.8	18.8	20.9	22.9	25.5	28.0
	5.20	14.00	642	13.5	9.5	426	9.5	6.9	319	7.4	5.5	...	15.8	17.9	19.9	22.0	24.5	27.1

NOTE: * 5VX = Single and Polyband belts to 200” length
5V = Single and Polyband belts over 200” long

** Stock belt size 5VX530 not shown

NOTE: Selection program VIA-VISA available at www.ptwizard.com.

DODGE®

5VX	D-V Wedge Single Belts to 200” POLYBAND to 200”

5V	D-V Wedge Single Belts over 200” POLYBAND over 200”

STOCK DRIVE SELECTION

Ratio	Belt Number and Approx. Center Distance																								
	5VX 900	5VX 950	5VX 1000	5VX 1060	5VX 1120	5VX 1180	5VX 1250	5VX 1320	5VX 1400	5VX 1500	5VX 1600	5VX 1700	5VX 1800	5VX 1900	5VX 2000	5V 2120	5V 2240	5V 2360	5V 2500	5V 2650	5V 2800	5V 3000	5V 3150	5V 3350	5V 3550
2.19	19.9	22.5	25.0	28.1	31.2	34.2	37.8	41.3	45.3	50	55	60	65	70	75	82	88	94	101	108	116	126	133	...	153
2.20	31.9	34.4	36.9	39.9	42.9	45.9	49.4	53.0	57.0	62	67	72	77	82	87	93	99	105	112	120	127	137	145	...	165
2.21	23.1	25.6	28.2	31.2	34.3	37.3	40.8	44.3	48.4	53	58	63	68	73	78	84	90	96	103	111	118	129	136	...	156
2.24	33.8	36.3	38.8	41.8	44.8	47.8	51.3	54.8	58.8	64	69	74	79	84	89	95	101	107	114	121	129	139	146	...	166
	33.1	35.6	38.2	41.2	44.2	47.2	50.7	54.2	58.2	63	68	73	78	83	88	94	100	106	113	121	128	138	146	...	166
	28.8	31.3	33.8	36.9	39.9	42.9	46.4	49.9	53.9	59	64	69	74	79	84	90	96	102	109	117	124	134	142	...	162
2.25	32.5	35.0	37.5	40.5	43.5	46.5	50.0	53.5	57.5	62	68	73	78	83	88	94	100	106	113	120	128	138	145	...	165
	...	...	...	...	22.9	26.0	29.7	33.3	37.4	43	48	53	58	63	68	74	80	86	93	100	108	118	125	...	145
2.26	29.8	32.3	34.8	37.8	40.8	43.8	47.4	50.9	54.9	60	65	70	75	80	85	91	97	103	110	117	125	135	142	...	162
	27.7	30.2	32.7	35.7	38.7	41.8	45.3	48.8	52.8	58	63	68	73	78	83	89	95	101	108	115	123	133	140	...	160
	...	...	...	...	...	...	25.2	28.9	33.1	38	43	48	54	59	64	70	76	82	89	96	104	114	121	...	141
2.27	26.5	29.0	31.5	34.6	37.6	40.6	44.1	47.6	51.7	57	62	67	72	77	82	88	94	100	107	114	122	132	139	...	159
2.29	31.5	34.0	36.5	39.5	42.5	45.5	49.0	52.6	56.6	62	67	72	77	82	87	93	99	105	112	119	127	137	144	...	164
2.30	30.7	33.2	35.7	38.7	41.7	44.7	48.2	51.7	55.8	61	66	71	76	81	86	92	98	104	111	118	126	136	143	...	163
	...	19.8	22.4	25.5	28.6	31.7	35.2	38.8	42.9	48	53	58	63	68	73	79	85	91	98	106	113	123	131	...	151
2.31	20.2	22.8	25.4	28.5	31.5	34.6	38.1	41.7	45.7	51	56	61	66	71	76	82	88	94	101	108	116	126	133	...	153
2.33	32.1	34.6	37.1	40.1	43.2	46.2	49.7	53.2	57.2	62	67	72	77	82	87	93	99	105	112	120	127	137	145	...	165
2.35	23.4	26.0	28.5	31.6	34.6	37.6	41.2	44.7	48.7	54	59	64	69	74	79	85	91	97	104	111	119	129	136	...	156
	...	...	...	...	...	...	...	...	...	31	36	42	47	52	57	63	69	75	82	120	97	107	115	...	135
2.37	33.3	35.8	38.3	41.3	44.4	47.4	50.9	54.4	58.4	63	68	73	78	83	88	94	100	106	113	121	128	138	146	...	166
	32.6	35.2	37.7	41.7	43.7	46.7	502	53.7	57.7	63	68	3	78	83	88	94	100	106	113	120	128	138	145	...	165
	20.4	23.0	25.6	28.6	31.7	34.7	38.3	41.8	45.9	51	56	61	66	71	76	82	88	94	101	109	116	125	134	...	154
2.38	...	...	...	...	23.3	26.5	30.2	33.8	37.9	43	48	53	58	63	68	74	80	86	93	101	108	118	126	...	146
2.40	29.1	31.6	34.1	37.1	40.2	43.2	46.7	50.2	54.2	59	64	69	74	79	84	90	96	102	109	117	124	134	142	...	162
	27.9	30.5	33.0	36.0	39.0	42.1	45.6	49.1	53.1	58	63	68	73	78	83	89	95	101	108	116	123	133	141	...	161
	...	...	...	...	...	...	25.8	29.5	33.6	39	44	49	54	59	64	70	76	82	89	97	105	115	122	...	142
241	26.8	29.3	31.8	34.9	37.9	40.9	44.4	48.0	52.0	57	62	67	72	77	82	88	94	100	107	115	122	132	140	...	160
2.43	30.9	33.4	35.9	38.9	41.9	45.0	48.5	52.0	56.0	61	66	71	76	81	86	92	98	104	111	119	126	136	144	...	164
	30.1	32.6	35.1	38.1	41.1	44.2	47.7	51.2	55.2	60	65	70	75	80	85	91	97	103	110	118	125	135	143	...	163
2.44	31.7	34.2	36.7	39.7	42.7	45.8	49.3	52.8	56.8	62	67	72	77	82	87	93	99	105	112	119	127	137	144	...	164
	...	20.1	22.8	25.9	29.0	32.1	35.6	39.2	43.3	48	53	58	76	68	73	80	86	92	99	106	114	125	131	...	151
2.46	32.3	34.8	37.3	40.3	43.3	46.4	49.9	53.4	57.4	62	67	72	77	82	87	93	99	105	112	120	127	137	145	...	165
2.49	...	...	...	...	23.7	26.8	30.5	34.1	38.2	43	48	53	59	64	69	75	81	87	94	101	109	119	126	...	146
	.92	**.93**	**.94**	**.95**	**.96**	**.97**	**.98**	**.99**	**1.00**	**1.01**	**1.03**	**1.04**	**1.05**	**1.06**	**1.07**	**1.08**	**1.08**	**1.09**	**1.10**	**1.10**	**1.12**	**1.13**	**1.14**	**1.15**	**1.16**
2.51	32.8	35.3	37.8	40.9	43.9	46.9	50.4	53.9	57.9	63	68	73	78	83	88	94	100	106	113	120	128	138	145	...	165
	23.8	26.3	28.9	31.9	35.0	38.0	41.5	45.1	49.1	54	59	64	69	74	79	85	91	97	104	112	119	129	137	...	157
	20.7	23.3	25.9	29.0	32.0	35.1	38.7	42.2	46.2	51	56	61	66	71	76	82	88	94	101	109	117	127	134	...	154
	...	...	...	...	...	...	...	...	...	32	37	42	47	53	58	64	70	76	83	91	98	108	116	...	136
2.53	...	...	...	...	...	...	26.2	29.9	34.1	39	44	49	55	60	65	71	77	83	90	97	105	115	123	...	143
2.56	27.1	29.6	32.1	35.2	38.2	41.2	44.7	48.3	52.3	57	62	67	72	77	82	88	94	100	107	115	122	132	140	...	160
2.57	31.9	34.4	36.9	39.9	42.9	45.9	49.5	53.0	57.0	62	67	72	77	82	87	93	99	105	112	120	127	137	115	...	165
	30.3	32.8	35.3	38.3	41.4	44.4	47.9	51.4	55.4	60	65	70	75	80	85	91	97	103	110	118	125	135	143	...	163
	29.4	31.9	34.4	37.4	40.5	43.5	47.0	50.5	54.5	59	64	70	75	80	85	91	97	103	110	117	125	135	142	...	162
	28.2	30.8	33.3	36.3	39.3	42.3	45.9	49.4	5.4	58	63	68	73	78	83	89	95	101	108	116	124	134	141	...	161
	...	20.4	23.1	26.2	29.3	32.4	36.0	39.5	43.6	49	54	58	64	67	74	80	86	92	99	106	114	124	132	...	152
2.58	31.1	33.6	36.1	39.2	42.2	45.2	48.7	52.2	56.2	61	66	71	76	81	86	92	98	104	111	119	126	136	144	154	164
	...	...	...	...	23.9	27.1	30.8	34.4	38.5	44	49	54	57	64	69	75	81	87	94	102	109	119	127	137	147
2.60	32.5	35.0	37.5	40.5	43.5	46.5	50.1	53.6	57.6	63	68	73	78	83	88	94	100	106	113	120	128	138	145	155	165
2.64	...	20.6	23.3	26.4	29.5	32.6	36.2	39.7	43.8	49	54	59	64	69	74	80	86	92	99	107	114	124	132	142	152
2.66	24.0	26.6	29.2	32.2	35.3	38.3	41.8	45.4	49.4	54	59	64	69	74	79	86	92	98	105	112	120	130	137	147	157
2.67	21.0	23.6	26.2	29.3	32.4	35.5	39.0	42.6	46.6	52	57	62	67	72	77	83	89	95	102	109	117	127	134	144	154
2.68	...	...	...	...	...	...	26.7	30.4	34.6	40	45	50	55	60	65	71	77	83	90	98	106	116	123	133	143
2.69	...	...	...	...	...	...	...	...	...	32	38	43	48	53	58	65	71	77	84	91	99	109	116	127	136
2.72	32.1	34.6	37.1	40.1	43.1	46.1	49.6	53.1	57.2	62	67	72	77	82	87	93	99	105	112	120	127	137	145	155	165
2.73	31.3	33.8	36.3	39.3	42.4	45.4	48.9	52.4	56.4	61	66	71	76	81	86	92	98	101	111	119	126	136	144	154	164
	30.5	33.0	35.5	38.6	41.6	44.6	48.1	51.6	55.6	61	66	71	76	81	86	92	98	104	111	118	126	136	143	153	163
	29.6	32.1	34.6	37.7	40.7	43.7	47.2	50.7	54.7	60	65	70	75	80	85	91	97	103	110	117	125	135	142	152	162

NOTES: ** Stock belt size 5V2650 & 5V3350 not shown
Arc & Length Factors are approximate values

Refer to Selection Procedure for more precise values

NOTE: Selection program VIA-VISA available at www.ptwizard.com.

SELECTION

DODGE®

5VX	D-V Wedge Single Belts to 200” POLYBAND to 200”

5V	D-V Wedge Single Belts over 200” POLYBAND over 200”

STOCK DRIVE SELECTION

Ratio	Stock Sheaves Diameter		1750 RPM Driver			1160 RPM Driver			870 RPM Driver			Belt Number and Approx. Center Distance**						
	Driver	Driven	Driven RPM	HP/Belt 5VX	HP/Belt 5VX	Driven RPM	HP/Belt 5VX	HP/Belt 5VX	Driven RPM	HP/Belt 5VX	HP/Belt 5VX	5VX 600	5VX 630	5VX 670	5VX 710	5VX 750	5VX 800	5VX 850
2.74	5.90	16.00	638	16.6	12.5	423	11.7	9.1	318	9.1	7.2	...	13.3	15.5	17.6	19.7	22.2	24.8
	10.30	28.00	640	35.1	29.7	424	25.0	21.9	318	19.4	17.3	...	...	...	...	...	...	...
2.76	5.50	15.00	634	14.8	10.8	420	10.4	7.9	315	8.1	6.2	...	14.6	16.7	18.8	20.9	23.4	26.0
2.80	8.50	23.60	626	27.9	23.1	415	19.7	16.8	311	15.3	13.2	...	...	...	...	...	...	...
	11.30	31.50	624	38.9	33.0	414	27.8	24.6	311	21.7	19.4	...	...	...	...	...	...	...
2.82	6.70	18.70	621	20.2	15.9	412	14.2	11.5	309	11.0	9.1	...	...	...	...	16.5	19.1	21.7
2.85	7.50	21.20	614	23.7	19.2	407	16.6	13.9	305	12.9	10.9	...	...	...	...	...	16.0	18.7
	13.20	37.50	613	45.7	38.7	406	33.1	29.5	305	25.9	23.5	...	...	...	...	...	...	...
2.88	4.40	12.50	607	9.8	5.9	402	6.9	4.4	302	5.4	3.5	...	17.8	19.8	21.9	23.9	26.4	28.9
	4.65	13.20	608	11.0	7.0	403	7.7	5.2	302	6.0	4.2	...	16.9	19.0	21.1	23.1	25.6	28.3
2.89	9.75	28.00	605	33.0	27.8	401	23.4	20.4	301	18.1	16.0	...	...	...	...	...	...	...
2.90	4.90	14.00	604	12.1	8.2	401	8.5	6.0	300	6.6	4.8	...	16.0	18.1	20.1	22.2	24.7	27.3
2.91	10.90	31.50	602	37.4	31.7	399	26.7	23.5	299	20.7	18.6	...	...	...	...	...	...	...
2.92	5.20	15.00	599	13.5	9.5	397	9.5	6.9	298	7.4	5.5	...	14.8	16.9	19.0	21.1	23.6	26.2
2.94	5.50	16.00	594	14.8	10.8	394	10.4	7.9	296	8.1	6.2	...	13.6	15.7	17.9	19.9	22.5	25.1
2.97	8.00	23.60	588	25.8	21.2	390	18.2	15.4	293	14.1	12.1	...	...	...	...	...	...	...
3.00	6.30	18.70	583	18.4	14.3	387	12.9	10.3	290	10.0	8.1	...	...	...	14.6	16.7	19.4	22.0
3.01	7.10	21.20	581	21.9	17.6	385	15.4	12.7	289	12.0	10.0	...	...	...	...	...	16.3	19.0
3.02	12.50	37.50	580	43.3	36.7	385	31.2	27.7	288	24.3	22.0	...	...	...	...	...	...	...
3.05	4.40	13.20	574	9.8	5.9	381	6.9	4.4	285	5.4	3.6	...	17.1	19.2	21.2	23.3	25.8	28.3
	4.65	14.00	573	10.9	7.0	380	7.7	5.2	285	6.0	4.2	...	16.2	18.3	20.3	22.4	24.9	27.5
	9.25	28.00	574	31.0	26.0	380	21.9	19.0	285	17.0	14.9	...	...	...	...	...	...	...
3.08	10.30	31.50	568	35.1	29.7	377	25.0	21.9	282	19.4	17.3	...	...	...	...	...	...	...
ARC-LENGTH CORRECTION FACTOR —>												...	.82	.84	.86	.87	.88	.90
3.10	4.90	15.00	564	12.1	8.2	374	8.5	6.0	281	6.6	4.8	...	15.0	17.1	19.2	21.3	23.8	26.4
3.12	5.20	16.00	561	13.5	9.50	372	9.5	6.9	279	7.4	5.5	...	13.8	15.9	18.1	20.1	22.7	25.3
3.13	9.00	28.00	558	30.0	25.0	370	21.2	18.3	278	16.4	14.4	...	...	...	...	...	...	...
3.14	16.00	50.00	558	...	...	370	40.5	36.2	277	31.9	29.1	...	...	...	...	...	...	...
3.18	7.50	23.60	551	23.7	19.2	365	16.6	13.9	274	12.9	10.9	...	...	...	...	...	...	...
3.20	11.80	37.50	547	40.8	34.6	363	29.3	25.9	272	22.8	20.5	...	...	...	...	...	...	...
	6.70	21.20	547	20.2	15.9	363	14.2	11.5	272	11.0	9.1	...	...	...	...	...	16.5	19.2
3.21	5.90	18.70	546	16.6	12.6	362	11.7	9.1	271	9.1	7.2	...	...	...	14.8	17.0	19.6	22.3
3.23	4.40	14.00	541	9.8	5.9	359	6.9	4.4	269	5.4	3.6	...	16.4	18.4	20.5	22.5	25.1	27.6
3.25	9.75	31.50	538	33.0	27.8	356	23.4	20.4	268	18.2	16.1	...	...	...	...	...	...	...
3.27	4.65	15.00	534	10.9	7.0	354	7.7	5.2	266	6.0	4.2	...	15.2	17.3	19.4	21.5	24.0	26.6
3.31	4.90	16.00	528	12.1	8.2	350	8.5	6.0	263	6.6	4.8	...	14.0	16.1	18.2	20.3	22.9	25.5
3.32	8.50	28.00	527	27.9	23.2	349	19.7	16.9	262	15.3	13.2	...	...	...	...	...	...	...
3.34	11.30	37.50	524	39.0	33.0	347	27.8	24.6	260	21.7	19.5	...	...	...	...	...	...	...
3.35	15.00	50.00	523	...	...	346	37.9	33.9	260	29.8	27.2	...	...	...	...	...	.....	...
3.36	7.10	23.60	521	22.0	17.6	346	15.4	12.7	259	12.0	10.0	...	...	...	...	...	...	...
3.40	6.30	21.20	514	18.4	14.3	341	13.0	10.3	256	10.0	8.1	...	...	...	...	...	16.8	19.5
3.43	9.25	31.50	510	31.0	26.0	338	21.9	19.0	254	17.0	14.9	...	...	...	...	...	...	...
3.44	5.50	18.70	508	14.8	10.8	337	10.4	7.9	253	8.1	6.2	...	...	...	15.1	17.2	19.9	22.5
3.46	10.90	37.50	505	37.5	31.7	335	26.7	23.5	251	20.8	18.6	...	...	...	...	...	...	...
ARC-LENGTH CORRECTION FACTOR —>												0.79	0.81	0.83	0.85	0.86	0.87	0.89
3.47	4.40	15.00	505	9.8	5.9	335	6.9	4.4	251	5.4	3.6	...	...	...	19.6	21.6	24.2	26.7
3.49	4.65	16.00	501	10.9	7.0	332	7.7	5.2	249	6.0	4.2	...	...	...	18.4	20.5	23.1	25.7
3.53	8.00	28.00	496	25.8	21.2	328	18.2	15.4	246	14.1	12.1	...	...	...	...	...	...	...
	9.00	31.50	496	30.0	25.0	329	21.2	18.2	246	16.4	14.4	...	...	...	...	...	...	...
3.56	6.70	23.60	491	20.2	16.0	326	14.2	11.5	244	11.0	9.1	...	...	...	...	...	...	...
3.59	14.00	50.00	487	48.4	40.8	323	35.3	31.5	242	27.6	25.1	...	...	...	...	...	...	...
3.64	5.90	21.20	481	16.7	12.6	319	11.7	9.1	239	9.1	7.2	...	...	...	...	...	17.0	19.7
3.65	5.20	18.70	480	13.5	9.5	318	9.5	6.9	238	7.4	5.5	...	...	...	15.2	17.4	20.1	22.7
3.67	10.30	37.50	477	35.5	29.7	316	25.0	21.9	237	19.4	17.3	...	...	...	...	...	...	...
3.70	4.40	16.00	473	9.8	5.9	314	6.93	4.4	235	5.4	3.56	...	...	...	18.6	20.7	23.3	25.8
ARC-LENGTH CORRECTION FACTOR —>												...	...	...	0.81	0.83	0.85	0.87

NOTE: * 5VX = Single and Polyband belts to 200” length
5V = Single and Polyband belts over 200” long

** Stock belt size 5VX530 not shown

NOTE: Selection program VIA-VISA available at www.ptwizard.com.

DODGE®

5VX	D-V Wedge Single Belts to 200” POLYBAND to 200”

5V	D-V Wedge Single Belts over 200” POLYBAND over 200”

STOCK DRIVE SELECTION

Ratio	Belt Number and Approx. Center Distance																								
	5VX 900	5VX 950	5VX 100	5VX 1060	5VX 1120	5VX 1180	5VX 1250	5VX 1320	5VX 1400	5VX 1500	5VX 1600	5VX 1700	5VX 1800	5VX 1900	5VX 2000	5V 2120	5V 2240	5V 2360	5V 2500	5V 2650	5V 2800	5V 3000	5V 3150	5V 3350	5V 3550
2.74	27.3	29.9	32.4	35.4	38.5	41.5	45.0	48.5	52.6	58	63	68	73	78	83	89	95	101	108	115	123	133	140	150	160
	...	...	...	...	24.3	27.5	31.2	34.8	38.9	44	49	54	59	64	69	75	81	87	95	102	110	120	127	137	147
2.76	28.5	31.0	33.6	36.6	39.6	42.6	46.2	49.7	53.7	59	64	69	74	79	84	90	96	102	109	116	124	134	141	151	161
2.80	18.2	20.9	23.6	26.7	29.8	32.9	36.5	40.1	44.1	49	54	59	64	69	74	80	86	92	99	107	115	125	132	142	152
	...	...	...	...	...	...	27.0	30.7	34.9	40	45	50	55	60	66	72	78	84	91	98	106	116	123	134	144
2.82	24.3	26.9	29.4	32.5	35.5	38.6	42.1	45.7	49.7	55	60	65	70	75	80	86	92	98	105	112	120	130	137	147	157
2.85	21.4	24.0	26.6	29.7	32.7	35.8	39.4	42.9	47.0	52	57	62	67	72	77	83	89	95	102	110	117	127	135	145	155
	...	...	...	...	...	...	...	...	...	33	38	44	49	54	59	65	71	77	84	92	99	110	117	127	137
2.88	31.5	34.0	36.5	39.5	42.5	45.5	49.1	52.6	56.6	62	67	72	77	82	87	93	99	105	112	119	127	137	144	154	164
	30.7	33.2	35.7	38.8	41.8	44.8	48.3	51.8	55.8	61	66	71	76	81	86	92	98	104	111	118	126	136	143	153	163
2.89	...	...	...	21.4	24.7	27.9	31.5	35.2	39.3	44	50	55	60	65	70	76	82	88	95	102	110	120	128	138	148
2.90	29.8	32.3	34.9	37.9	40.9	43.9	47.4	51.0	55.0	60	65	70	75	80	85	91	97	103	110	118	125	135	143	153	163
2.91	...	...	...	...	...	...	27.3	31.0	35.2	40	46	51	56	61	66	72	78	84	91	99	106	116	124	134	144
2.92	28.7	31.3	33.8	36.8	39.8	42.9	46.4	49.9	53.9	59	64	69	74	79	84	90	96	102	109	117	124	134	142	152	162
2.94	27.6	30.2	32.7	35.7	38.8	41.8	45.3	48.8	52.9	58	63	68	73	78	83	89	95	101	108	116	123	133	141	151	161
2.97	18.5	21.3	23.9	27.1	30.2	33.3	36.9	40.4	44.5	50	55	60	65	70	75	81	87	93	100	107	115	125	132	142	152
3.00	24.6	27.2	29.7	32.8	35.8	38.9	42.4	46.0	50.0	55	60	65	70	75	80	86	92	98	105	113	120	130	138	148	158
3.01	21.6	24.2	26.8	29.9	33.0	36.1	39.6	43.2	47.2	52	57	62	67	72	77	83	90	96	103	110	118	128	135	145	155
3.02	...	...	...	...	...	...	...	...	27.9	33	39	44	49	54	59	66	72	78	85	92	100	110	118	128	138
3.05	30.9	33.4	35.9	38.9	41.9	45.0	48.5	52.0	56.0	61	66	71	76	81	86	92	98	104	111	119	126	136	144	154	164
	30.0	32.5	35.0	38.1	41.1	44.1	47.6	51.1	55.2	60	65	70	75	80	85	91	97	103	110	118	125	135	143	143	163
	...	...	...	21.7	25.0	28.2	31.9	35.5	39.6	45	50	55	60	65	70	76	82	88	95	103	110	120	128	138	148
3.08	...	...	...	...	...	23.8	27.6	31.4	35.6	41	46	51	56	61	66	72	78	85	92	99	107	117	124	134	144
	.91	**.92**	**.93**	**.94**	**.95**	**.96**	**.98**	**.99**	**1.00**	**1.01**	**1.02**	**1.03**	**1.04**	**1.05**	**1.06**	**1.07**	**1.08**	**1.09**	**1.10**	**1.10**	**1.12**	**1.13**	**1.14**	**1.15**	**1.16**
3.10	28.9	31.5	34.0	37.0	40.1	43.1	46.6	50.1	54.1	59	64	69	74	79	84	90	96	102	109	117	124	134	142	152	162
3.12	27.8	30.4	32.9	36.0	39.0	42.0	45.5	49.1	53.1	58	63	68	73	78	83	89	95	101	108	116	123	133	141	151	161
3.13	...	...	...	21.9	25.2	28.4	32.0	35.7	39.8	45	50	55	60	65	70	76	82	88	95	103	110	121	128	138	148
3.14	...	...	...	...	...	...	...	...	...	...	...	...	...	40	45	51	58	64	71	79	87	97	104	114	125
3.18	18.9	21.6	24.3	27.4	30.5	33.6	37.2	40.8	44.9	50	55	60	65	70	75	81	87	93	100	108	115	125	133	143	153
3.20	21.9	24.5	27.1	30.2	33.3	36.4	...	...	28.4	34	39	44	50	55	60	66	72	78	85	110	100	128	118	128	138
	...	...	...	...	...	...	39.9	43.5	47.5	53	58	63	68	73	78	84	90	96	103	93	118	111	135	145	155
3.21	24.9	27.4	30.0	33.1	36.1	39.2	42.7	46.2	50.3	55	60	65	70	75	80	86	92	98	105	113	121	131	138	148	158
3.23	30.2	32.7	35.2	38.3	41.6	44.3	47.8	51.3	55.3	60	65	70	75	80	85	91	97	103	110	118	125	135	143	153	163
3.25	...	...	...	...	...	24.2	28.0	31.7	36.0	41	46	51	57	62	67	73	79	85	92	100	107	117	125	135	145
3.27	29.1	31.7	34.2	37.2	41.2	43.3	46.8	50.3	54.3	59	64	69	74	79	84	90	96	102	109	117	124	134	142	152	162
3.31	28.0	30.6	33.1	36.2	39.2	42.2	45.7	49.3	53.3	58	63	68	73	78	83	89	95	101	108	116	123	133	141	151	161
3.32	...	...	...	22.2	25.5	28.7	32.4	36.0	40.1	45	50	55	60	66	71	77	83	89	96	103	111	121	128	139	148
3.34	...	...	...	...	...	...	...	...	28.7	34	40	45	50	55	60	66	73	79	86	93	101	111	118	129	139
3.35	...	...	...	...	...	...	...	...	...	...	...	...	...	40	46	52	58	65	72	80	87	97	105	115	125
3.36	19.1	21.8	24.5	27.7	30.8	33.9	37.5	41.1	45.1	50	55	60	65	70	75	81	88	94	101	108	116	126	133	143	153
3.40	22.2	24.8	27.4	30.5	33.6	36.7	40.2	43.8	47.8	53	58	63	68	73	78	84	90	96	103	11	118	128	136	146	156
3.43	...	...	...	...	...	24.5	28.3	32.1	36.3	41	47	52	57	62	67	73	79	85	92	100	107	117	125	135	145
3.44	25.1	27.7	30.3	33.3	36.4	39.5	43.0	46.5	50.6	56	61	66	71	76	81	87	93	99	106	113	121	131	138	148	158
3.46	...	...	...	...	...	...	...	...	28.9	34	40	45	50	55	61	67	73	79	86	94	101	111	119	129	139
	.91	**.92**	**.93**	**.94**	**.95**	**.96**	**.98**	**.99**	**1.00**	**1.01**	**1.02**	**1.03**	**1.04**	**1.05**	**1.06**	**1.07**	**1.08**	**1.09**	**1.10**	**1.10**	**1.12**	**1.13**	**1.14**	**1.15**	**1.16**
3.47	29.3	31.8	34.4	37.4	40.4	43.4	47	50	54	59	64	70	75	80	85	91	97	103	110	...	125	...	142	...	162
3.49	28.2	30.8	33.3	36.3	39.4	42.4	46	49	53	58	63	68	74	79	84	90	96	102	109	...	124	...	141	...	161
3.53	...	...	333	22.5	25.8	29.0	33	36	40	46	51	56	61	66	71	77	83	89	96	...	111	...	129	...	149
	...	...	333	...	...	24.6	28	32	36	42	47	52	57	62	67	73	79	85	92	...	108	...	125	...	145
3.56	19.4	22.1	24.8	27.9	31.1	34.2	38	41	45	50	56	61	66	71	76	82	88	94	110	...	116	...	133	...	153
3.59	...	...	...	...	...	...	...	...	...	...	...	...	35	41	46	53	59	65	72	...	88	...	106	...	126
3.64	22.4	25.1	27.7	30.8	33.9	36.9	40	44	48	53	58	63	68	73	78	84	90	96	103	...	118	...	136	...	156
3.65	25.3	27.9	30.5	33.6	36.6	39.7	43	47	51	56	61	66	71	76	81	87	93	99	106	...	121	...	139	...	159
3.67	...	...	...	...	...	...	...	...	29	35	40	45	51	56	61	67	73	79	86	...	101	...	119	...	139
3.70	28.4	30.9	33.5	36.5	39.6	42.6	46	50	54	59	64	69	74	79	84	90	96	102	109	...	124	...	141	...	161
	.91	**.92**	**.93**	**.94**	**.95**	**.96**	**.98**	**.99**	**1.00**	**1.01**	**1.02**	**1.03**	**1.04**	**1.05**	**1.06**	**1.07**	**1.08**	**1.09**	**1.10**	**1.10**	**1.12**	**1.13**	**1.14**	**1.15**	**1.16**

NOTES: ** Stock belt size 5V2650 & 5V3350 not shown
Arc & Length Factors are approximate values
Refer to Selection Procedure for more precise values

NOTE: Selection program VIA-VISA available at www.ptwizard.com.

SELECTION

DODGE®

5VX	D-V Wedge Single Belts to 200” POLYBAND to 200”

5V	D-V Wedge Single Belts over 200” POLYBAND over 200”

STOCK DRIVE SELECTION

Ratio	Stock Sheaves Diameter		1750 RPM Driver			1160 RPM Driver			870 RPM Driver			Belt Number and Approx. Center Distance**						
			Driven	HP/Belt		Driven	HP/Belt		Driven	HP/Belt		5VX	5VX	5VX	5VX	5VX	5VX	5VX
	Driver	Driven	RPM	5VX	5VX	RPM	5VX	5VX	RPM	5VX	5VX	600	630	670	710	750	800	850
ARC-LENGTH CORRECTION FACTOR —>												...	...	...	0.81	0.83	0.85	0.87
3.74	8.50	31.50	468	27.9	23.2	310	19.7	16.9	233	15.3	13.2	...	...	...	...	...	...	...
3.77	7.50	28.00	464	23.7	19.2	308	16.7	13.9	231	12.9	11.0	...	...	...	...	...	...	...
3.79	6.30	23.60	462	18.4	14.3	306	13.0	10.3	230	10.1	8.1	...	...	...	...	...	...	16.8
3.81	13.20	50.00	459	45.8	38.7	305	33.1	29.5	228	25.9	23.5	...	...	...	...	...	...	...
3.87	4.90	18.70	452	12.1	8.2	299	8.5	6.0	225	6.6	4.8	...	.....	...	15.4	1.76	20.3	22.9
3.88	9.75	37.50	452	33.0	27.8	299	23.4	20.4	224	18.2	16.1	...	...	...	...	...	...	...
3.91	5.50	21.20	448	14.9	10.8	297	10.4	7.9	223	8.1	6.2	...	...	...	...	...	1.73	20.0
3.97	8.00	31.50	440	25.8	21.2	292	18.2	15.4	219	14.1	12.1	...	...	...	...	...	...	...
3.99	7.10	28.00	439	22.0	17.6	291	15.4	12.8	218	12.0	10.0	...	...	...	...	...	...	...
4.02	12.50	50.00	435	43.3	36.7	288	31.2	27.8	216	24.4	22.0	...	...	...	...	...	...	...
ARC-LENGTH CORRECTION FACTOR —>												...	...	...	0.77	0.79	0.81	0.83
4.05	5.90	23.60	432	16.7	12.6	286	11.7	9.1	215	9.1	7.2	...	...	...	...	...	...	17.0
4.09	4.65	18.70	428	10.9	7.1	284	7.7	5.2	213	6.0	4.2	...	...	...	15.6	17.8	20.5	23.1
	9.25	37.50	428	31.0	26.0	284	21.9	19.0	213	17.0	14.9	...	...	...	...	...	...	...
4.14	5.20	21.20	423	13.5	9.5	280	9.5	7.0	210	7.4	5.5	...	...	...	...	...	17.4	20.2
4.20	9.00	37.50	416	30.0	25.1	276	21.2	18.3	207	16.4	14.4	...	...	...	...	...	...	...
4.23	6.70	28.00	414	20.2	16.0	274	14.2	11.6	206	11.0	9.1	...	...	...	...	...	...	...
4.24	7.50	31.50	412	23.7	19.2	273	16.7	13.9	205	12.9	11.0	...	...	...	...	...	...	...
4.26	11.80	50.00	410	40.8	34.6	272	29.3	26.0	204	22.8	20.5	...	...	...	...	...	...	...
4.33	4.40	18.70	405	9.8	5.9	201	6.9	4.4	201	5.4	3.6	...	...	...	15.7	17.9	20.6	23.3
4.35	5.50	23.60	402	14.9	10.8	267	10.4	7.9	200	8.1	6.2	...	...	...	...	...	...	17.3
ARC-LENGTH CORRECTION FACTOR —>												...	...	...	0.76	0.78	0.80	0.83
4.40	4.90	21.20	398	12.1	8.2	264	8.5	6.0	198	6.6	4.8	...	...	...	...	14.8	17.6	20.4
4.45	8.50	37.50	393	27.9	23.2	261	19.7	16.9	196	15.3	13.2	...	...	...	...	...	...	...
4.46	11.30	50.00	393	39.0	33.1	260	27.9	24.6	195	21.7	19.5	...	...	...	...	...	...	...
4.49	7.10	31.50	390	22.0	17.6	259	15.4	12.8	194	12.0	10.0	...	...	...	...	...	...	...
4.50	6.30	28.00	389	18.4	14.3	258	13.0	10.3	193	10.1	8.1	...	...	...	...	...	...	...
4.61	5.20	23.60	380	13.5	9.5	252	9.6	7.0	189	7.4	5.5	...	...	...	...	...	...	17.5
4.62	10.90	50.00	379	37.5	31.8	251	26.7	23.6	188	20.8	18.6	...	...	...	...	...	...	...
4.64	4.65	21.20	377	11.0	7.1	250	7.7	5.2	188	6.0	4.2	...	...	...	...	14.9	17.8	20.5
4.73	8.00	37.50	370	25.8	21.2	245	18.2	15.4	184	14.1	12.1	...	...	...	...	...	...	...
4.76	6.70	31.50	368	20.2	16.0	244	14.2	11.6	183	11.0	9.1	...	...	...	...	...	...	...
ARC-LENGTH CORRECTION FACTOR —>												...	...	...	0.73	0.76	0.78	0.80
4.81	5.90	28.0	364	16.7	12.6	241	11.7	9.1	181	9.1	7.2	...	...	...	...	...	...	...
4.89	10.30	50.0	358	35.2	29.7	237	25.0	21.9	178	19.4	17.3	...	...	...	...	...	...	...
4.90	4.90	23.60	357	12.1	8.2	237	8.5	6.0	178	6.7	4.8	...	...	...	...	...	...	1.77
4.91	4.40	21.20	357	9.8	5.9	236	6.9	4.4	177	5.4	3.6	...	...	...	...	15.1	17.9	20.7
5.05	7.50	37.50	346	23.7	19.2	230	16.7	13.9	172	12.9	11.0	...	...	...	...	...	...	...
5.06	6.30	31.50	346	18.5	14.3	229	13.0	10.3	172	10.0	8.1	...	...	...	...	...	...	...
5.16	4.65	23.6 0	339	11.0	7.1	225	7.74	5.2	169	6.0	4.2	...	...	...	...	...	...	17.8
5.17	5.50	28.00	339	14.5	10.8	225	10.4	7.9	168	8.1	6.2	...	...	...	...	...	...	...
	9.75	50.00	338	33.0	27.8	224	23.4	20.4	168	18.2	16.1	...	...	...	...	..	...	...
5.34	7.10	37.50	328	22.0	17.6	217	15.4	12.8	163	12.0	10.0	...	...	...	...	...	...	...
5.41	5.90	31.5	323	16.7	12.5	214	11.7	9.1	161	9.1	7.2	...	...	...	...	...	...	...
5.45	9.25	50.00	321	31.0	26.0	213	21.9	19.0	160	17.0	15.0		...	...	...	...	...	...
5.47	4.40	23.60	320	9.8	5.9	212	6.9	4.4	159	5.4	3.6	...	...	...	...	...	...	18.0
	5.20	28.00	320	13.5	9.5	212	9.5	7.0	159	7.4	5.5	...	...	...	...	...	...	...
5.61	9.00	50.00	312	29.8	25.1	207	21.2	18.3	155	16.4	14.4	...	...	...	...	...	...	...
ARC-LENGTH CORRECTION FACTOR —>												...	.80	.83	.85	.87	.89	.93

NOTE: * 5VX = Single and Polyband belts to 200” length
5V = Single and Polyband belts over 200” long

** Stock belt size 5VX530 not shown

NOTE: Selection program VIA-VISA available at www.ptwizard.com.

DODGE®

5VX	D-V Wedge Single Belts to 200” POLYBAND to 200”

5V	D-V Wedge Single Belts over 200” POLYBAND over 200”

STOCK DRIVE SELECTION

Ratio	Belt Number and Approx. Center Distance																								
	5VX 900	5VX 950	5VX 100	5VX 1060	5VX 1120	5VX 1180	5VX 1250	5VX 1320	5VX 1400	5VX 1500	5VX 1600	5VX 1700	5VX 1800	5VX 1900	5VX 2000	5V 2120	5V 2240	5V 2360	5V 2500	5V 2650	5V 2800	5V 3000	5V 3150	5V 3350	5V 3550
	.88	**.90**	**.92**	**.93**	**.94**	**.95**	**.97**	**.96**	**.99**	**1.00**	**1.01**	**1.03**	**1.04**	**1.05**	**1.06**	**1.07**	**1.08**	**1.09**	**1.10**	**1.10**	**1.12**	**1.13**	**1.14**	**1.15**	**1.16**
3.74	...	...	...	...	...	24.9	28.8	32.6	36.8	42	47	52	57	63	68	74	80	86	93	100	108	118	126	136	146
3.77	...	...	19.4	22.8	26.1	29.3	33.0	36.7	40.8	46	51	56	61	66	71	77	83	89	97	104	112	122	129	139	149
3.79	19.6	22.4	25.0	28.2	31.3	34.4	38.0	41.6	45.7	51	56	61	66	71	76	82	88	91	101	109	116	126	134	144	154
3.81	...	...	...	...	...	...	...	...	...	...	...	...	36	41	47	53	59	66	73	81	88	99	106	116	126
3.87	25.5	28.1	30.7	33.8	36.8	39.9	43.4	47.0	51.0	56	61	66	71	76	81	87	93	99	106	114	121	131	139	149	159
3.88	...	...	...	...	...	...	...	...	30	35	40	46	51	56	61	67	74	80	87	94	102	112	120	130	140
3.91	22.7	25.3	27.9	31.0	34.1	37.2	40.8	44.3	48.4	53	58	63	69	74	79	85	91	97	104	111	119	129	136	146	156
3.97	...	...	...	...	21.8	25.3	29.1	32.9	37.1	42	47	53	58	63	68	74	80	86	93	101	108	118	126	136	146
3.99	...	...	19.7	23.1	26.4	29.6	33.3	37.0	41.1	46	51	56	61	67	72	78	84	90	97	104	112	122	129	150	150
4.02	...	...	...	...	...	...	...	...	...	...	...	...	36	42	47	54	60	66	73	81	89	99	10	117	127
	.85	**.87**	**.88**	**.90**	**.92**	**.93**	**.95**	**.96**	**.97**	**.99**	**1.00**	**1.01**	**1.03**	**1.04**	**1.05**	**1.06**	**1.07**	**1.08**	**1.09**	**1.10**	**1.11**	**1.12**	**1.13**	**1.14**	**1.15**
4.05	19.9	22.6	25.3	28.5	31.6	34.7	38.3	41.9	46.0	51	56	61	66	71	76	82	88	94	101	109	116	127	134	144	154
4.09	25.7	28.3	30.9	33.9	37.0	40.0	43.6	47.1	51.2	56	61	66	71	76	81	87	93	99	106	114	121	131	139	149	159
	...	..	...	...	...	...	...	...	30.0	35	41	46	51	56	62	68	74	80	87	95	102	112	120	130	140
4.14	22.9	25.5	28.1	31.3	34.3	37.4	41.0	44.6	49	54	59	64	69	74	79	85	91	97	104	111	119	129	136	147	157
4.20	...	...	...	...	...	...	...	25.5	30	36	41	46	51	57	62	68	74	80	87	95	102	113	120	130	140
4.23	...	...	19.9	23.3	26.6	29.9	33.6	37.2	41	46	52	57	62	67	72	78	84	90	97	105	112	122	130	140	150
4.24	...	...	...	...	22.1	25.6	29.4	33.2	37	43	48	53	58	63	68	74	80	86	94	101	109	119	126	136	146
4.26	...	...	...	...	...	...	...	...	...	...	...	...	36	42	48	54	60	67	74	82	89	100	107	117	127
4.33	25.9	28.5	31.0	34.1	37.2	40.2	43.8	47.3	51.4	56	61	66	72	77	81	88	94	100	107	114	122	132	139	149	159
4.35	20.1	22.9	25.6	28.7	31.9	35.0	38.6	42.2	46.3	51	56	61	67	72	77	83	89	95	102	109	117	127	134	144	154
	0.87	**0.89**	**0.91**	**0.92**	**0.93**	**0.94**	**.95**	**.97**	**.98**	**.99**	**1.01**	**1.02**	**1.03**	**1.04**	**1.05**	**1.06**	**1.07**	**1.08**	**1.09**	**1.10**	**1.11**	**1.12**	**1.13**	**1.14**	**1.15**
4.40	23.1	25.7	28.3	31.5	34.6	37.6	41.2	44.8	48.8	54	59	64	69	74	79	85	91	97	104	112	119	129	137	147	157
4.45	...	...	...	...	...	...	...	25.8	30.4	36	41	47	52	57	62	68	74	81	88	95	103	113	120	131	141
4.46	...	...	...	...	...	...	...	...	...	...	,..	...	37	42	48	54	61	67	74	82	90	100	108	118	128
4.49	...	...	...	...	22.4	25.8	29.7	33.5	37.7	43	48	53	58	63	69	75	81	87	94	101	109	119	127	137	147
4.50	...	...	20.2	23.6	26.9	30.1	33.8	37.5	41.7	47	52	57	62	67	72	78	84	90	97	105	113	123	130	140	150
4.61	20.3	23.1	25.7	28.9	32.1	35.2	38.8	42.4	46.5	52	57	62	67	72	77	83	89	95	102	110	117	127	135	145	155
4.62	...	...	...	...	...	...	...	...	...	...	...	...	37	43	48	55	61	67	75	82	90	100	108	118	128
4.64	23.2	25.9	28.5	31.6	34.7	37.8	41.4	44.9	49.0	54	59	64	69	74	79	85	91	97	104	112	119	129	137	147	157
4.73	...	...	...	...	...	...	...	26.1	30.7	36	42	47	52	57	62	69	75	81	88	93	103	113	121	131	141
4.76	...	...	...	...	22.6	26.1	29.9	33.7	38.0	43	48	54	59	64	69	75	81	87	94	102	109	119	127	137	147
	0.83	**0.84**	**0.85**	**0.86**	**0.87**	**0.88**	**0.89**	**0.91**	**0.93**	**0.96**	**0.97**	**0.98**	**1.00**	**1.01**	**1.02**	**1.036**	**10.4**	**1.06**	**1.07**	**1.08**	**1.09**	**1.10**	**1.12**	**1.13**	**1.14**
4.81	...	...	20.4	23.8	27.1	30.4	34.1	37.8	41.9	47	52	57	62	67	73	79	85	91	98	105	113	123	130	140	150
4.89	...	...	...	...	...	...	...	...	...	...	...	...	37	43	49	55	61	68	75	83	90	101	108	119	129
4.90	20.5	23.2	25.9	29.1	32.3	35.4	39.0	42.6	46.7	52	57	62	67	72	77	83	89	95	102	110	117	127	135	145	155
4.91	23.4	26.0	28.7	31.8	34.9	38.0	41.6	45.1	49.2	54	59	64	69	74	79	85	91	97	105	112	120	130	137	147	157
5.05	...	...	...	...	...	...	...	26.4	31.0	37	42	47	52	58	63	69	75	81	88	96	104	114	121	131	141
5.06	...	...	...	...	22.9	26.3	30.2	34.0	38.3	44	49	54	59	64	69	75	81	87	94	102	110	120	127	137	147
5.16	20.6	23.4	26.1	29.3	32.4	35.5	39.2	42.8	46.9	52	57	62	67	72	77	83	89	95	102	110	117	127	135	145	155
5.17	...	...	20.6	24.1	27.4	30.6	34.4	38.0	42.2	47	52	58	63	68	73	79	85	91	98	106	113	123	134	141	151
	...	...	...	...	...	...	...	...	...	...	...	...	38	43	49	55	62	68	75	83	91	101	109	119	129
5.34	...	...	...	...	...	...	...	26.6	31.3	37	42	47	53	58	63	69	75	82	89	96	104	114	121	132	142
5.41	...	...	...	...	23.1	26.6	30.5	34.2	38.5	44	49	54	59	64	69	76	82	88	95	102	110	120	127	138	148
5.45	...	...	...	...	...	...	...	...	...	...	...	...	38	44	49	56	62	68	76	84	91	101	109	119	129
5.47	20.8	23.6	26.3	29.5	32.6	35.7	39.3	42.9	47.0	52	57	62	67	72	77	83	90	96	103	110	118	128	135	145	155
	...	...	20.8	24.3	27.6	30.8	34.5	38.2	42.4	48	53	58	63	68	73	79	85	91	98	106	113	123	131	141	151
5.61	...	...	...	...	...	...	...	...	...	...	...	32	38	44	49	56	62	69	76	84	91	102	109	119	130
	0.80	**0.83**	**0.84**	**0.85**			**.93**	**.94**	**.96**	**.98**	**.99**	**1.00**	**1.02**	**1.03**	**1.04**	**1.05**	**1.06**	**1.07**	**1.08**	**1.06**	**1.11**	**1.09**	**1.13**	**1.12**	**1.15**

NOTES: ** Stock belt size 5V2650 & 5V3350 not shown
Arc & Length Factors are approximate values
Refer to Selection Procedure for more precise values

NOTE: Selection program VIA-VISA available at www.ptwizard.com.

SELECTION

DODGE®

5VX	D-V Wedge Single Belts to 200” POLYBAND to 200”

5V	D-V Wedge Single Belts over 200” POLYBAND over 200”

STOCK DRIVE SELECTION

Ratio	Stock Sheaves Diameter		1750 RPM Driver			1160 RPM Driver			870 RPM Driver			Belt Number and Approx. Center Distance**						
	Driver	Driven	Driven RPM	HP/Belt 5VX	HP/Belt 5VX	Driven RPM	HP/Belt 5VX	HP/Belt 5VX	Driven RPM	HP/Belt 5VX	HP/Belt 5VX	5VX 600	5VX 630	5VX 670	5VX 710	5VX 750	5VX 800	5VX 850
5.67	6.70	37.50	309	20.2	16.0	205	14.2	11.6	153	11.0	9.1	...	...	...	...	...	...	...
5.81	4.90	28.00	301	12.1	8.2	200	8.5	6.0	150	6.7	4.8	...	...	...	...	...	...	...
	5.50	31.50	301	14.9	10.8	199	10.5	7.9	150	8.1	6.2	...	...	...	...	...	...	...
5.94	8.50	50.00	295	27.9	23.2	195	19.7	16.9	146	15.3	13.3	...	...	...	...	...	...	...
6.03	6.30	37.50	290	18.5	14.3	192	13.0	10.3	144	10.1	8.1	...	...	...	...	...	...	...
6.13	4.65	28.00	285	11.0	7.1	189	7.7	5.2	142	6.0	4.2	...	...	...	...	...	...	...
6.16	5.20	31.50	284	13.5	9.5	188	9.5	7.0	141	7.4	5.5	...	...	...	...	...	...	...
6.32	8.00	50.00	277	25.8	21.2	184	18.2	15.4	138	14.1	12.1	...	...	...	...	...	...	...
6.45	5.90	37.50	271	16.7	12.6	180	11.7	9.1	135	9.1	7.2	...	...	...	...	...	...	...
6.49	4.40	28.00	270	9.8	5.9	179	6.9	4.4	134	5.4	3.6	...	...	...				
6.54	4.90	31.50	268	12.1	8.2	177	8.5	6.0	133	6.7	4.8	...	...	...	...	...	...	...
6.74	7.50	50.00	260	23.7	19.3	172	16.7	14.0	129	12.9	11.0	...	...	...	...	...	...	...
6.90	4.65	31.50	254	11.0	7.1	168	7.7	5.2	126	6.0	4.2	...	...	...	...	...	...	...
6.93	5.50	37.50	253	14.9	10.7	167	10.5	7.9	126	8.1	6.2	...	...	...	...	...	...	...
7.13	7.10	50.00	245	22.0	17.6	163	15.4	12.8	122	12.0	10.0	...	...	...	...	...	...	...
ARC-LENGTH CORRECTION FACTOR —>												**...**	**...**	**...**	**...**	**...**	**...**	**...**
7.30	4.40	31.50	240	9.8	5.9	159	6.9	4.4	119	5.4	3.6	...	...	...	...	...	...	...
7.33	5.20	37.50	239	13.5	9.5	158	9.5	7.0	119	7.4	5.5	...	...	...	...	...	...	...
7.56	6.70	50.00	231	20.2	16.0	153	14.2	11.6	115	11.0	9.1	...	...	...	...	...	...	...
7.79	4.90	37.50	225	12.1	8.2	149	8.5	6.0	112	6.7	4.8	...	...	...	...	...	...	...
8.05	6.30	50.00	217	18.5	14.3	144	13.0	10.4	108	10.1	82.0	...	...	...	...	...	...	...
ARC-LENGTH CORRECTION FACTOR —>												**...**	**...**	**...**	**...**	**...**	**...**	**...**
8.22	4.65	37.50	213	11.0	7.1	141	7.7	5.2	106	6.0	4.2	...	...	...	...	...	...	...
8.60	5.90	50.00	203	16.7	12.6	135	11.7	9.1	101	9.1	7.2	...	...	...	...	...	...	...
8.70	440	37.50	201	9.8	5.9	133	6.9	4.4	100	5.4	3.6	...	...	...	...	...	...	...
9.24	5.50	50.00	189	14.9	10.9	126	10.5	7.9	94	8.1	6.2	...	...	...	...	...	...	...
9.78	5.20	50.00	179	13.5	9.5	119	9.5	7.0	89	7.4	5.5	...	...	...	...	...	...	...
10.40	4.90	50.00	168	12.1	8.2	112	8.5	6.0	84	6.7	4.8	...	...	...	...	...	...	...
10.97	4.65	50.00	160	11.0	7.1	106	7.7	5.2	79	6.0	4.2	...	...	...	...	...	...	...
11.60	4.40	50.00	151	9.8	5.9	100	6.9	4.4	75	5.4	3.6	...	...	...	...	...	...	...
ARC-LENGTH CORRECTION FACTOR —>												**...**	**...**	**...**	**...**	**...**	**...**	**...**

NOTE: * 5VX = Single and Polyband belts to 200” length
5V = Single and Polyband belts over 200” long

** Stock belt size 5VX530 not shown

NOTE: Selection program VIA-VISA available at www.ptwizard.com.

DODGE®

5VX	D-V Wedge Single Belts to 200” POLYBAND to 200”

5V	D-V Wedge Single Belts over 200” POLYBAND over 200”

STOCK DRIVE SELECTION

Ratio	Belt Number and Approx. Center Distance																								
	5VX 900	5VX 950	5VX 100	5VX 1060	5VX 1120	5VX 1180	5VX 1250	5VX 1320	5VX 1400	5VX 1500	5VX 1600	5VX 1700	5VX 1800	5VX 1900	5VX 2000	5V 2120	5V 2240	5V 2360	5V 2500	5V 2650	5V 2800	5V 3000	5V 3150	5V 3350	5V 3550
5.67	...	...	...	...	...	...	...	26.9	31.5	37	40	48	53	58	63	70	76	82	89	97	104	114	122	132	142
5.81	...	18.0	21.0	24.4	27.8	31.0	34.7	38.4	42.6	48	53	58	63	68	73	79	85	91	98	106	114	124	131	141	151
	...	...	...	...	23.3	26.8	30.7	34.5	38.8	44	49	54	60	65	70	76	82	88	95	103	110	120	128	138	148
5.94	...	...	...	...	...	...	...	...	...	...	...	32	38	44	50	56	63	69	76	84	92	102	110	120	130
6.03	...	...	...	...	...	...	...	27.1	31.8	37	43	48	53	58	64	70	76	82	89	97	104	115	122	132	142
6.13	...	18.1	21.1	24.6	27.9	31.2	34.9	38.6	42.8	48	53	58	63	68	73	79	86	92	99	106	114	124	131	141	151
6.16	...	...	...	...	23.5	27.0	30.9	34.7	39.0	44	49	55	60	65	70	76	82	88	95	103	110	120	128	138	148
8.32	...	...	...	...	...	...	...	...	...	...	...	33	39	44	50	56	63	69	76.6	84	92	102	110	120	130
6.45	...	...	...	...	...	...	...	27.4	32.0	38	43	48	54	59	64	70	76	82	89	97	105	115	122	132	142
6.49	...	18.3	21.3	24.7	28.1	31.3	35.1	38.8	42.9	48	53	58	63	68	74	80	86	92	99	106	114	124	131	142	152
6.54	...	...	...	20.0	23.7	27.2	31.1	34.9	39.2	44	50	55	60	65	70	76	82	88	95	103	111	121	128	138	148
6.74	...	...	...	...	...	...	...	...	...	...	...	33	39	45	50	57	63	70	77	85	92	103	110	120	131
6.90	...	...	...	20.2	23.8	27.3	31.2	35.1	39.3	45	50	55	60	65	70	76	83	89	96	103	111	121	127	138	149
6.93	...	...	...	...	...	...	...	27.6	32.3	38	43	49	54	59	64	70	71	83	90	97	105	115	123	133	143
7.13	...	...	...	...	...	...	...	...	...	...	...	33	39	45	51	57	64	70	77	85	93	103	111	121	131
	...	**0.75**	**0.77**	**0.81**	**.84**	**0.87**	**0.88**	**0.89**	**0.91**	**0.93**	**0.94**	**0.95**	**0.97**	**0.99**	**1.00**	**4.02**	**1.04**	**1.06**	**10.9**	**1.09**	**1.10**	**1.11**	**1.12**	**1.13**	**1.14**
7.30	...	...	...	20.3	24.0	27.5	31.4	35.2	39.5	45	50	55	60	65	71	77	83	86	96	103	111	121	129	139	149
7.33	...	...	...	...	...	...	...	27.8	32.4	38	43	49	54	59	64	71	77	83	90	98	105	115	123	133	143.1
7.56	...	...	...	...	...	...	...	...	...	...	...	33	39	45	51	57	64	70	77	85	93	103	111	121	131.2
7.79	...	...	...	...	...	...	23.6	28.0	32.6	38	44	49	54	59	65	71	77	83	90	98	105	116	123	133	143.3
8.05	...	...	...	...	...	...	...	...	...	...	...	34	40	45	51	58	64	70	78	86	93	103	111	121	131
	...	**...**	**...**	**0.79**	**0.82**	**0.84**	**0.86**	**0.88**	**0.89**	**0.90**	**0.93**	**0.94**	**0.96**	**0.97**	**0.98**	**1.00**	**1.02**	**1.04**	**10.5**	**10.7**	**10.8**	**1.10**	**1.11**	**1.12**	**1.14**
8.22	...	...	...	...	...	...	23.7	28.1	32.8	38	44	49	54	60	65	71	77	83	90	98	106	116	123	133	143
8.60	...	...	...	...	...	...	...	...	...	...	...	34	40	46	51	59	64	71	78	86	94	104	111	122	132
8.70	...	...	...	...	...	...	23.9	28.3	33.0	39	44	49	55	60	65	71	77	83	91	98	106	116	123	134	144
9.24	...	...	...	...	...	...	...	...	...	...	...	34	40	46	52	58	64	71	78	86	94	104	112	122	132
9.78	...	...	...	...	...	...	...	...	...	...	...	34	40	46	52	58	64	71	78	86	94	104	112	122	132
10.40	...	...	...	...	...	...	...	...	...	...	...	35	41	46	52	59	65	71	79	86	91	104	112	122	132
10.97	...	...	...	...	...	...	...	...	...	...	...	35	41	47	52	59	65	72	79	87	94	105	112	123	133
11.60	...	...	...	...	...	...	...	...	...	...	...	35	41	47	52	59	65	72	79	87	95	101	112	123	133
	...	**...**	**...**	**...**	**...**	**...**	**0.84**	**0.86**	**0.87**	**0.88**	**0.90**	**0.92**	**0.94**	**0.95**	**0.96**	**0.98**	**1.00**	**1.02**	**1.04**	**1.05**	**1.07**	**1.09**	**1.11**	**1.12**	**1.14**

NOTE: Arc & Length Factors are approximate values
Refer to Selection Procedure for more precise values

NOTE: Selection program VIA-VISA available at www.ptwizard.com.

SELECTION

DODGE®

8V D-V Wedge & POLYBAND Belts

STOCK DRIVE SELECTIONS

Ratio	Stock Sheaves Diameter		1750 RPM Driver		1160 RPM Driver		870 RPM Driver		Belt Number and Approx. Center Distance							
	Driver	Driven	Driven RPM	HP Per Belt 8V	Driven RPM	HP Per Belt 8V	Driven RPM	HP Per Belt 8V	8VX 1000	8VX 1060	8VX 1120	8VX 1180	8VX 1250	8VX 1320	8VX 1400	8VX 1500
1.00	12.5	12.5	1750	50.9	1160	42.6	870	35.0	30.4	33.4	36.4	39.4	42.9	46.4	50.4	55.4
	13.2	13.2	1750	56.1	1160	47.3	870	38.9	29.3	32.3	35.3	38.3	41.8	45.3	49.3	54.3
	14.0	14.0	1750	61.7	1160	52.5	870	43.2	28.0	31.0	34.0	37.0	40.5	44.0	48.0	53.0
	15.0	15.0	...	...	1160	58.8	870	48.6	26.4	29.4	32.4	35.4	38.9	42.5	46.5	51.5
	16.0	16.0	...	...	1160	64.8	870	53.8	24.9	27.9	30.9	33.9	37.4	40.9	44.9	49.9
	17.0	17.0	...	...	1160	70.6	870	58.9	23.3	26.3	29.3	32.3	35.8	39.3	43.3	48.3
	18.0	18.0	...	...	1160	76.1	870	63.9	21.7	24.7	27.7	30.7	34.2	37.7	41.7	46.7
	19.0	19.0	...	...	1160	81.2	870	68.7	...	23.2	26.2	29.2	32.7	36.2	40.2	45.2
	20.0	20.0	...	...	1160	86.1	870	73.3	...	...	24.6	27.6	31.1	34.6	38.6	43.6
	21.2	21.2	...	...	1160	91.5	870	78.8	...	...	...	25.7	29.2	32.7	36.7	41.7
	22.4	22.4	...	...	....	....	870	84.0	...	...	...	...	27.3	30.8	34.8	39.8
	24.8	24.8	...	...	....	...	870	93.8	...	...	...	...	...	...	31.0	36.0
1.05	19.0	20.0	...	...	1101	82.5	826	69.6	...	...	25.4	28.4	31.9	...	39.4	44.4
1.06	12.5	13.2	1656	53.0	1098	44.1	823	36.1	29.8	32.8	35.8	38.8	42.3	45.8	49.8	54.8
	13.2	14.0	1649	58.4	1093	48.7	820	40.0	28.6	31.6	34.6	37.6	41.1	44.6	48.6	53.6
	16.0	17.0	...	...	1091	66.3	818	54.9	24.1	27.1	30.1	33.1	36.6	40.1	44.1	49.1
	17.0	18.0	...	...	1095	72.1	821	60.0	22.5	25.5	28.5	31.5	35.0	38.5	42.5	47.5
	18.0	19.0	...	...	1098	77.5	824	65.0	...	23.9	27.0	30.0	33.5	37.0	41.0	46.0
	20.0	21.2	...	...	1094	87.6	820	74.5	...	...	...	26.7	30.2	33.7	37.7	42.7
	21.2	22.4	...	...	1097	93.0	823	79.9	...	...	...	...	28.3	31.8	35.8	40.8
1.07	14.0	15.0	1632	64.2	1082	54.2	811	44.5	27.2	30.2	33.2	36.2	39.7	43.2	47.2	52.2
	15.0	16.0	...	...	1087	60.5	815	49.8	25.7	28.7	31.7	34.7	38.2	41.7	45.7	50.7
1.11	18.0	20.0	...	...	1043	78.5	782	65.7	...	23.1	26.2	39.2	32.7	36.2	40.2	45.2
	22.4	24.8	...	...	...	...	785	85.8	...	...	...	...	...	28.9	32.9	37.9
ARC-LENGTH CORRECTION FACTOR —>									.86	.87	.86	.89	.90	.90	.91	.92
1.12	12.5	14.0	1560	54.8	1034	45.2	775	37.0	29.2	32.2	35.2	38.2	41.7	45.2	49.2	54.2
	17.0	19.0	...	...	1037	73.2	777	60.8	21.7	24.7	27.7	30.7	34.2	37.7	41.7	46.7
	19.0	21.2	...	...	1038	83.8	779	70.6	...	...	24.4	27.4	30.9	34.4	38.4	43.4
	20.0	22.4	...	...	1035	88.7	776	75.3	...	...	...	25.7	29.3	32.7	36.7	41.7
1.13	16.0	18.0	...	...	1030	67.5	772	55.9	23.3	26.3	29.3	32.3	35.8	39.3	43.3	48.3
1.14	13.2	15.0	1537	60.4	1019	50.1	764	41.0	27.8	30.8	33.9	36.9	40.4	43.9	47.9	52.9
	14.0	16.0	1528	66.1	1013	55.4	760	45.4	26.4	29.4	32.4	35.4	38.9	42.4	46.4	51.4
	15.0	17.0	...	...	1022	61.66	766	50.7	24.9	27.9	30.9	33.9	37.4	40.9	44.9	49.9
1.17	21.2	24.8	...	...	990	94.83	743	81.3	...	...	...	...	...	29.8	33.8	38.8
1.18	17.0	20.0	...	...	984	73.98	738	61.4	...	23.9	26.9	29.9	33.4	36.9	40.9	45.9
	18.0	21.2	...	...	983	79.46	737	66.4	...	...	25.2	28.2	31.7	35.2	39.2	44.2
	19.0	22.4	...	...	982	84.65	737	71.3	...	...	...	26.4	30.0	33.5	37.5	42.5
1.19	16.0	19.0	...	...	975	68.33	731	56.4	22.5	25.5	28.5	31.5	35.0	38.5	42.5	47.5
1.20	12.5	15.0	1454	56.4	964	46.20	723	37.7	28.4	31.4	34.4	37.4	40.9	44.4	48.4	53.4
	15.0	18.0	...	...	964	62.40	723	51.3	24.0	27.1	30.1	33.1	36.6	40.1	44.1	49.1
1.21	24.8	30.0	...	...	...	...	718	96.6	...	...	...	...	...	...	...	31.9
1.22	13.2	16.0	1440	61.8	954	51.09	716	41.7	27.0	30.0	33.0	36.1	39.6	43.1	47.1	52.1
	14.0	17.0	1438	67.4	953	56.31	715	46.1	25.6	28.6	31.6	34.6	38.1	41.6	45.6	50.6
1.24	20.0	24.8	...	...	934	90.14	700	76.4	...	...	...	...	27.2	30.7	34.7	39.7
1.25	16.0	20.0	...	...	926	68.92	694	56.9	21.6	24.7	27.7	30.7	34.2	37.7	41.7	46.7
	17.0	21.2	...	...	928	74.68	696	62.0	...	22.9	25.9	28.9	32.4	36.0	40.0	45.0
	18.0	22.4	...	...	930	80.16	698	66.9	...	...	24.2	27.2	30.7	34.2	38.2	43.2
1.27	15.0	19.0	...	...	913	63.04	685	51.8	23.2	26.2	29.2	32.2	35.8	39.3	43.3	48.3
1.28	12.5	16.0	1362	57.5	903	46.92	677	38.2	27.6	30.6	33.6	36.6	40.1	43.6	47.6	52.6
1.29	13.2	17.0	1354	62.8	898	51.68	673	42.2	26.2	29.2	32.2	35.2	38.7	42.3	46.3	51.3
	14.0	18.0	1357	68.3	899	56.89	674	46.5	24.8	27.8	30.8	33.8	37.3	40.8	44.8	49.8
1.31	19.0	24.8	...	...	887	85.80	665	72.1	...	...	...	...	27.9	31.5	35.5	40.5
1.32	17.0	22.4	...	...	878	75.19	658	62.4	...	...	24.9	27.9	31.5	35.0	39.0	44.0
1.33	16.0	21.2	...	...	873	69.49	655	57.3	...	23.7	26.7	29.7	33.2	36.7	40.7	45.7
1.34	15.0	20.0	...	...	867	63.51	650	52.1	22.4	25.4	28.4	31.4	34.9	38.4	42.5	47.5
	22.4	30.0	...	...	...	...	648	87.6	...	...	...	...	...	...	...	33.7
ARC-LENGTH CORRECTION FACTOR —>									.84	.85	.86	.87	.88	.89	.90	.90

NOTE: Arc & Length Factors are approximate values
Refer to Selection Procedure for more precise values

NOTE: Selection program VIA-VISA available at www.ptwizard.com.

DODGE®

8V	D-V Wedge & POLYBAND Belts

STOCK DRIVE SELECTIONS

Ratio	Belt Number and Approx. Center Distance																					
	8VX 1600	8VX 1700	8VX 1800	8VX 1900	8VX 2000	8V 2120	8V 2240	8V 2360	8V 2500	8V 2650	8V 2800	8V 3000	8V 3150	8V 3350	8V 3550	8V 3750	8V 4000	8V 4250	8V 4500	8V 4750	8V 5000	8V 5600
1.00	60.4	65.4	70.4	75.4	80.4	86.4	92.4	98.4	105	113	120	130	138	148	158	168	180	193	205	218	230	260
	59.3	64.3	69.3	74.3	79.3	85.3	91.3	97.3	104	112	119	129	137	147	157	167	179	192	204	217	229	259
	58.0	63.0	68.0	73.0	78.0	84.0	90.0	96.0	103	110	118	128	135	145	155	165	178	190	203	215	228	258
	56.5	61.5	66.5	71.5	76.5	82.5	88.5	94.5	101	109	116	126	134	144	154	164	176	189	201	214	226	256
	54.9	59.9	64.9	69.9	74.9	80.9	86.9	92.9	100	107	115	125	132	142	152	162	175	187	200	212	225	255
	53.3	58.3	63.3	68.3	73.3	79.3	85.3	91.3	98	106	113	123	131	141	151	161	173	186	198	211	223	253
	51.7	56.7	61.7	66.7	71.7	77.7	83.7	89.7	97	104	112	122	129	139	149	159	172	184	197	209	222	252
	50.2	55.2	60.2	65.2	70.2	76.2	82.2	88.2	95	103	110	120	127	138	148	158	170	183	195	208	220	250
	48.6	53.6	56.6	63.6	68.6	74.6	80.6	86.6	94	101	109	119	126	136	146	156	169	181	194	206	219	248
	46.7	51.7	56.7	61.7	66.7	72.7	78.7	84.7	92	99	107	117	124	134	144	154	167	179	192	204	217	247
	44.8	49.8	54.8	59.8	64.8	70.8	76.8	82.8	90	97	105	115	122	132	142	152	165	177	190	202	215	245
	41.0	46.0	51.0	56.0	61.0	67.0	73.0	79.0	86	93	101	111	118	128	138	148	161	173	186	198	211	241
1.05	49.4	54.4	59.4	64.4	69.4	75.4	81.4	87.4	94	102	109	119	127	137	147	1570	169	182	194	267	219	249
1.06	59.8	64.8	69.8	74.8	79.8	85.8	91.8	97.8	105	112	120	130	137	147	157	167	180	192	205	217	230	26
	58.6	63.6	68.6	73.6	78.6	84.6	90.6	96.6	104	111	119	129	136	146	156	166	179	191	204	216	229	259
	54.1	59.1	64.1	69.1	74.1	80.1	86.1	92.1	99	107	114	124	132	142	152	162	174	187	199	212	224	254
	52.5	57.5	62.5	67.5	72.5	78.5	84.5	90.5	97	105	112	122	130	140	150	160	172	185	197	210	222	252
	51.0	56.0	61.0	66.0	71.0	77.0	83.0	89.0	96	103	111	121	128	138	148	158	171	183	196	208	221	251
	47.7	52.7	57.7	62.7	67.7	73.7	79.7	85.7	93	100	108	118	125	135	145	155	168	180	193	206	218	248
	45.8	50.8	55.8	60.8	65.8	71.8	77.8	83.8	91	98	106	116	123	133	143	153	166	178	191	203	216	246
1.07	57.2	62.2	67.2	72.2	77.2	83.2	89.2	95.2	102	110	117	127	134	145	155	165	177	190	202	215	227	257
	55.2	60.7	65.7	70.7	75.7	81.7	87.7	93.7	101	108	116	126	133	143	153	163	176	188	201	213	226	256
1.11	50.2	55.2	60.2	65.2	70.2	76.2	82.2	86.2	95	103	110	120	128	138	148	158	170	183	195	208	220	250
	42.9	47.9	52.9	57.9	62.9	68.9	74.9	80.9	88	95	103	113	120	130	140	150	163	175	188	200	213	243
	.93	.94	.95	.96	.97	.97	.98	.99	1.00	1.01	1.02	1.03	1.03	1.04	1.05	1.06	1.07	1.08	1.09	1.09	1.10	1.12
1.12	59.2	64.2	69.2	74.2	79.2	85.2	91.2	97.2	104	112	119	129	137	147	157	167	179	192	204	217	229	259
	51.7	56.7	61.7	66.7	71.7	77.7	83.7	89.7	97	104	112	122	129	139	149	159	172	184	197	209	222	252
	48.4	53.4	58.4	63.4	68.4	74.4	80.4	86.4	93	101	108	118	126	136	146	156	168	181	193	206	218	248
	46.7	51.7	56.7	61.7	66.7	72.7	78.7	84.7	92	99	107	117	124	134	144	154	167	179	191	204	217	247
1.13	53.3	58.3	63.3	68.3	73.3	79.3	85.3	91.3	98	106	113	123	131	141	151	161	173	186	198	211	223	253
1.14	57.9	62.9	67.9	72.9	77.9	83.9	89.9	95.9	103	110	118	128	135	145	155	165	118	190	203	215	228	258
	56.4	61.4	66.4	71.4	76.4	82.4	88.4	94.4	101	109	116	126	134	144	154	164	17	189	201	214	226	256
	54.9	59.9	64.9	69.9	74.9	80.9	86.9	92.9	100	107	115	125	132	142	152	162	175	187	200	212	225	255
1.17	43.8	48.8	53.8	58.8	63.8	69.8	75.9	81.9	89	96	104	114	121	131	141	151	164	176	189	201	214	244
1.18	50.9	55.9	60.9	65.9	70.9	76.9	82.9	88.9	96	103	111	121	128	138	148	158	171	183	196	208	221	251
	49.2	54.2	59.2	64.2	69.2	75.2	81.2	87.2	94	102	109	119	127	137	147	157	169	182	194	207	219	249
	47.5	52.5	57.5	62.5	67.5	73.5	79.5	85.5	92	100	107	117	125	135	145	155	167	180	192	205	217	247
1.19	52.5	57.5	62.5	67.5	72.5	78.5	84.5	90.5	97	105	112	122	130	140	150	160	172	185	197	210	222	252
1.20	58.4	63.4	68.4	73.4	78.4	84.4	90.4	96.4	103	111	118	128	136	146	156	166	178	191	203	216	228	258
	54.1	59.1	64.1	69.1	74.1	80.1	86.1	92.1	99	107	114	124	132	142	152	162	174	187	199	212	224	254
1.21	36.9	41.9	46.9	51.9	56.9	62.9	68.9	74.9	82	89	97	107	114	124	134	144	157	169	182	194.	207	237
1.22	57.1	62.1	67.1	72.1	77.1	83.1	89.1	95.1	102	110	117	127	135	145	155	165	177	190	202	215	227	257
	55.6	60.6	65.6	70.6	75.7	81.7	87.7	93.7	101	108	116	126	133	143	153	163	176	186	201	213	226	256
1.24	44.8	49.8	54.8	59.8	64.8	70.8	76.8	82.8	90	97	105	115	122	132	142	152	165	177	190	202	215	244
1.25	51.7	56.7	61.7	66.7	71.7	77.7	83.7	89.7	97	104	112	122	129	139	149	159	172	184	197	209	222	252
	50.0	55.0	60.0	65.0	70.0	76.0	82.0	88.0	95	102	110	120	127	137	147	157	170	182	195	207	220	250
	48.2	53.2	58.2	63.2	68.3	74.3	80.3	86.3	93	101	108	118	126	136	146	156	168	181	193	206	218	248
1.27	53.3	58.3	63.3	68.3	73.3	79.3	85.3	91.3	98	106	113	123	131	141	151	161	173	186	198	212	223	253
1.28	57.6	62.6	67.6	72.6	77.6	83.6	89.6	95.6	103	110	118	128	135	145	155	165	178	190	203	21	228	258
1.29	56.3	61.3	66.3	71.3	76.3	82.3	88.3	94.3	101	109	116	126	134	144	154	164	176	189	201	214	226	256
	54.8	59.8	64.8	69.9	74.9	80.9	86.9	92.9	100	107	115	125	132	142	152	162	175	187	200	212	225	255
1.31	45.5	50.5	55.5	60.5	65.5	71.5	77.5	83.5	91	98	106	116	123	133	143	153	166	178	191	203	216	245
1.32	49.0	54.0	59.0	64.0	69.0	75.0	81.0	87.0	94	101	109	119	126	135	146	156	169	182	194	207	219	249
1.33	50.7	55.7	60.7	65.7	70.8	76.8	82.8	88.8	96	103	111	121	128	138	148	158	171	183	196	208	221	251
1.34	52.5	57.5	62.5	67.5	72.5	78.5	84.5	90.5	97	105	112	122	130	140	150	160	172	185	197	210	222	252
	38.7	43.7	48.7	53.7	58.7	64.8	70.8	76.8	84	91	99	109	116	126	136	146	159	171	184	196	209	239
	.92	.93	.94	.95	.96	.97	.98	.98	.99	1.00	1.01	1.02	1.03	1.04	1.05	1.06	1.06	1.07	1.08	1.09	1.10	1.11

NOTE: Selection program VIA-VISA available at www.ptwizard.com.

SELECTION

DODGE®

8V D-V Wedge & POLYBAND Belts

STOCK DRIVE SELECTIONS

Ratio	Stock Sheaves Outside Diameter Driver	Stock Sheaves Outside Diameter Driven	1750 RPM Driver Driven RPM	1750 RPM Driver HP Per Belt 8V	1160 RPM Driver Driven RPM	1160 RPM Driver HP Per Belt 8V	870 RPM Driver Driven RPM	870 RPM Driver HP Per Belt 8V	Belt Number and Approx. Center Distance 8VX 1000	8VX 1060	8VX 1120	8VX 1180	8VX 1250	8VX 1320	8VX 1400	8VX 1500
1.36	14.0	19.0	1285	69.0	851	57.3	639	46.9	24.0	27.0	30.0	33.0	36.5	40.0	44.0	49.0
1.37	12.5	17.0	1281	58.3	849	47.5	637	38.7	26.7	29.8	32.8	35.8	39.3	42.8	46.8	51.8
	13.2	18.0	1278	63.5	847	52.2	635	42.5	25.4	28.4	31.4	34.4	37.9	41.4	45.4	50.5
1.38	18.0	24.8	...	...	839	81.0	630	67.6	...	...	..	25.2	28.7	32.2	36.2	41.2
1.41	16.0	22.4	...	...	826	69.9	619	57.6	...	...	25.7	28.7	32.2	35.7	39.7	44.7
1.42	15.0	21.2	...	...	818	63.9	613	52.4	...	24.4	27.4	30.4	33.9	37.5	41.5	46.5
	21.2	30.0	...	...	817	96.7	613	82.7	...	...	...	...	...	...	29.5	34.5
1.43	14.0	20.0	1220	69.5	808	57.7	606	47.1	23.1	26.1	29.2	32.2	35.7	39.2	43.2	48.2
	24.8	35.5	...	...	...	...	606	97.6	...	...	...	...	...	...	...	...
1.45	12.5	18.0	1209	58.8	802	47.8	601	38.9	25.9	28.9	31.9	34.9	38.5	42.0	46.0	51.0
	13.2	19.0	1210	64.0	802	52.5	602	42.8	24.6	27.6	30.6	33.6	37.1	40.6	44.6	49.6
1.46	17.0	24.8	...	...	792	75.9	594	62.9	...	...	...	25.9	29.4	32.9	37.0	42.0
1.50	15.0	22.4	...	...	773	64.2	580	52.6	...	23.3	26.4	29.4	32.9	36.5	40.5	45.5
1.51	20.0	30.0	...	...	771	91.5	578	77.5	...	...	...	...	...	...	30.3	35.4
1.52	13.2	20.0	1149	64.4	762	52.7	571	43.0	23.7	26.7	29.7	32.8	36.3	39.8	43.8	48.8
	14.0	21.2	1150	69.9	762	57.9	572	47.3	22.1	25.1	28.1	31.2	34.7	38.2	42.2	47.2
1.53	12.5	19.0	1145	59.2	759	48.2	569	39.1	25.1	28.1	31.1	34.1	37.6	41.1	45.2	50.2
1.56	16.0	24.8	...	...	745	70.4	559	58.0	...	...	...	26.6	30.1	33.7	37.7	42.7
1.59	19.0	30.0	...	...	732	86.9	549	72.9	...	...	...	...	...	...	31.0	36.1
	22.4	35.5	...	...	...	...	547	88.3	...	...	...	...	...	...	...	...
1.61	12.5	20.0	1087	59.5	721	48.3	540	39.3	24.2	27.2	30.3	33.3	36.8	40.3	44.3	49.3
	14.0	22.4	1088	70.2	721	58.2	541	47.5	...	24.1	27.1	30.1	33.7	37.2	41.2	46.2
1.62	13.2	21.2	1083	64.7	718	53.0	539	43.2	22.6	25.7	28.7	31.7	35.3	38.8	42.8	47.8
	24.8	40.0	...	...	...	...	538	98.0	...	...	...	...	...	...	...	...
1.66	15.0	24.8	...	...	698	64.6	523	52.9	...	...	24.2	27.3	30.9	34.4	38.4	43.5
ARC-LENGTH CORRECTION FACTOR —>									**.83**	**.84**	**.85**	**.86**	**.87**	**.88**	**.89**	**.91**
1.67	18.0	30.0	...	...	693	81.9	520	68.2	...	...	...	...	...	27.7	31.7	36.8
1.68	21.2	35.5	...	...	690	97.4	518	83.2	...	...	...	...	...	...	...	...
1.71	12.5	21.2	1025	59.7	679	48.4	510	39.4	23.1	26.2	29.2	32.3	35.8	39.3	43.3	48.3
	13.2	22.4	1025	65.0	679	53.1	509	43.3	21.6	24.6	27.7	30.7	34.2	37.8	41.8	46.8
1.77	17.0	30.0	...	...	654	76.5	490	63.4	...	...	...	...	...	28.4	32.5	37.5
1.78	14.0	24.8	982	70.6	651	58.4	488	47.7	...	...	24.9	28.0	31.6	35.1	39.2	44.2
	20.0	35.5	...	...	651	92.1	488	77.9	...	...	...	...	...	...	...	...
1.79	22.4	40.0	...	...	...	...	485	88.5	...	...	...	...	...	...	...	...
1.80	12.5	22.4	970	59.9	643	48.6	482	39.5	22.0	25.1	28.2	31.2	34.7	38.3	42.3	47.3
	24.8	44.5	...	...	...	...	483	98.3	...	...	...	...	...	...	...	...
1.88	19.0	35.5	...	...	618	87.3	463	73.2	...	...	...	...	...	...	...	31.1
1.89	13.2	24.8	925	65.3	613	53.3	460	43.4	...	...	25.5	28.6	32.1	35.7	39.7	44.8
	16.0	30.0	...	...	615	70.9	461	58.4	...	...	...	...	...	29.0	33.1	38.2
1.90	21.2	40.0	...	...	612	97.6	459	83.4	...	...	...	...	...	...	...	...
1.98	18.0	35.5	...	...	585	82.2	439	68.5	...	...	...	...	...	...	...	31.8
2.00	12.5	24.8	875	60.2	580	48.7	435	39.6	...	22.9	26.0	29.1	32.6	36.2	40.2	45.3
	22.4	44.5	...	...	...	...	436	88.7	...	...	...	...	...	...	...	...
2.01	15.0	30.0	...	...	576	64.9	432	53.2	...	...	...	...	26.1	29.7	33.8	38.9
	20.0	40.0	...	...	577	92.3	433	78.0	...	...	...	...	...	...	...	...
2.10	17.0	35.5	...	...	552	76.8	414	63.6	...	...	...	...	...	...	...	32.4
2.11	21.2	44.5	...	...	550	97.8	412	83.5	...	...	...	...	...	...	...	...
2.12	19.0	40.0	...	...	548	87.5	411	73.4	...	...	...	...	...	...	...	...
2.15	24.8	53.0	...	...	...	...	405	98.5	...	...	...	...	...	...	...	...
2.16	14.0	30.0	810	71.1	537	58.7	403	47.9	...	...	...	...	26.7	30.4	34.5	39.6
2.23	16.0	35.5	...	...	519	71.1	389	58.5	...	...	...	...	...	...	...	33.1
2.24	18.0	40.0	...	...	519	82.3	389	68.6	...	...	...	...	...	...	...	...
	20.0	44.5	...	...	518	92.4	389	78.1	...	...	...	...	...	...	...	...
2.29	13.2	30.0	763	65.6	506	53.6	380	43.6	...	...	...	...	27.3	30.9	35.1	40.2
2.36	19.0	44.5	...	...	492	87.6	369	73.4	...	...	...	...	...	...	...	...
2.37	17.0	40.9	...	...	490	76.9	367	63.6	...	...	...	...	...	...	...	...
ARC-LENGTH CORRECTION FACTOR —>									**.80**	**.80**	**.81**	**.81**	**.82**	**.83**	**.85**	**.87**

NOTE: Arc & Length Factors are approximate values
Refer to Selection Procedure for more precise values

NOTE: Selection program VIA-VISA available at www.ptwizard.com.

DODGE®

8V	D-V Wedge & POLYBAND Belts

STOCK DRIVE SELECTIONS

Speed Ratio	Belt Number and Approx. Center Distance																					
	8VX	8VX	8VX	8VX	8VX	8V	8V	8V	8V	8V	8V	8V	8V	8V	8V	8V	8V	8V	8V	8V	8V	8V
	160	1700	1800	1900	2000	2120	2240	2360	2500	2650	2800	3000	3150	3350	3550	3750	4000	4250	4500	4750	5000	5600
1.36	54.0	59.0	64.0	69.0	74.1	80.1	86.1	92.1	99	107	114	124	132	142	152	162	174	187	199	212	224	254
1.37	56.8	61.8	66.8	71.8	76.8	82.8	88.8	94.8	102	109	117	127	134	144	154	164	177	189	202	214	227	257
	55.5	60.5	65.5	70.5	75.5	81.5	87.5	93.5	101	108	115	125	133	143	153	163	175	186	200	213	225	255
1.38	46.3	51.3	56.3	61.3	66.3	72.3	78.3	84.3	91	99	106	116	124	134	144	154	166	179	191	204	216	246
1.41	49.8	54.8	59.8	64.8	69.8	75.8	81.8	87.8	95	102	110	120	127	137	147	157	170	182	195	207	220	250
1.42	51.5	56.5	61.5	66.5	71.5	77.5	83.5	89.5	97	104	111	121	129	139	149	159	172	184	197	209	222	252
	39.6	44.6	49.6	54.6	59.6	65.7	71.7	77.7	85	92	100	110	117	127	137	147	160	172	185	197	210	240
1.43	53.2	58.2	63.2	68.2	73.2	79.3	85.3	91.3	98	106	113	123	131	141	151	161	173	186	198	211	223	253
	...	37.3	42.3	47.3	52.4	58.4	64.4	70.4	77	85	92	102	110	120	130	140	152	165	178	190	203	233
1.45	56.0	61.0	66.0	71.0	76.0	82.0	88.0	94.0	101	108	116	126	133	143	153	163	176	188	201	213	226	256
	54.6	59.7	64.7	69.7	74.7	80.7	86.7	92.7	100	107	115	125	132	142	152	162	175	187	200	212	225	255
1.46	47.0	52.0	57.0	62.0	67.1	73.1	79.1	85.1	92	100	107	117	125	135	145	155	167	180	192	205	217	247
1.50	50.5	55.5	60.5	65.5	70.5	76.6	82.6	88.6	96	103	111	121	128	138	148	158	171	183	196	208	221	251
1.51	40.4	45.5	50.5	55.5	60.5	66.6	72.6	78.6	86	93	101	111	118	128	138	148	161	173	186	198	211	241
1.52	53.8	58.8	63.8	68.9	73.9	79.9	85.9	91.9	99	106	114	124	131	141	151	161	174	186	199	211	224	254
	52.2	57.3	62.3	67.3	72.3	78.3	84.3	90.3	97	105	112	122	130	140	150	160	172	185	197	210	222	252
1.53	55.2	60.2	65.2	70.2	75.2	81.2	87.2	93.2	100	108	115	125	133	143	153	163	175	188	200	213	225	255
1.56	47.8	52.8	57.8	62.8	67.8	73.8	79.8	85.8	93	100	108	118	125	135	145	155	168	180	193	205	218	248
1.59	41.1	46.2	51.2	56.2	61.3	67.3	73.3	79.3	86	94	101	111	119	129	139	149	161	174	186	199	211	241
	33.9	39.0	44.0	49.1	54.1	60.2	66.2	72.2	79	87	94	104	111	122	132	142	154	167	179	192	204	234
1.61	54.4	59.4	64.4	69.4	74.4	80.4	86.4	92.4	99	107	114	124	131	142	151	162	174	187	199	212	224	254
	51.3	56.3	61.3	66.3	71.3	77.3	83.3	89.3	96	104	111	121	129	139	149	159	171	184	196	209	221	251
1.62	52.8	57.9	62.9	67.9	72.9	78.9	84.9	90.9	98	105	113	123	130	140	150	160	173	185	198	210	223	253
	...	...	36.4	43.8	48.5	54.6	60.6	66.7	74	81	89	99	106	116	126	136	149	161	174	186	199	229
1.66	48.5	53.5	58.4	63.6	68.6	74.6	80.6	86.6	94	101	109	1119	126	136	146	156	169	181	194	206	219	249
	.92	.93	.94	.95	.95	.96	.97	.98	.99	1.00	1.01	1.02	1.03	1.04	1.04	1.05	1.06	1.07	1.08	1.09	1.10	1.11
1.67	41.9	46.9	52.0	57.0	62.0	68.0	74.1	80.1	87	95	102	112	120	130	140	150	162	175	187	200	212	242
1.68	34.7	39.8	44.9	50.0	55.0	61.0	67.1	73.1	80	88	95	105	113	123	133	143	155	168	180	193	205	235
1.71	...	58.4	63.4	68.4	73.4	79.4	85.4	91.4	98	106	113	123	131	141	151	161	173	186	198	211	223	253
	51.8	56.9	61.9	66.9	71.9	77.9	83.9	89.9	97	104	112	122	129	139	149	159	172	184	197	209	222	252
1.77	42.6	47.7	52.7	57.7	62.8	68.8	74.8	80.8	88	95	103	113	120	130	140	150	163	175	188	200	213	243
1.78	49.2	54.3	59.3	64.3	69.3	75.3	81.3	87.4	94	102	109	119	127	137	147	157	169	182	194	207	219	249
	35.6	40.7	45.8	50.8	55.9	61.9	68.0	74.0	81	89	96	106	114	124	134	144	156	169	181	194	206	236
1.79	...	34.9	40.0	45.1	50.2	56.3	62.4	68.4	76	83	91	101	108	118	128	138	151	163	176	186	201	231
1.80	52.4	57.4	62.4	67.4	72.4	78.4	84.4	90.5	97	105	112	122	130	140	150	160	172	185	197	210	225	252
	...	...	...	39.3	44.5	50.6	56.7	62.8	70	77	85	95	103	113	123	133	145	158	170	183	195	225
1.88	36.3	41.4	46.5	51.5	56.6	62.7	68.7	74.7	82	89	97	107	114	124	134	144	157	169	182	194	207	237
1.89	49.8	54.8	59.9	64.9	69.9	75.9	81.9	88.0	95	102	110	120	127	137	147	157	170	183	195	208	220	250
	43.3	48.4	53.4	58.5	63.5	69.5	75.5	81.6	89	96	104	114	121	131	141	151	164	176	189	201	214	244
1.90	...	35.7	40.9	46.0	51.1	57.2	63.2	69.3	76	84	91	101	109	119	129	139	152	164	177	189	202	232
1.98	36.9	42.1	47.2	52.2	57.3	63.4	69.4	75.5	82	90	98	108	115	125	135	145	158	170	183	195	208	238
2.00	50.3	55.4	60.4	65.4	70.4	76.5	82.5	88.5	95	103	111	120	128	138	148	158	171	183	196	208	221	251
	...	...	...	41.0	46.1	52.3	58.4	64.5	72	79	87	97	104	114	124	134	147	160	172	185	197	227
2.01	44.0	49.1	54.1	59.2	64.2	70.3	76.3	82.3	89	97	104	114	122	132	142	152	164	177	189	202	214	244
	...	36.5	41.7	46.8	51.9	58.0	64.1	70.2	77	85	92	102	110	120	130	140	152	165	178	190	203	233
2.10	37.6	42.8	47.9	53.0	58.0	64.1	70.2	76.2	83	91	98	108	116	126	136	146	158	171	183	196	209	237
2.11	...	...	36.5	41.8	47.0	53.1	59.3	65.4	72	80	88	98	105	115	125	135	148	160	173	185	198	228
2.12	...	37.2	42.4	47.5	52.6	58.7	64.8	70.9	78	85	93	103	111	121	131	141	153	166	178	191	203	233
2.15	...	...	...	...	...	42.6	48.9	55.1	62	70	78	88	95	105	115	126	138	151	163	176	188	218
2.16	44.7	44.8	54.9	59.9	64.9	71.0	77.0	83.1	90	98	105	115	123	133	143	153	165	178	190	203	215	245
2.23	38.3	43.5	48.6	53.7	58.7	64.8	70.9	76.9	84	91	99	109	117	127	137	147	159	172	184	197	209	239
2.24	...	37.8	43.0	48.2	53.3	59.4	65.5	71.6	79	86	94	104	111	121	131	141	154	167	179	192	204	234
	...	...	37.3	42.6	47.8	54.0	60.1	66.2	73	81	89	99	106	116	126	136	149	161	174	186	199	229
2.29	45.3	50.4	55.4	60.5	65.5	71.6	77.6	83.6	91	98	106	116	123	133	143	153	166	178	191	203	216	246
2.36	...	...	38.0	43.2	48.4	54.6	60.8	66.9	74	82	89	99	107	117	127	137	150	162	175	187	120	230
2.37	33.2	38.5	43.7	48.9	54.0	60.1	66.2	72.3	79	87	95	105	112	122	132	142	155	167	180	192	205	235
	.89	.90	.91	.92	.93	.94	.96	.96	.98	.99	1.00	1.01	1.02	1.03	1.04	1.04	1.05	1.06	1.07	1.08	1.09	1.11

NOTE: Selection program VIA-VISA available at www.ptwizard.com.

SELECTION

DODGE®

8V D-V Wedge & POLYBAND Belts

STOCK DRIVE SELECTIONS

Speed Ratio	Stock Sheaves (4, 5, 6, 8, 10, 12 Grooves) Outside Diameter		1750 RPM Driver		1160 RPM Driver		870 RPM Driver		Belt Number and Approx. Center Distance							
	Driver	Driven	Driven RPM	HP Per Belt 8V	Driven RPM	HP Per Belt 8V	Driven RPM	HP Per Belt 8V	8VX 1250	8VX 1320	8VX 1400	8VX 1500	8VX 1600	8VX 1700	8VX 1800	8VX 1900
2.38	**22.4**	53.0	...	...	...	...	366	88.8	...	...	...	...	...	...	...	...
2.39	**15.0**	35. 5	...	...	486	65.1	365	53.	...	...	...	33.8	39.0	44.1	49.3	54.4
2.42	**12.5**	30.0	722	60.5	479	48.9	359	39.8	27.7	31.4	35.5	40.7	45.8	50.9	55.9	61.0
2.49	**18.0**	44.5	...	...	466	82.4	350	68.6	...	...	...	...	...	...	38.6	43.9
2.51	**21.2**	53.0	...	...	461	97.9	346	83.6	...	...	...	...	...	...	...	...
2.52	**16.0**	40.0	...	...	461	71.2	345	58.6	...	...	...	...	33.9	39.2	44.4	49.6
2.55	**24.8**	63.0	...	...	...	...	341	98.6	...	...	...	...	...	...	...	...
2.56	**14.0**	35.5	684	71.3	453	58.9	340	48.0	...	...	29.1	34.4	39.7	44.8	50.0	55.1
2.64	**17.0**	44.5	...	...	440	77.0	330	63.7	...	...	...	...	...	...	39.3	44.6
2.67	**20.0**	53.0	...	...	435	92.5	326	78.2	...	...	...	...	...	...	...	...
2.69	**15.0**	40.0	...	...	431	65.2	324	53.4	...	...	...	...	34.5	39.8	45.1	50.2
2.72	**13.2**	35.5	644	65.	427	53.7	320	43.7	...	...	29.7	35.0	40.2	45.4	50.5	55.6
2.80	**16.0**	44.5	...	...	414	71.	310	58.6	...	...	...	...	...	34.5	39.9	45.2
2.81	**19.0**	53.0	...	...	413	87.7	310	73.5	...	...	...	...	...	...	...	...
2.83	**22.4**	63.0	...	...	...	...	308	88.9	...	...	...	...	...	...	...	...
2.87	**12.5**	35.5	610	60.	404	49.	303	39.8	...	...	30.1	35.4	40.7	45.9	51.0	56.1
2.88	**14.0**	40.0	607	71.4	402	58.	302	48.1	...	...	...	...	35.2	40.5	45.7	50.9
	24.8	71.0	...	...	...	...	302	98.6	...	...	...	...	...	...	...	...
2.97	**18.0**	53.0	...	...	391	82.	293	68.7	...	...	...	...	...	...	...	...
2.99	**15.0**	44.5	...	...	388	65.2	291	53.4	...	...	...	...	...	35.2	40.6	45.9
ARC-LENGTH CORRECTION FACTOR —>									**.80**	**.81**	**.82**	**.83**	**.86**	**.87**	**.88**	**.90**
2.99	**21.2**	63.0	...	...	388	98.0	291	83.7	...	...	...	...	...	...	...	...
3.06	**13.2**	40.0	572	65.9	379	53.7	284	43.7	...	...	...	30.2	35.7	41.0	46.3	51.5
3.14	**17.0**	53.0	...	...	369	77.0	277	63.7	...	...	...	...	...	...	...	...
3.17	**20.0**	63.0	...	...	366	92.6	274	78.2	...	...	...	...	...	...	...	...
3.19	**22.4**	71.0	...	...	...	...	273	88.9	...	...	...	...	...	...	...	...
3.21	**14.0**	44.5	545	71.4	361	58.9	271	48.1	...	...	...	...	...	35.8	41.2	46.6
3.24	**12.5**	40.0	541	60.7	358	49.0	269	39.9	...	...	...	30.7	36.2	41.5	46.7	51.9
3.34	**16.0**	53.0	...	...	347	71.3	260	58.7	...	...	...	...	...	...	...	...
	19.0	63.0	...	...	347	87.7	260	73.6	...	...	...	...	...	...	...	...
3.37	**21.2**	71.0	...	...	344	98.0	258	83.7	...	...	...	...	...	...	...	...
ARC-LENGTH CORRECTION FACTOR —>									**...**	**...**	**...**	**.78**	**.82**	**.85**	**.87**	**.88**
3.41	**13.2**	44.5	514	65.9	340	53.8	255	43.7	...	...	...	...	...	36.3	41.7	47.1
3.53	**18.0**	63.0	...	...	329	82.6	247	68.7	...	...	...	...	...	...	...	...
3.57	**15.0**	53.0	...	...	325	65.3	244	53.5	...	...	...	...	...	...	...	...
3.58	**20.0**	71.0	...	...	324	92.6	243	78.3	...	...	...	...	...	...	...	...
3.60	**12.5**	44.5	486	60.7	322	49.1	242	39.9	...	...	...	...	...	36.7	42.2	47.5
ARC-LENGTH CORRECTION FACTOR —>									**...**	**...**	**...**	**...**	**...**	**.81**	**.84**	**.88**
3.74	**17.0**	63.0	...	...	310	77.1	233	63.8	...	...	...	...	...	...	...	...
3.77	**19.0**	71.0	...	...	308	87.8	231	73.6	...	...	...	...	...	...	...	...
3.83	**14.0**	53.0	457	71.5	303	59.0	227	48.1	...	...	...	...	...	...	...	37.3
3.97	**16.0**	63.0	...	...	292	71.3	219	58.7	...	...	...	...	...	...	...	...
3.98	**18.0**	71.0	...	...	292	82.6	219	68.8	...	...	...	...	...	...	...	...
4.06	**13.2**	53.0	431	66.0	286	53.8	214	43.8	...	...	...	...	...	...	...	...
4.21	**17.0**	71.0	...	...	275	77.1	206	63.8	...	...	...	...	...	...	...	...
4.24	**15.0**	63.0	...	...	273	65.1	205	53.5	...	...	...	...	...	...	...	...
4.29	**12.5**	53.0	408	60.8	270	49.1	203	39.9	...	...	...	...	...	...	...	38.2
4.48	**16.0**	71.0	...	...	259	71.3	194	58.7	...	...	...	...	...	...	...	...
4.55	**14.0**	63.0	385	71.5	255	59.0	191	48.1	...	...	...	...	...	...	...	...
4.78	**15.0**	71.0	...	...	242	65.3	182	53.5	...	...	...	...	...	...	...	...
ARC-LENGTH CORRECTION FACTOR —>									**...**	**...**	**...**	**...**	**...**	**...**	**...**	**.77**
4.83	**13.2**	63.0	362	66.0	240	53.8	180	43.8	...	...	...	...	...	...	...	...
5.11	**12.5**	63.0	343	60.8	227	49.1	170	39.9	...	...	...	...	...	...	...	...
5.13	**14.0**	71.0	341	71.5	226	59.0	170	48.1	...	...	...	...	...	...	...	...
5.45	**13.2**	71.0	321	66.0	213	53.8	160	43.8	...	...	...	...	...	...	...	...
5.76	**12.5**	71.0	304	60.8	202	49.1	151	39.9	...	...	...	...	...	...	...	...
ARC-LENGTH CORRECTION FACTOR —>									**...**	**...**	**...**	**...**	**...**	**...**	**...**	**...**

NOTE: Arc & Length Factors are approximate values
Refer to Selection Procedure for more precise values

NOTE: Selection program VIA-VISA available at www.ptwizard.com.

DODGE®

8V	D-V Wedge & POLYBAND Belts

STOCK DRIVE SELECTIONS

Speed Ratio	Belt Number and Approx. Center Distance																	
	8VX 2000	8V 2120	8V 2240	8V 2360	8V 2500	8V 2650	8V 2800	8V 3000	8V 3150	8V 3350	8V 3550	8V 3750	8V 4000	8V 4250	8V 4500	8V 4750	8V 5000	8V 5600
2.38	...	44.1	50.5	56.7	64	72	79	89	97	107	117	127	140	152	165	178	190	220
2.39	59.5	65.5	71.6	77.7	85	92	100	110	117	127	137	147	160	172	185	197	210	240
2.42	66.0	72.1	78.1	84.2	91	99	106	116	124	134	144	154	166	179	191	204	216	246
2.49	49.1	55.3	61.5	67.6	75	82	90	100	108	118	128	138	150	163	175	188	200	230
2.51	...	44.9	51.3	57.5	65	72	80	90	98	108	118	128	141	153	166	178	191	221
2.52	54.7	60.8	66.9	73.0	80	88	95	105	113	123	133	143	156	168	181	193	206	236
2.55	...	...	...	...	53	60	68	79	86	97	107	117	130	142	156	167	180	210
2.56	60.2	66.3	72.3	78.4	85	93	100	111	118	128	138	148	161	173	186	198	211	241
2.64	49.8	56.0	62.2	68.3	75	83	91	101	108	118	128	138	151	164	176	189	201	231
2.67	...	45.7	52.1	58.3	66	73	81	91	99	109	119	129	142	154	167	179	192	222
2.69	55.4	61.5	67.6	73.7	81	88	96	106	114	124	134	144	156	168	181	194	206	236
2.72	60.7	66.8	72.9	79.0	86	94	101	111	119	129	139	149	161	174	186	199	211	241
2.80	50.5	56.7	62.9	69.0	76	84	91	101	109	119	129	139	152	164	177	189	202	232
2.81	39.8	46.3	52.7	59.0	66	74	82	92	99	110	120	130	142	155	168	180	193	223
2.83	...	...	...	46.5	54	62	70	80	88	98	108	119	131	144	157	169	182	212
2.87	61.2	67.3	73.4	79.5	86	94	102	112	119	129	139	149	162	174	187	199	212	242
2.88	56.1	62.2	68.4	74.5	82	89	97	107	114	124	134	144	157	170	182	195	207	237
	...	...	...	...	...	52	60	71	79	89	100	110	123	135	148	161	173	203
2.97	40.5	47.0	53.4	59.7	67	75	82	93	100	110	120	131	143	156	168	181	193	224
2.99	51.1	57.4	63.6	59.7	77	84	92	102	110	120	130	140	153	165	178	190	203	233
	.92	**.93**	**.94**	**.95**	**.96**	**.97**	**.99**	**1.00**	**1.01**	**1.02**	**1.03**	**1.04**	**1.05**	**1.06**	**1.07**	**1.08**	**1.09**	**1.10**
2.99	...	...	...	47.2	55	63	71	81	89	99	109	119	132	145	157	170	183	213
3.06	56.6	62.8	68.9	75.0	82	90	97	107	115	125	135	145	158	170	183	195	208	238
3.14	41.4	47.6	54.0	60.3	68	75.	83	93	101	111	121	131	144	156	169	182	194	224
3.17	...	...	...	48.0	56	64	72	82	90	100	110	120	133	146	158	171	184	214
3.19	...	...	...	...	...	54	62	73	81	91	101	111	124	137	150	162	175	205
3.21	51.8	58.1	64.2	70.4	78	85	93	103	111	121	131	141	153	166	178	191	203	234
3.24	57.1	63.3	69.4	75.5	83	90	98	108	115	125	136	146	158	171	183	196	208	233
3.34	41.7	48.3	54.7	61.0	68	76	84	94	102	112	122	132	145	157	170	182	195	225
	...	...	...	48.6	56	64	72	83	90	101	111	121	134	146	159	172	184	214
3.37	...	...	...	...	...	54	63	73	81	92	102	112	125	138	150	163	176	206
	.90	**.91**	**.93**	**.94**	**.95**	**.97**	**.96**	**.99**	**1.00**	**1.01**	**1.02**	**1.03**	**1.04**	**1.05**	**1.06**	**1.07**	**1.08**	**1.10**
3.41	52.3	58.6	64.8	71.0	78	86	93	104	111	121	131	141	154	166	179	191	204	234
3.53	...	...	...	49.2	57	65	73	83	91	101	112	122	134	147	160	172	185	215
3.57	42.3	48.9	55.3	61.7	69	77	84	95	102	112	123	133	145	158	170	183	196	226
3.58	...	...	...	...	...	55	63	74	82	92	103	113	126	139	151	164	177	207
3.60	52.8	59.1	65.3	71.4	79	86	94	104	112	122	132	142	154	167	179	192	204	235
	.88	**.90**	**.91**	**.93**	**.94**	**.96**	**.97**	**.98**	**.99**	**1.01**	**1.02**	**1.03**	**1.04**	**1.05**	**1.06**	**1.07**	**1.08**	**1.10**
3.74	...	...	...	49.9	58	66	74	84	92	102	112	122	135	148	160	173	186	216
3.77	...	...	...	...	...	56	64	75	83	93	104	114	127	139	152	165	177	208
3.83	43.0	49.5	56.0	62.3	70	77	85	95	103	113	123	133	146	159	171	184	196	226
3.97	...	...	43.6	50.5	58	66	74	85	92	103	113	123	135	149	161	174	186	217
3.98	...	...	...	...	...	56	65	75	83	94	104	114	127	140	153	165	178	208
4.06	43.4	50.1	56.5	62.9	70	78	86	96	104	114	124	134	147	159	172	184	197	227
4.21	...	...	...	...	48	57	65	76	84	94	105	115	128	141	153	166	179	209
4.24	...	...	44.2	51.1	59	67	75	85	93	103	114	124	137	149	162	175	187	217
4.29	43.9	50.5	57.0	63.3	71	78	86	96	104	114	124	134	147	160	172	185	197	228
4.48	...	...	...	...	49	58	66	77	85	95	106	116	129	141	154	167	180	210
4.55	...	...	44.8	51.7	59	68	76	86	94	104	114	125	137	150	163	175	188	218
4.78	...	...	...	...	49	58	67	77	85	96	106	117	129	142	155	168	180	211
	.81	**.85**	**.87**	**.89**	**.91**	**.93**	**.95**	**.96**	**.98**	**.99**	**1.00**	**1.01**	**1.03**	**1.04**	**1.05**	**1.06**	**1.07**	**1.09**
4.83	...	...	45.3	52.2	60	68	76	87	94	105	115	125	138	151	163	176	188	219
5.11	...	...	45.7	52.6	60	69	76	87	95	105	115	126	138	151	164	176	189	219
5.13	...	...	...	...	50	59	67	78	86	96	107	117	130	143	156	168	181	211
5.45	...	...	...	...	51	59	68	79	86	97	107	118	131	143	156	169	182	2120
5.76	...	...	...	...	51	60	68	79	87	97	108	118	131	144	157	169	182	212
	...	**...**	**.79**	**.80**	**.82**	**.84**	**.87**	**.91**	**.93**	**.95**	**.97**	**.98**	**1.00**	**1.02**	**1.03**	**1.04**	**1.05**	**1.08**

NOTE: Selection program VIA-VISA available at www.ptwizard.com.

SELECTION

DODGE®

3VX BASIC HORSEPOWER RATINGS Δ

Faster Shaft RPM	Rated HP per belt for Small Sheave O.D. of: 2.2 3VX	2.65 3VX	2.8 3VX	3.0 3VX	3.15 3VX	3.35 3VX	3.65 3VX	4.12 3VX	4.5 3VX	4.75 3VX	5.0 3VX
575	.55	.83	.92	1.04	1.13	1.25	1.43	1.72	1.94	2.09	2.24
690	.64	.97	1.08	1.22	1.33	1.48	1.69	2.02	2.29	2.47	2.64
725	.66	1.01	1.13	1.28	1.39	1.54	1.77	2.12	2.40	2.58	2.76
870	.77	1.18	1.32	1.50	1.63	1.81	2.08	2.49	2.82	3.04	3.26
950	.83	1.28	1.42	1.62	1.77	1.96	2.25	2.70	3.06	3.29	3.52
1160	.98	1.52	1.69	1.93	2.10	2.34	2.68	3.22	3.65	3.93	4.21
1425	1.16	1.81	2.02	2.31	2.52	2.80	3.22	3.86	4.38	4.72	5.06
1750	1.37	2.15	2.41	2.75	3.01	3.34	3.85	4.63	5.25	5.65	6.06
2850	2.00	3.21	3.61	4.14	4.53	5.05	5.82	6.99	7.92	8.53	9.12
3450	2.30	3.74	4.21	4.82	5.28	5.89	6.78	8.15	9.21	9.90	10.6
100	.12	.18	.19	.22	.23	.26	.29	.35	.39	.42	.45
200	.22	.33	.36	.41	.44	.48	.55	.66	.74	.80	.85
300	.31	.47	.52	.58	.63	.70	.80	.95	1.07	1.16	1.24
400	.40	.60	.67	.75	.82	.91	1.03	1.24	1.40	1.50	1.61
500	.49	.73	.81	.92	1.00	1.11	1.27	1.51	1.84	1.97	2.13
600	.57	.86	.95	1.08	1.18	1.30	1.49	1.78	2.02	2.17	2.33
700	.65	.98	1.09	1.24	1.35	1.49	1.71	2.05	2.32	2.50	2.68
800	.72	1.10	1.23	1.39	1.52	1.68	1.93	2.31	2.62	2.82	3.02
900	.80	1.22	1.36	1.54	1.68	1.87	2.14	2.57	2.91	3.13	3.36
1000	.87	1.34	1.49	1.69	1.85	2.05	2.35	2.82	3.20	3.45	3.69
1100	.94	1.45	1.62	1.84	2.01	2.23	2.56	3.07	3.48	3.75	4.02
1200	1.01	1.56	1.74	1.99	2.17	2.41	2.76	3.32	3.76	4.05	4.34
1300	1.08	1.67	1.87	2.13	2.32	2.58	2.97	3.56	4.04	4.35	4.66
1400	1.14	1.78	1.99	2.27	2.48	2.75	3.17	3.80	4.32	4.65	4.98
1500	1.21	1.89	2.11	2.41	2.63	2.93	3.36	4.04	4.59	4.94	5.29
1600	1.27	1.99	2.23	2.55	2.78	3.09	3.56	4.28	4.85	5.23	5.60
1700	1.34	2.10	2.35	2.68	2.93	3.26	3.75	4.51	5.12	5.51	5.90
1800	1.40	2.20	2.47	2.82	3.08	3.43	3.94	4.74	5.38	5.79	6.21
1900	1.46	2.30	2.58	2.95	3.22	3 59	4 13	4.97	5.64	6.07	6.50
2000	1.52	2.40	2.70	3.08	3.37	3.75	4.32	5.19	5.89	6.34	6.79
2100	1.58	2.50	2.81	3.21	3.51	3.91	4.50	5.41	6.14	6.61	7.08
2200	1.64	2.60	2.92	3.34	3.65	4.07	4.68	5.63	6.39	6.88	7.37
2300	1.70	2.70	3.03	3.47	3.79	4.22	4.86	5.85	6.63	7.14	7.65
2400	1.75	2.80	3.14	3.59	3.93	4.38	5.04	6.06	6.88	7.40	7.92
2500	1.81	2.89	3.25	3.72	4.07	4.53	5.22	6.28	7.12	7.66	8.20
2600	1.87	2.98	3.35	3.84	4.20	4.68	5.39	6.48	7.35	7.91	8.47
2700	1.92	3.08	3.46	3.96	4.33	4.83	5.56	6.69	7.58	8.16	8.73
2800	1.97	3.17	3.56	4.08	4.47	4.98	5.73	6.89	7.81	8.40	8.99
2900	2.03	3.26	3.66	4.20	4.60	5.12	5.90	7.09	8.04	8.65	9.25
3000	2.08	3.35	3.76	4.31	4.72	5.26	6.06	7.29	8.26	8.88	9.50
3200	2.18	3.52	3.96	4.54	4.98	5.55	6.39	7.68	8.69	9.34	9.99
3400	2.28	3.69	4.16	4.77	5.22	5.82	6.71	8.05	9.11	9.79	10.5
3600	2.37	3.86	4.35	4.99	5.46	6.09	7.01	8.42	9.52	10.2	10.9
3800	2.47	4.02	4.53	5.20	5.70	6.35	7.31	8.77	9.91	10.6	11.3
4000	2.56	4.18	4.71	5.41	5.92	6.60	7.60	9.11	10.3	11.0	11.7
4200	2.64	4.33	4.89	5.61	6.15	6.85	7.88	9.44	10.6	11.4	12.1
4400	2.73	4.48	5.06	5.81	6.36	7.09	8.15	9.75	11.0	11.7	12.5
4600	2.81	4.63	5.22	6.00	6.57	7.32	8.41	10.0	11.3	12.1	12.8
4800	2.89	4.77	5.38	6.18	6.77	7.54	8.66	10.3	11.6	12.4	13.2
5000	2.96	4.90	5.53	6.36	6.96	7.75	8.90	10.6	11.9	12.7	13.5
5200	3.03	5.04	5.68	6.53	7.15	7.96	9.13	10.9	12.2	13.0	13.7
5400	3.10	5.16	5.83	6.69	7.33	8.15	9.35	11.1	12.4	13.2	14.0
5600	3.17	5.28	5.96	6.85	7.50	8.34	9.56	11.3	12.7	13.5	14.2
5800	3.23	5.40	6.10	7.00	7.66	8.52	9.76	11.5	12.9	13.7	14.4
6000	3.29	5.51	6.22	7.15	7.82	8.69	9.94	11.7	13.1	13.8	14.6
6200	3.35	5.62	6.34	7.28	7.97	8.85	10.1	11.9	13.2	14.0	14.7
6400	3.40	5.72	6.46	7.41	8.11	9.00	10.3	12.1	13.4	14.1	14.8
6600	3.45	5.82	6.57	7.54	8.24	9.14	10.4	12.2	13.5	14.2	14.9
6800	3.50	5.91	6.67	7.65	8.36	9.27	10.5	12.4	13.6	14.3	14.9
7000	3.54	5.99	6.77	7.76	8.48	9.40	10.7	12.5	13.7	14.4	15.5

Shaded areas indicate rim speeds exceeding 6500 FPM which may require special sheaves.
TOTAL RATING = rated HP + "additional HP" listed on opposite page.
Δ Subject to Arc and Length Corrections Factors on page PT7-47.

NOTE: Selection program VIA-VISA available at www.ptwizard.com.

DODGE®

3VX BASIC HORSEPOWER RATINGS Δ

Faster Shaft RPM	Rated HP per Belt for Small Sheave O.D. of: 5.3 3VX	5.6 3VX	6.0 3VX	6.5 3VX	6.9 3VX	8.0 3VX	10.6 3VX	Additional HP per Belt for Speed Ratio of: ‡ 1.02 to 1.05	1.06 to 1.11	1.12 to 1.18	1.19 to 1.26	1.27 to 1.38	1.39 to 1.57	1.58 to 1.94	1.95 to 3.38	3.39 and up
575	2.41	2.59	2.82	3.11	3.34	3.97	5.42	.01	.02	.04	.06	.07	.09	.10	.11	.11
690	2.85	3.06	3.33	3.67	3.95	4.69	6.39	.01	.03	.05	.07	.09	.10	.11	.12	.13
725	2.98	3.20	3.49	3.84	4.13	4.90	6.69	.01	.03	.05	.07	.09	.11	.12	.13	.14
870	3.51	3.77	4.11	4.53	4.87	5.78	7.87	.01	.03	.06	.09	.11	.13	.14	.16	.17
950	3.80	4.08	4.45	4.91	5.27	6.25	8.51	.01	.04	.07	.10	.12	.14	.16	.17	.18
1160	4.55	4.88	5.32	5.87	6.30	7.47	10.1	.02	.05	.09	.12	.14	.17	.19	.21	.22
1425	5.46	5.86	6.38	7.03	7.55	8.94	12.0	.02	.06	.11	.15	.18	.21	.24	.26	.28
1750	6.53	7.01	7.63	8.40	9.01	10.6	14.2	.03	.07	.13	.18	.22	.25	.29	.31	.33
2850	9.82	10.5	11.4	12.5	13.3	15.5	19.6	.04	.12	.22	.30	.36	.42	.48	.52	.55
3450	11.4	12.1	13.1	14.3	15.2	17.3	20.8	.05	.15	.27	.36	.44	.51	.58	.63	.67
100	.48	.52	.56	.62	.67	.79	1.08	.00	.00	.01	.01	.01	.01	.02	.02	.02
200	.92	.98	1.07	1.18	1.27	1.50	2.05	.00	.01	.01	.01	.02	.03	.03	.03	.03
300	1.33	1.43	1.56	1.71	1.84	2.18	2.99	.00	.01	.02	.03	.03	.04	.05	.05	.05
400	1.73	1.86	2.03	2.23	2.40	2.85	3.89	.01	.02	.03	.04	.05	.06	.06	.07	.08
500	2.13	2.28	2.48	2.74	2.94	3.49	4.77	.01	.02	.03	.05	.06	.07	.08	.09	.10
600	2.51	2.69	2.93	3.23	3.47	4.13	5.63	.01	.02	.04	.06	.08	.09	.10	.11	.11
700	2.89	3.10	3.38	3.72	4.00	4.75	6.48	.01	.03	.05	.07	.09	.10	.12	.12	.13
800	3.26	3.50	3.81	4.20	4.51	5.36	7.30	.01	.03	.06	.08	.10	.12	.13	.14	.15
900	3.62	3.89	4.24	4.67	5.02	5.96	8.11	.01	.04	.07	.09	.11	.13	.15	.16	.17
1000	3.98	4.27	4.66	5.14	5.52	6.55	8.90	.01	.04	.08	.10	.12	.15	.17	.18	.19
1100	4.34	4.65	5.07	5.59	6.01	7.13	9.68	.02	.04	.08	.11	.14	.16	.19	.20	.21
1200	4.69	5.03	5.48	6.04	6.49	7.69	10.4	.02	.05	.09	.12	.15	.18	.20	.22	.23
1300	5.03	5.40	5.89	6.49	6.97	8.25	11.2	.02	.05	.10	.13	.16	.19	.22	.23	.25
1400	5.37	5.77	6.29	6.93	7.43	8.80	11.9	.02	.06	.11	.14	.18	.21	.23	.26	.27
1500	5.71	6.13	6.68	7.36	7.89	9.34	12.6	.02	.06	.11	.16	.19	.22	.25	.28	.29
1600	6.04	6.48	7.06	7.78	8.35	9.87	13.3	.02	.07	.12	.17	.20	.24	.27	.29	.31
1700	6.37	6.83	7.45	8.20	8.79	10.4	14.0	.02	.07	.13	.18	.21	.25	.29	.31	.33
1800	6.70	7.18	7.82	8.61	9.23	10.9	14.5	.03	.08	.13	.19	.23	.27	.30	.33	.34
1900	7.01	7.52	8.19	9.01	9.66	11.4	15.1	.03	.08	.14	.20	.25	.28	.32	.35	.37
2000	7.33	7.86	8.55	9.41	10.1	11.9	15.7	.03	.09	.15	.21	.25	.30	.33	.37	.39
2100	7.64	8.19	8.91	9.80	10.5	12.3	16.3	.03	.09	.16	.22	.27	.31	.35	.38	.40
2200	7.94	8.51	9.26	10.2	11.0	12.8	16.8	.03	.10	.17	.23	.28	.33	.37	.40	.43
2300	8.25	8.84	9.61	10.5	11.3	13.2	17.3	.03	.10	.18	.24	.29	.34	.39	.42	.45
2400	8.54	9.15	9.95	10.9	11.7	13.7	17.8	.03	.11	.19	.25	.30	.36	.40	.44	.47
2500	8.83	9.46	10.3	11.3	12.1	14.1	18.2	.04	.11	.19	.26	.32	.37	.42	.46	.48
2600	9.12	9.77	10.6	11.6	12.4	14.5	18.6	.04	.11	.20	.27	.33	.39	.44	.48	.50
2700	9.40	10.1	10.9	12.0	12.8	14.9	19.0	.04	.12	.21	.29	.35	.40	.46	.49	.52
2800	9.68	10.4	11.2	12.3	13.1	15.3	19.4	.04	.13	.21	.29	.36	.42	.47	.51	.54
2900	9.95	10.6	11.6	12.6	13.5	15.6	19.7	.04	.13	.22	.30	.37	.43	.49	.53	.56
3000	10.2	10.9	11.8	13.0	13.8	16.0	20.0	.04	.13	.23	.31	.38	.45	.50	.55	.58
3200	10.7	11.5	12.4	13.6	14.4	16.6	20.5	.05	.14	.24	.33	.40	.48	.54	.58	.62
3400	11.2	12.0	13.0	14.1	15.0	17.2	20.8	.05	.15	.26	.36	.43	.50	.57	.62	.66
3600	11.7	12.5	13.5	14.7	15.6	17.7	21.0	.06	.16	.28	.38	.46	.54	.61	.66	.69
3800	12.2	12.9	14.0	15.2	16.1	18.2	...	.06	.17	.29	.40	.48	.57	.64	.69	.74
4000	12.6	13.4	14.4	15.6	16.5	18.5	...	.06	.18	.31	.42	.51	.59	.67	.73	.77
4200	13.0	13.8	14.8	16.0	16.9	18.8	...	.07	.19	.32	.44	.54	.63	.71	.77	.82
4400	13.4	14.2	15.2	16.4	17.2	19.0	...	.07	.21	.34	.46	.56	.66	.74	.81	.85
4600	13.7	14.5	15.6	16.7	17.5	19.1	...	.07	.21	.36	.47	.58	.68	.77	.84	.89
4800	14.1	14.8	15.8	17.0	17.7	19.2	...	.08	.21	.37	.50	.61	.72	.81	.88	.93
5000	14.3	15.1	16.1	17.2	17.9	...	...	.08	.22	.39	.53	.64	.75	.83	.92	.97
5200	14.6	15.4	16.3	17.4	18.0	...	...	.08	.23	.40	.55	.66	.77	.87	.95	1.01
5400	14.8	15.6	16.5	17.4	18.0	...	...	.09	.24	.41	.57	.69	.81	.91	.99	1.05
5600	15.1	15.8	16.7	17.5	...	...	...	.09	.25	.44	.61	.73	.85	.94	1.05	1.11
5800	15.2	15.9	16.7	17.5	...	...	...	.09	.26	.45	.61	.74	.86	.97	1.06	1.13
6000	15.4	16.0	16.8	...	...	...	...	.10	.27	.47	.64	.78	.91	1.03	1.12	1.19
6200	15.5	16.1	16.8	...	...	...	...	.10	.28	.47	.66	.81	.94	1.06	1.16	1.21
6400	15.5	16.1	16.7	...	...	...	...	.10	.28	.49	.67	.81	.94	1.08	1.17	1.24
6600	15.6	16.1	...	...	...	...	...	.11	.29	.51	.69	.84	.99	1.11	1.18	1.29
6800	15.6	16.0	...	...	...	...	...	.11	.30	.52	.72	.87	1.01	1.14	1.25	1.29
7000	15.5	...	...	...	...	...	...	.11	.31	.52	.74	.89	1.04	1.18	1.29	1.36

Shaded areas indicate rim speeds exceeding 6500 FPM which may require higher strength sheaves.
TOTAL RATING = rated HP + "additional HP" from right hand column.
‡ Additional HP below 1.02 ratio equals zero.
Δ Subject to Arc and Length Corrections Factors on page PT7-47.

NOTE: Selection program VIA-VISA available at www.ptwizard.com.

SELECTION

DODGE®

5VX 5V BASIC HORSEPOWER RATINGS Δ

Faster Shaft RPM	Rated HP per Belt for Small Sheave O.D. of:																					
	4.4	4.65	4.9	5.5	6.3	6.7	7.1		7.5		8.0		8.5		9.0		9.25		9.75		10.3	
	5VX						5VX	5V	5VX	5V	5VX	5V	5VX	5V	5VX	5V	5VX	5V	5VX	5V	5VX	5V
435	2.57	2.90	3.22	3.99	5.01	5.52	6.03	4.99	6.53	5.48	7.16	6.10	7.78	6.72	8.40	7.33	8.71	7.64	9.32	8.25	10.0	8.91
485	2.82	3.18	3.54	4.40	5.53	6.09	6.65	5.48	7.20	6.03	7.90	6.71	8.58	7.39	9.27	8.07	9.61	8.41	10.3	9.08	11.0	9.81
585	3.27	3.69	4.11	5.11	6.43	7.09	7.87	6.44	8.53	7.09	9.35	7.91	10.2	8.71	11.0	9.51	11.4	9.91	12.2	10.7	13.1	11.6
690	3.82	4.32	4.81	6.00	7.57	8.34	9.12	7.42	9.88	8.17	10.8	9.12	11.8	10.0	12.7	11.0	13.2	11.4	14.1	12.4	152	13.4
725	3.98	4.50	5.02	6.27	7.90	8.72	9.53	7.74	10.3	8.53	11.3	9.51	12.3	10.5	13.3	11.4	13.8	11.9	14.8	12.9	15.8	13.9
870	4.64	5.26	5.88	7.35	9.28	10.24	11.2	9.02	12.1	9.95	13.3	11.1	14.5	12.2	15.7	13.4	16.2	13.9	17.4	15.1	18.6	16.3
950	5.00	5.67	6.34	7.93	10.03	11.07	12.1	9.70	13.1	10.7	14.4	11.9	15.6	13.2	16.9	14.4	17.6	15.0	18.8	16.2	20.1	17.5
1160	5.90	6.71	7.51	9.42	11.93	13.17	14.4	11.4	15.6	12.6	17.1	14.1	18.6	15.5	20.1	16.9	20.9	17.7	22.3	19.0	23.9	20.6
1425	6.98	7.95	8.92	11.21	14.23	15.71	17.2	13.4	18.6	14.8	20.4	16.5	22.2	182	24.0	19.9	24.9	20.7	26.6	22.3	28.5	24.1
1750	8.23	9.40	10.55	13.30	16.89	18.66	20.4	15.6	22.1	17.2	24.3	19.2	26.3	21.1	28.4	23.0	29.4	23.9	31.4	25.8	33.6	27.7
2850	11.86	13.62	15.35	19.42	24.64	27.15	29.6	20.5	32.0	22.5	34.8	24.9	37.6	27.0	40.2	29.0	41.5	29.9	43.9	31.6	46.5	33.2
3450	13.45	15.47	17.46	22.09	27.93	30.69	33.3	21.3	35.9	23.2	38.9	25.3	41.7	27.1	44.3	28.6	45.5	29.2	47.7	30.1	49.9	30.7
100	0.71	0.79	0.87	1.07	1.33	1.45	1.58	1.36	1.71	1.48	1.87	1.64	2.02	1.80	2.18	1.96	2.26	2.04	2.42	2.19	2.59	2.36
200	1.31	1.47	1.62	2.00	2.49	2.73	2.98	2.52	3.2	2.76	3.53	3.06	3.83	3.36	4.13	3.66	4.28	3.81	4.58	4.11	4.91	4.44
300	1.86	2.09	2.32	2.87	3.59	3.95	4.31	3.60	4.6	3.96	5.11	4.40	5.55	4.83	5.99	5.27	6.21	5.49	6.64	5.92	7.12	6.39
400	2.39	2.69	2.99	3.71	4.65	5.12	5.59	4.63	6.0	5.10	6.63	5.67	7.21	6.24	7.78	6.81	8.07	7.09	8.64	7.65	9.26	8.27
500	2.90	3.27	3.64	4.52	5.68	6.26	6.83	5.63	7.4	6.19	8.12	6.90	8.82	7.59	9.53	8.29	9.88	8.64	10.6	9.33	11.3	10.1
600	3.39	3.83	4.26	5.31	6.68	7.37	8.05	6.58	8.7	7.25	9.56	8.08	10.4	8.91	112	9.72	11.6	10.1	12.5	10.9	13.4	11.8
700	3.86	4.37	4.87	6.08	7.66	8.45	9.23	7.51	10.0	8.28	11.0	9.23	11.9	10.2	12.9	11.1	13.4	11.6	14.3	12.5	15.4	13.5
800	4.33	4.90	5.47	6.83	8.62	9.51	10.4	8.41	11.3	9.27	12.4	10.3	13.4	11.4	14.5	12.5	15.1	13.0	16.1	14.0	17.3	15.2
900	4.78	5.41	6.05	7.57	9.56	10.55	11.5	9.28	12.5	10.2	13.7	11.4	14.9	12.6	16.1	13.8	16.7	14.3	17.9	15.5	19.2	16.7
1000	5.22	5.92	6.62	8.29	10.49	11.57	12.7	10.1	13.7	11.2	15.1	12.5	16.4	13.7	17.7	15.0	18.4	15.6	19.6	16.9	21.1	18.3
1100	5.65	6.41	7.18	9.00	11.39	12.58	13.7	10.9	14.9	12.1	16.4	13.5	17.8	14.9	19.2	16.2	19.9	16.9	21.3	18.3	22.9	19.7
1200	3.07	6.90	7.72	9.69	12.28	13.56	14.8	11.7	16.1	12.9	17.6	14.5	1.92	15.9	20.7	17.4	21.5	18.1	23.0	19.6	24.6	21.1
1300	6.48	7.37	8.26	10.36	13.16	14.53	15.9	12.5	17.2	13.8	18.9	15.4	20.6	17.0	22.2	18.5	23.0	19.3	24.6	20.8	26.4	22.5
1400	6.88	7.84	8.79	11.05	14.01	15.48	16.9	1.32	18.4	14.6	20.1	16.3	21.9	18.0	23.6	19.6	24.5	20.4	262	22.0	28.1	23.8
1500	7.28	8.29	9.30	11.71	14.86	16.41	17.9	13.9	19.5	15.4	21.3	17.2	23.2	18.9	25.1	20.7	25.9	21.5	27.7	23.2	29.7	25.0
1600	7.66	8.74	9.81	12.35	15.68	17.32	18.9	14.6	20.5	1.62	22.5	18.0	24.5	19.8	26.4	21.6	27.4	22.5	29.3	24.3	31.3	26.1
1700	8.04	9.18	10.31	12.99	16.50	18.22	19.9	15.3	21.6	16.9	23.7	18.8	25.7	20.7	27.7	22.6	28.7	23.5	30.7	25.3	32.8	27.2
1800	8.42	9.61	10.80	13.61	17.29	19.10	20.8	15.9	22.6	17.6	24.8	19.6	26.9	21.5	29.1	23.5	30.1	24.4	32.1	26.2	34.3	28.2
1900	8.78	10.03	11.28	14.22	18.07	19.96	21.8	16.5	23.6	1.82	25.9	20.3	28.1	22.3	30.3	24.3	31.4	25.3	33.5	27.1	35.8	29.1
2000	9.14	10.45	11.74	14.82	18.33	20.80	22.7	17.1	24.6	18.8	27.0	21.0	29.3	23.1	31.5	25.1	32.6	26.0	34.8	27.9	37.2	29.9
2100	9.48	10.85	12.20	15.41	19.58	21.62	23.6	17.6	25.6	19.4	28.0	21.6	30.4	23.7	32.7	25.8	33.9	26.8	36.1	28.7	38.5	30.7
2200	9.83	11.25	12.66	15.99	20.31	22.43	24.5	18.1	26.5	20.0	29.0	22.2	31.5	24.4	33.9	26.4	35.0	27.4	37.3	29.3	39.7	31.3
2300	10.16	11.64	13.10	16.55	21.03	23.21	25.3	18.6	27.5	20.5	30.0	22.8	32.5	24.9	35.0	27.0	36.2	28.0	36.5	29.9	30.9	31.9
2400	10.49	12.01	13.53	17.10	21.72	23.97	26.2	19.0	28.3	20.9	31.0	23.3	33.5	25.5	36.0	27.5	37.2	28.5	39.6	30.4	42.1	32.4
2500	10.81	12.39	13.95	17.64	22.40	24.72	27.0	19.4	29.2	21.4	31.9	23.7	34.5	25.9	37.0	28.0	38.3	29.0	40.7	30.9	43.2	32.7
2600	11.12	12.75	14.36	18.16	23.06	25.44	27.7	19.8	30.0	21.7	32.8	24.1	35.5	26.3	38.0	28.4	39.3	29.4	41.7	31.2	44.2	33.0
2700	11.42	13.10	14.77	18.68	23.71	26.14	28.5	20.1	30.8	22.1	33.6	24.5	36.4	26.7	39.0	28.7	40.2	29.7	42.6	31.4	45.2	33.2
2800	11.72	13.45	15.16	19.18	24.33	26.82	29.2	20.4	31.6	22.4	34.5	24.8	37.2	26.9	39.8	28.9	41.1	29.9	43.5	31.6	46.1	33.3
2900	12.00	13.78	15.54	19.66	24.94	27.48	29.9	20.6	32.3	22.6	35.2	25.0	38.0	27.2	40.6	29.1	41.9	30.0	44.4	31.6	46.9	33.2
3000	12.28	14.11	15.91	20.14	25.53	28.12	30.6	20.8	33.1	22.8	36.0	25.2	38.8	27.3	41.4	29.2	42.7	30.1	45.1	31.6	47.6	33.0
3100	12.56	14.43	16.28	20.60	26.10	28.73	31.3	21.0	33.7	23.0	36.7	25.3	39.5	27.4	42.1	29.2	43.4	30.0	45.8	31.5	48.3	32.7
3200	12.82	14.74	16.63	21.04	26.65	29.32	31.9	21.1	34.4	23.1	37.3	25.4	40.2	2.74	42.8	29.1	41.1	29.9	46.5	31.2	48.8	32.3
3300	13.08	15.04	16.97	21.47	27.17	29.88	32.5	21.2	35.0	23.2	38.0	25.4	40.8	27.3	43.4	29.0	44.7	29.7	47.1	30.9	49.4	31.8
3400	13.33	15.33	17.30	21.89	27.68	30.43	33.1	21.3	35.6	23.2	38.6	25.3	41.4	27.2	44.1	28.7	45.2	29.4	47.5	30.4	49.8	31.1
3500	13.57	15.61	17.62	22.29	28.17	30.94	33.6	21.3	36.1	23.2	39.1	25.2	41.9	27.0	44.5	28.4	45.7	28.9	47.9	29.8	50.1	30.3
3600	13.80	15.88	17.93	22.68	28.63	31.43	34.1	21.2	36.6	23.1	39.6	25.1	42.4	26.7	45.0	27.9	46.1	28.4	48.3	29.1	50.4	29.4
3700	14.02	16.14	18.23	23.05	29.07	31.90	34.6	21.1	37.1	23.0	40.1	24.8	42.8	26.3	45.3	27.4	46.5	27.8	48.5	27.3	50.5	28.3
3800	14.23	16.40	18.51	23.41	29.49	32.33	35.0	21.0	37.6	22.7	40.5	24.5	43.2	25.8	45.7	26.3	46.8	27.1	48.7	27.4	...	...
3900	14.44	16.64	18.79	23.75	29.89	32.74	35.4	20.7	38.0	22.4	40.9	24.1	43.5	25.3	45.9	26.1	47.0	26.3	48.9	26.3	...	...
4000	14.64	16.87	19.05	24.07	30.26	33.13	35.8	20.5	38.3	22.1	41.2	23.6	43.8	24.7	46.1	25.3	47.1	25.3	...	...	...	...

Shaded areas indicate rim speeds exceeding 6500 FPM which may require higher strength sheaves.
TOTAL RATING = rated HP + "additional HP" from right hand column.
‡ Additional HP below 1.02 ratio equals zero.
Δ Subject to Arc and Length Corrections Factors on page PT7-47.

NOTE: Selection program VIA-VISA available at www.ptwizard.com.

DODGE®

5VX 5V BASIC HORSEPOWER RATINGS Δ

Faster Shaft RPM	Rated HP per Belt for Small Sheave O.D. of:														Additional HP per Belt for Speed Ratio of: ‡								
	10.9		11.8		12.5		13.2		14.0		15.0		16.0		1.02 to 1.05	1.06 to 1.11	1.12 to 1.18	1.19 to 1.26	1.27 to 1.38	1.39 to 1.57	1.58 to 1.94	1.95 to 3.38	3.39 and up
	5VX	5V	5VX	5V	5VX	5V	5VX	5V	5VX	5V	5VX	5V	5VX	5V									
435	10.7	9.64	11.8	10.7	12.7	11.5	13.5	12.4	14.5	13.3	15.6	14.5	16.8	15.6	.03	.10	.17	.24	.29	.34	.38	.41	.44
485	11.8	10.6	13.1	11.8	14.0	12.7	14.9	13.6	16.0	14.6	17.3	15.9	18.6	17.2	.04	.11	.19	.26	.32	.38	.43	.46	.49
585	14.0	12.5	15.5	13.9	16.6	15.0	17.7	16.1	18.9	17.3	20.4	18.8	22.0	20.2	.05	.13	.24	.31	.39	.46	.51	.56	.59
690	16.3	14.4	17.9	16.0	19.2	17.3	20.5	18.5	21.9	19.9	23.7	21.6	25.4	23.3	.06	.16	.27	.38	.46	.54	.61	.66	.70
725	17.0	15.1	18.8	16.7	20.1	18.0	21.4	19.3	22.9	20.7	24.7	22.5	26.6	24.3	.06	.17	.29	.40	.48	.56	.63	.69	.72
870	20.0	17.6	22.0	19.5	23.6	21.0	25.1	22.5	26.9	24.1	29.0	26.2	31.1	28.1	.07	.20	.35	.46	.58	.67	.77	.83	.88
950	21.6	18.9	23.8	21.0	25.5	22.6	27.1	24.2	28.9	25.9	31.3	28.0	33.5	30.1	.08	.22	.38	.52	.63	.74	.83	.91	.96
1160	25.7	22.2	28.2	24.6	30.2	26.4	32.1	28.2	34.3	30.2	36.9	32.5	39.5	34.8	.10	.26	.47	.63	.77	.90	1.02	1.11	1.17
1425	30.5	25.9	33.5	28.6	35.7	30.6	37.9	32.6	40.4	34.7	43.4	37.2	46.2	39.5	.12	.33	.57	.78	.95	1.11	1.24	1.35	1.45
1750	35.9	29.7	39.3	32.6	41.8	34.7	44.2	36.7	46.9	38.7	50.1	41.1	53.0	43.1	.15	.40	.70	.96	1.17	1.37	1.50	1.68	1.77
2850	49.0	34.7	52.5	36.2	54.8	6.9	56.8	37.0	...	...	...	...	...	...	.24	.66	1.15	1.56	1.80	2.22	2.50	2.73	2.89
3450	52.0	30.9	...	...	...	...	...	...	...	...	...	...	...	...	.29	.80	1.39	1.90	2.20	2.69	3.03	3.30	3.50
100	2.77	2.55	3.05	2.83	3.27	3.04	3.48	3.26	3.73	3.50	4.03	3.80	4.33	4.11	.01	.02	.04	.05	.07	.08	.09	.09	.10
200	5.26	4.79	5.80	5.32	6.21	5.73	6.62	6.14	7.09	6.60	7.67	7.18	8.25	7.75	.01	.04	.08	.11	.13	.16	.17	.19	.20
300	7.64	6.91	8.42	7.68	9.02	8.27	9.62	8.86	10.3	9.54	11.1	10.37	12.0	11.2	.02	.07	.12	.16	.20	.23	.26	.29	.30
400	9.94	8.94	10.9	9.94	11.7	10.7	12.5	11.5	13.4	12.3	14.5	13.4	15.6	14.5	.03	.09	.16	.22	.26	.31	.35	.38	.40
500	12.2	10.9	13.4	12.1	14.4	13.0	15.3	14.0	16.4	15.0	17.7	16.3	19.1	17.7	.04	.11	.20	.27	.33	.39	.44	.46	.50
600	14.3	12.8	15.8	14.2	16.9	15.3	18.1	16.4	19.3	17.6	20.9	19.2	22.5	20.7	.05	.14	.24	.33	.40	.47	.53	.57	.61
700	16.5	14.6	18.2	16.2	19.5	17.5	20.7	18.7	22.2	20.1	24.0	21.8	25.8	23.6	.06	.16	.28	.38	.47	.55	.62	.67	.71
800	18.6	16.4	20.5	18.2	21.9	19.6	23.3	21.0	24.9	22.5	27.0	24.4	28.9	26.1	.07	.18	.32	.44	.53	.62	.70	.77	.81
900	20.6	18.1	22.7	20.1	24.3	21.6	25.9	23.1	27.7	24.8	29.9	26.9	32.0	28.9	.08	.21	.36	.49	.60	.70	.79	.86	.91
1000	22.6	19.7	24.9	21.9	26.6	23.5	28.3	25.2	30.3	27.0	32.7	29.2	35.0	31.3	.08	.23	.39	.55	.66	.78	.87	.95	1.01
1100	24.5	21.3	27.0	23.6	28.9	25.3	30.7	27.1	32.8	29.0	35.4	31.3	37.8	33.6	.09	.25	.44	.60	.73	.86	.96	1.05	1.11
1200	26.4	22.8	29.0	25.3	31.1	27.1	33.0	28.9	35.2	30.9	37.9	33.3	40.6	35.6	.10	.27	.48	.66	.80	.93	1.05	1.15	1.22
1300	28.3	24.2	31.1	26.8	33.2	28.7	35.3	30.6	37.6	32.7	40.4	35.2	43.2	37.5	.11	.30	.52	.71	.86	1.01	1.14	1.24	1.32
1400	30.1	25.6	33.0	28.3	35.2	30.3	37.4	32.2	39.8	34.3	42.8	36.8	45.6	39.2	.11	.32	.56	.77	.93	1.09	1.23	1.34	1.42
1500	31.8	26.9	34.9	29.6	37.2	31.7	39.5	33.6	42.0	35.8	45.0	38.3	47.9	40.6	.12	.34	.61	.82	1.00	1.18	1.32	1.44	1.52
1600	33.5	28.1	36.7	30.9	39.1	33.0	41.4	34.9	44.0	37.1	47.1	39.6	50.1	41.8	.13	.37	.64	.88	1.07	1.25	1.40	1.53	1.62
1700	35.1	29.2	38.4	32.1	40.9	34.1	43.3	36.1	46.0	38.2	49.1	40.6	52.1	42.7	.14	.39	.69	.93	1.13	1.32	1.49	1.61	1.72
1800	36.7	30.2	40.1	33.1	42.6	35.2	45.1	37.2	47.8	39.2	51.0	41.5	53.9	43.4	.15	.41	.72	.99	1.20	1.40	1.58	1.72	1.83
1900	38.2	31.2	41.7	34.0	44.3	36.1	46.8	38.0	49.5	40.0	52.7	42.1	55.6	43.9	.16	.44	.77	1.04	1.26	1.48	1.67	1.82	1.93
2000	39.6	32.0	43.2	34.8	45.8	36.9	48.3	38.7	51.1	40.6	54.2	42.5	57.1	44.0	.17	.46	.80	1.10	1.33	1.56	1.77	1.92	2.03
2100	41.0	32.7	44.6	35.5	47.3	37.5	49.8	39.2	52.5	40.9	55.6	42.7	58.3	43.8	.18	.48	.85	1.15	1.40	1.64	1.85	2.01	2.13
2200	42.3	33.4	46.0	36.1	48.6	38.0	51.1	39.6	53.8	41.1	56.8	42.5	59.4	43.4	.18	.51	.89	1.21	1.47	1.71	1.93	2.10	2.23
2300	43.6	33.9	47.2	36.5	49.9	38.3	52.4	39.7	55.0	41.1	57.8	42.1	60.3	42.6	.19	.52	.93	1.26	1.53	1.79	2.02	2.20	2.33
2400	44.7	34.3	48.4	36.8	51.0	38.4	53.5	39.7	56.0	40.8	58.7	41.5	61.0	41.4	.20	.55	.96	1.32	1.60	1.87	2.11	2.30	2.44
2500	45.8	34.6	49.5	36.9	52.1	38.4	54.4	39.5	56.8	40.3	59.4	40.5	...	...	.21	.57	1.01	1.38	1.67	1.95	2.20	2.39	2.54
2600	46.8	34.8	50.5	36.9	53.0	38.2	55.3	39.0	57.6	39.5	...	...	...	...	.22	.60	1.05	1.43	1.73	2.03	2.29	2.49	2.64
2700	47.8	34.9	51.3	36.8	53.8	37.8	56.0	38.4	58.1	38.5	...	...	...	...	.23	.62	1.09	1.48	1.80	2.11	2.37	2.59	2.74
2800	48.6	34.8	52.1	36.4	54.5	37.2	56.5	37.5	...	...	...	...	...	...	.24	.64	1.13	1.59	1.86	2.18	2.46	2.68	2.84
2900	49.4	34.6	52.8	35.9	55.0	36.4	56.9	36.4	...	...	...	...	...	...	.24	.67	1.17	1.60	1.93	2.26	2.55	2.78	2.94
3000	50.1	34.2	53.4	35.3	55.5	35.5	...	...	...	...	...	...	...	...	.25	.69	1.21	1.65	2.00	2.34	2.63	2.87	3.05
3100	50.7	33.7	53.8	34.5	...	...	...	...	...	...	...	...	...	...	.26	.72	1.25	1.70	2.07	2.42	2.72	2.97	3.15
3200	51.2	33.1	54.1	33.4	...	...	...	...	...	...	...	..	...	...	.27	.74	1.29	1.76	2.14	2.50	2.81	3.07	3.25
3300	51.6	32.3	...	...	...	...	...	...	...	...	...	...	...	...	.28	.77	1.33	1.81	2.20	2.58	2.90	3.16	3.35
3400	51.9	31.4	...	...	...	...	...	...	...	...	...	...	...	...	.29	.79	1.37	1.87	2.27	2.65	2.99	3.26	3.45
3500	52.1	30.3	...	...	...	...	...	...	...	...	...	...	...	...	.30	.81	1.41	1.92	2.33	2.73	3.08	3.35	3.55
3600	...	...	...	...	...	...	...	...	...	...	...	...	...	...	.31	.83	1.45	1.98	2.40	2.81	3.16	3.45	3.65
3700	...	...	...	...	...	...	...	...	...	...	...	...	...	...	.32	.86	1.49	2.03	2.47	2.89	3.25	3.54	3.76
3800	...	...	...	...	...	...	...	...	...	...	...	...	...	...	.32	.88	1.53	2.09	2.53	2.97	3.34	3.64	3.85
3900	...	...	...	...	...	...	...	...	...	...	...	...	...	...	.33	.90	1.57	2.14	2.60	3.05	3.43	3.74	3.96
4000	...	...	...	...	...	...	...	...	...	...	...	...	...	...	.34	.93	1.61	2.20	2.67	3.12	3.52	3.83	4.06

Shaded areas indicate rim speeds exceeding 6500 FPM which may require higher strength sheaves.
TOTAL RATING = rated HP + "additional HP" from right hand column.
‡ Additional HP below 1.02 ratio equals zero.
Δ Subject to Arc and Length Corrections Factors on page PT7-47.

NOTE: Selection program VIA-VISA available at www.ptwizard.com.

SELECTION

DODGE®

8V BASIC HORSEPOWER RATINGS Δ

Faster Shaft RPM	Rated HP per Belt for Small Sheave O.D. of:												Additional HP per Belt for Speed Ratio of: ‡								
	12.5	13.2	14.0	15.0	16.0	17.0	18.0	19.0	20.0	21.2	22.4	24.8	1.02 to 1.05	1.06 to 1.11	1.12 to 1.18	1.19 to 1.26	1.27 to 1.38	1.39 to 1.57	1.58 to 1.94	1.95 to 3.38	3.39 and up
435	20.1	22.3	24.8	27.8	30.9	33.9	36.8	39.8	42.7	46.2	49.7	56.4	.20	.56	.97	1.32	1.60	1.87	2.11	2.30	2.43
485	22.0	24.4	27.1	30.5	33.8	37.1	40.4	43.6	46.9	50.7	54.4	61.8	.23	.62	1.08	1.47	1.78	2.09	2.35	2.56	2.71
585	25.7	28.5	31.7	35.6	39.5	43.4	47.2	50.9	54.6	59.0	63.3	71.6	.27	.75	1.30	1.77	2.15	2.52	2.83	3.09	3.27
690	29.3	32.6	36.2	40.7	45.2	49.5	53.8	58.0	62.2	67.0	71.8	80.9	.32	.88	1.54	2.09	2.54	2.97	3.34	3.64	3.86
725	30.5	33.8	37.6	42.3	46.9	51.5	55.9	60.3	64.5	69.5	74.4	83.7	.34	.93	1.61	2.20	2.67	3.12	3.51	3.83	4.06
870	35.0	38.9	43.2	48.6	53.8	58.9	63.9	68.7	73.4	78.8	84.0	93.8	.41	1.11	1.94	2.64	3.20	3.74	4.22	4.59	4.87
950	37.3	41.4	46.0	51.7	57.2	62.6	67.7	72.8	77.6	83.1	88.4	98.1	.45	1.21	2.11	2.88	3.49	4.09	4.60	5.02	5.32
1160	42.6	47.3	52.5	58.8	64.8	70.6	76.1	81.2	86.1	91.5	96.5	104.8	.54	1.48	2.58	3.52	4.27	4.99	5.62	6.13	6.49
1425	47.6	52.7	58.4	65.0	71.2	76.9	82.1	86.8	90.9	95.0	98.3	102.1	.67	1.82	3.17	4.32	5.24	6.13	6.91	7.52	7.97
1750	50.9	56.1	61.7	67.9	73.3	77.8	81.5	84.2	85.8	86.5	...	...	.82	2.24	3.90	5.30	6.44	7.53	8.48	9.24	9.79
50	3.01	3.31	3.64	4.06	4.47	4.88	5.30	5.70	6.11	6.60	7.09	8.0	.02	.06	.11	.15	.18	.22	.24	.26	.28
100	5.59	6.15	6.79	7.59	8.38	9.17	9.96	10.7	11.5	12.5	13.4	15.2	.05	.13	.22	.30	.37	.43	.48	.53	.56
150	8.00	8.82	9.76	10.9	12.1	13.2	14.4	15.5	16.6	18.0	19.4	22.0	.07	.19	.33	.45	.55	.65	.73	.79	.84
200	10.3	11.4	12.6	14.1	15.6	17.1	18.6	20.1	21.6	23.3	25.1	28.6	.09	.26	.45	.61	.74	.86	.97	1.06	1.12
250	12.5	13.8	15.3	17.2	19.0	20.9	22.7	24.5	26.3	28.5	30.7	34.9	.12	.32	.56	.76	.92	1.08	1.21	1.32	1.40
300	14.6	16.2	18.0	20.2	22.4	24.5	26.7	28.8	31.0	33.5	36.0	41.0	.14	.38	.67	.91	1.10	1.29	1.45	1.58	1.68
350	16.7	18.5	20.5	23.1	25.6	28.1	30.5	33.0	35.4	38.3	41.2	46.9	.16	.45	.78	1.06	1.29	1.51	1.70	1.85	1.96
400	18.7	20.7	23.0	25.9	28.7	31.5	34.3	37.0	39.8	43.0	46.3	52.6	.19	.51	.89	1.21	1.47	1.72	1.94	2.11	2.24
450	20.7	22.9	25.5	28.6	31.8	34.9	37.9	41.0	44.0	47.6	51.1	58.1	.21	.58	1.00	1.36	1.66	1.94	2.18	2.38	2.52
500	22.6	25.0	27.8	31.3	34.7	38.1	41.5	44.8	48.1	51.9	55.8	63.3	.23	.64	1.11	1.52	1.84	2.15	2.42	2.64	2.80
550	24.4	27.1	30.1	33.9	37.6	41.3	44.9	48.5	52.0	56.2	60.3	68.3	.26	.70	1.22	1.67	2.02	2.37	2.67	2.90	3.08
600	26.2	29.1	32.4	36.4	40.4	44.3	48.2	52.0	55.8	60.2	64.6	73.0	.28	.77	1.34	1.82	2.21	2.58	2.91	3.17	3.36
650	28.0	31.0	34.5	38.8	43.1	47.2	51.4	55.4	59.4	64.1	68.7	77.5	.31	.83	1.45	1.97	2.39	2.80	3.15	3.43	3.64
700	29.7	32.9	36.6	41.2	45.7	50.1	54.4	58.7	62.9	67.8	72.6	81.7	.33	.89	1.56	2.12	2.57	3.01	3.39	3.70	3.92
750	31.3	34.7	38.7	43.5	48.2	52.8	57.4	61.8	66.2	71.3	76.2	85.6	.35	.96	1.67	2.27	2.76	3.23	3.63	3.96	4.20
800	32.9	36.5	40.6	45.7	50.6	55.4	60.2	64.8	69.3	74.6	79.6	89.3	.38	1.02	1.78	2.43	2.94	3.44	3.88	4.22	4.48
850	34.4	38.2	42.5	47.8	52.9	57.9	62.8	67.6	72.3	77.6	82.8	92.5	.40	1.09	1.89	2.58	3.13	3.66	4.12	4.49	4.76
900	35.9	39.8	44.3	49.8	55.1	60.3	65.4	70.3	75.0	80.5	85.8	95.5	.42	1.15	2.00	2.73	3.31	3.87	4.36	4.75	5.04
950	37.3	41.4	46.0	51.7	57.2	62.6	67.7	72.8	77.6	83.1	88.4	98.1	.45	1.21	2.11	2.88	3.49	4.09	4.60	5.02	5.32
1000	38.7	42.9	47.7	53.5	59.2	64.7	70.0	75.1	80.0	85.6	90.8	100.3	.47	1.28	2.23	3.03	3.68	4.30	4.85	5.28	5.60
1050	39.9	44.4	49.3	55.3	61.1	66.7	72.1	77.2	82.1	87.7	92.9	102.2	.49	1.34	2.34	3.18	3.86	4.52	5.09	5.54	5.88
1100	41.2	45.7	50.8	56.9	62.9	68.5	74.0	79.2	84.1	89.6	94.7	103.6	.52	1.41	2.45	3.33	4.05	4.73	5.33	5.81	6.16
1150	42.3	47.0	52.2	58.5	64.5	70.2	75.7	80.9	85.9	91.2	96.2	104.6	.54	1.47	2.56	3.49	4.23	4.95	5.57	6.07	6.44
1200	43.5	48.2	53.5	59.9	65.0	71.8	77.3	82.5	87.3	92.6	97.4	105.2	.56	1.53	2.67	3.64	4.41	5.17	5.82	6.34	6.71
1250	44.5	49.4	54.8	61.2	67.4	73.2	78.7	83.8	88.5	93.7	98.2	105.4	.59	1.60	2.78	3.79	4.60	5.38	6.06	6.60	6.99
1300	45.5	50.4	55.9	62.5	68.7	74.5	79.9	84.9	89.5	94.5	98.7	105.1	.61	1.66	2.89	3.94	4.78	5.60	6.30	6.86	7.27
1350	46.4	51.4	57.0	63.6	69.8	75.6	80.9	85.8	90.3	94.9	98.8	104.3	.63	1.73	3.01	4.09	4.97	5.81	6.54	7.13	7.55
1400	47.2	52.3	57.9	64.5	70.8	76.5	81.7	86.5	90.7	95.1	98.6	102.9	.66	1.79	3.12	4.24	5.15	6.03	6.78	7.39	7.83
1450	48.0	53.1	58.8	65.4	71.6	77.2	82.4	86.9	90.9	94.9	98.0	101.1	.68	1.85	3.23	4.40	5.33	6.24	7.03	7.66	8.11
1500	48.7	53.9	59.5	66.2	72.3	77.8	82.8	87.1	90.8	94.4	97.0	98.8	.70	1.92	3.34	4.55	5.52	6.46	7.27	7.92	8.39
1550	49.3	54.5	60.2	66.8	72.8	78.2	83.0	87.1	90.5	93.6	95.5	95.9	.73	1.98	3.45	4.70	5.70	6.67	7.51	8.18	8.67
1600	49.8	55.1	60.7	67.2	73.2	78.4	82.9	86.7	89.8	92.3	93.7	...	.75	2.05	3.56	4.85	5.88	6.89	7.75	8.45	8.95
1650	50.2	55.5	61.1	67.6	73.4	78.4	82.7	86.2	88.8	90.8	91.4	...	.77	2.11	3.67	5.00	6.07	7.10	8.00	8.71	9.23
1700	50.6	55.9	61.5	67.8	73.4	78.2	82.2	85.3	87.5	88.8	88.7	...	.80	2.17	3.78	5.15	6.25	7.32	8.24	8.98	9.51
1800	51.2	56.3	61.7	67.8	73.0	77.2	80.5	82.7	83.9	83.7	...	...	.84	2.30	4.01	5.46	6.62	7.75	8.72	9.5	10.1
1900	51.2	56.3	61.5	67.2	71.8	75.4	77.8	79.0	78.9	...	...	...	.89	2.43	4.23	5.76	6.99	8.18	9.21	10.0	10.6
2000	51.0	55.9	60.8	65.9	69.9	72.6	74.0	74.0	...	...	...	...	.94	2.56	4.45	6.06	7.36	8.61	9.69	10.6	11.2
2200	49.4	53.7	57.7	61.5	63.7	64.2	...	...	...	...	...	...	1.03	2.81	4.90	6.67	8.09	9.47	10.7	11.6	12.3
2400	46.0	49.5	52.4	54.2	54.1	...	...	...	...	...	...	...	1.13	3.07	5.34	7.28	8.83	10.3	11.6	12.7	13.4
2600	40.9	43.2	44.5	...	...	...	...	...	...	...	...	...	1.22	3.32	5.79	7.88	9.56	11.2	12.6	13.7	14.5

Shaded areas indicate rim speeds exceeding 6500 FPM which may require higher strength sheaves.
TOTAL RATING = rated HP + "additional HP" from right hand column.
‡ Additional HP below 1.02 ratio equals zero.
Δ Subject to Arc and Length Corrections Factors on page PT7-47.

NOTE: Selection program VIA-VISA available at www.ptwizard.com.

DODGE®

5VF BASIC HORSEPOWER RATINGS Δ
Aramide Cord Belt

SEE CAUTION BELOW

Faster Shaft RPM	Rated HP per Belt for Small Sheave O.D. of: 7.1	8.0	8.5	9.0	9.75	10.3	10.9	11.3	11.8	12.5	13.2	14.0	15.0	16.0	Additional HP per Belt for Speed Ratio of:‡ 1.02 to 1.20	1.21 to 1.50	1.51 to 2.19	2.20 to 3.32	3.33 and up
200	3.55	4.42	4.91	5.39	6.11	6.63	7.2	7.58	8.05	8.71	9.36	10.1	11.0	11.9	.10	.24	.33	.37	.38
300	5.01	6.29	6.99	7.69	8.74	9.5	10.3	10.9	11.5	12.5	13.5	14.5	15.9	17.2	.15	.36	.50	.55	.57
400	6.39	8.05	8.97	9.88	11.2	12.2	13.3	14.0	14.9	16.1	17.4	18.8	20.5	22.2	.19	.47	.66	.74	.76
500	7.71	9.74	10.9	12.0	13.6	14.8	16.2	17.0	18.1	19.6	21.1	22.8	24.9	27.0	.24	.59	.83	.92	.94
600	8.96	11.4	12.7	14.0	15.9	17.4	18.9	19.9	21.2	23.0	24.8	26.7	29.2	31.7	.29	.71	.99	1.11	1.13
700	10.2	12.9	14.4	15.9	18.2	19.8	21.6	22.8	24.2	26.3	28.3	30.5	33.3	36.1	.34	.83	1.16	1.29	1.32
800	11.3	14.4	16.1	17.8	20.4	22.2	24.2	25.5	27.1	29.4	31.6	34.2	37.3	40.4	.39	.95	1.32	1.48	1.51
900	12.4	15.9	17.8	19.7	22.5	24.5	26.7	28.2	29.9	32.4	34.9	37.7	41.1	44.5	.44	1.07	1.49	1.66	1.70
1000	13.5	17.3	19.4	21.5	24.5	26.7	29.1	30.7	32.7	35.4	38.0	41.1	44.8	48.4	.49	1.18	1.65	1.85	1.89
1100	14.6	18.7	20.9	23.2	26.5	28.9	31.5	33.2	35.3	38.2	41.1	44.3	48.2	52.1	.53	1.30	1.82	2.03	2.08
1200	15.6	20.0	22.4	24.8	28.4	30.9	33.7	35.5	37.8	40.9	43.9	47.4	51.5	55.6	.58	1.42	1.99	2.22	2.27
1300	16.6	21.3	23.9	26.4	30.2	32.9	35.9	37.8	40.2	43.5	46.7	50.3	54.7	58.9	.63	1.54	2.15	2.40	2.45
1400	17.5	22.5	25.3	28.0	32.0	34.9	37.9	40.0	42.5	45.9	49.3	53.0	57.6	61.9	.68	1.66	2.32	2.59	2.64
1600	19.3	24.9	27.9	30.9	35.3	38.5	41.8	44.1	46.8	50.5	54.1	58.1	62.8	67.3	.78	1.89	2.65	2.96	3.02
1800	20.9	27.0	30.3	33.6	38.4	41.7	45.4	47.7	50.6	54.5	58.2	62.3	67.2	71.6	.88	2.13	2.98	3.32	3.40
2000	22.4	29.0	32.6	36.0	41.1	44.7	48.5	50.9	53.9	57.9	61.7	65.8	70.5	74.8	.97	2.37	3.31	3.69	3.78
2200	23.8	30.8	34.5	38.2	43.5	47.2	51.2	53.7	56.7	60.7	64.5	68.5	72.9	76.7	1.07	2.60	3.64	4.06	4.15
2400	24.9	32.4	36.3	40.1	45.6	49.4	53.4	55.9	58.9	62.8	65.5	70.2	74.1	77.3	1.17	2.84	3.97	4.43	4.53
2600	26.0	33.7	37.8	41.7	47.3	51.1	55.1	57.6	60.5	64.3	67.6	70.9	...	...	1.26	3.08	4.30	4.80	4.91
2800	26.9	34.8	39.0	43.0	48.6	52.4	56.3	58.7	61.4	64.9	67.8	...	...	...	1.36	3.31	4.63	5.17	5.29
3000	27.6	35.8	40.0	44.0	49.6	53.3	56.9	59.2	61.7	64.7	...	...	...	...	1.46	3.55	4.96	5.54	5.66
3200	28.1	36.4	40.7	44.6	50.1	53.6	57.0	59.0	61.2	...	...	...	...	...	1.56	3.79	5.30	5.91	6.04
3400	28.4	36.8	41.0	44.9	50.1	53.4	56.5	58.2	...	...	...	...	...	...	1.65	4.02	5.63	6.28	6.42
3600	28.6	36.9	41.1	44.8	49.7	52.7	...	...	...	...	...	...	...	...	1.75	4.26	5.96	6.65	6.80

8VF

SEE CAUTION BELOW

Faster Shaft RPM	Rated HP per Belt for Small Sheave O.D. of: 12.5	13.2	14.0	15.0	16.0	17.0	18.0	19.0	20.0	21.2	22.4	24.8	Additional HP per Belt for Speed Ratio of:‡ 1.02 to 1.20	1.21 to 1.50	1.51 to 2.19	2.20 to 3.32	3.33 and up
200	12.6	14.5	16.6	19.3	21.9	24.6	27.2	29.8	32.433	35.5	38.6	44.7	.59	1.43	2.00	2.24	2.29
250	15.0	17.4	20.0	23.3	26.5	29.7	33.0	36.2	39.4	43.2	46.9	54.5	.74	1.79	2.51	2.80	2.86
300	17.4	20.1	23.2	27.1	30.9	34.7	38.5	42.3	46.1	50.5	55.0	63.8	.88	2.15	3.01	3.36	3.43
350	19.6	22.7	26.3	30.7	35.2	39.6	43.9	48.3	52.6	57.7	62.8	72.9	1.03	2.51	3.51	3.91	4.00
400	21.7	25.2	29.3	34.3	39.3	44.2	49.1	54.0	58.9	64.6	70.4	81.7	1.18	2.87	4.01	4.47	4.57
450	23.7	27.7	32.2	37.7	43.2	48.7	54.2	59.6	65.0	71.4	77.7	90.2	1.33	3.23	4.51	5.03	5.15
500	25.6	30.0	34.9	41.0	47.1	53.1	59.1	65.0	70.9	77.8	84.8	98.4	1.47	3.58	5.01	5.59	5.72
600	29.3	34.4	40.1	47.3	54.4	61.4	68.4	75.3	82.2	90.2	98.2	113.9	1.77	4.30	6.01	6.71	6.86
700	32.6	38.4	45.0	51.2	61.2	69.2	77.1	84.9	92.6	101.7	110.7	128.1	2.06	5.02	7.01	7.83	8.00
800	35.6	42.1	49.5	58.6	67.6	76.5	85.2	93.8	102.3	112.3	122.1	141.1	2.36	5.73	8.02	8.95	9.15
900	38.3	45.5	53.6	63.6	73.5	83.1	92.7	102.0	111.2	121.9	132.4	152.5	2.65	6.45	9.02	10.1	10.3
1000	40.7	48.5	57.4	68.2	78.8	89.2	99.4	109.4	119.1	130.5	141.5	162.4	2.95	7.17	10.0	11.2	11.4
1100	42.9	51.3	60.7	72.3	83.6	94.7	105.5	116.0	126.2	138.0	149.4	170.7	3.24	7.89	11.0	12.3	12.6
1200	44.7	53.7	63.7	75.9	87.9	99.5	110.8	121.7	132.2	144.4	155.9	177.3	3.53	8.60	12.0	13.4	13.7
1300	46.2	55.7	66.3	79.2	91.6	103.7	115.3	126.5	137.3	149.5	161.1	181.9	3.83	9.32	13.1	14.5	14.8
1400	47.4	57.3	68.4	81.8	94.7	107.1	119.0	130.4	141.2	153.4	164.7	184.5	4.12	10.1	14.1	15.7	16.0
1500	48.3	58.6	70.1	83.9	97.1	109.8	121.8	133.2	143.9	155.8	165.7	184.9	4.42	10.7	15.0	16.8	17.1
1600	48.8	59.5	71.3	85.4	98.9	111.7	123.7	135.0	145.4	156.8	167.0	...	4.71	11.5	16.0	17.9	18.3
1700	49.0	59.0	72.0	86.4	100.0	112.8	124.7	135.7	145.6	156.3	165.5	...	5.01	12.2	17.0	19.0	19.4
1800	48.8	60.0	72.2	86.8	100.4	113.0	124.6	135.1	144.5	154.2	...	...	5.30	12.9	18.0	20.1	20.6
1900	48.2	59.5	71.9	86.5	100.0	112.4	123.5	133.4	141.9	...	...	...	5.60	13.6	19.0	21.2	21.7
2000	47.2	58.7	71.1	85.6	98.8	110.7	121.3	130.3	...	...	...	...	5.89	14.3	20.0	22.3	22.8
2100	45.8	57.3	69.7	84.0	96.8	108.1	117.9		...	...	...	...	6.19	15.0	21.0	23.5	24.0
2200	43.9	55.5	67.7	81.7	94.0	104.5	...	...	...	...	...	...	6.48	15.8	22.0	24.6	25.1

Shaded areas indicate rim speeds exceeding 6500 FPM which may require higher strength sheaves.

Δ Subject to Arc and Length Corrections Factors on page PT7-47.

TOTAL RATING = rated HP + "additional HP" from right hand column.

‡ Additional HP below 1.02 ratio equals zero.

CAUTION: Belt horsepower ratings may exceed design capacity of stock sheaves. Consult factory for recommendations.

NOTE: Selection program VIA-VISA available at www.ptwizard.com.

SELECTION

Stock Classical Drives: Standard Motor Speeds

Step 1 - Determine Service Factor. Refer to Typical Service factors, Table 7. Locate type of Driven and Driver equipment. (If an idler is used, increase the factor by value indicated). Correct factor is determined by: 1. The extent and frequency of peak loads. 2. Number of operating hours/year, broken down in average hours/day of continuous service. 3. Proper service category: (Intermittent, Normal or Continuous). Select the one closest to the application conditions.

Step 2 - Compute Design HP. Multiply normal running HP required or nameplate rating by service factor obtained in Step 1.

Step 3 - Choose Belt Section. Using Table 6, below, read up from design HP figure obtained in Step 2 and over from the RPM of faster shaft. This intersection indicates belt sections.

Step 4 - Select the Drive. a). Using belt section from Step 3, refer to Stock Drive Selection Tables beginning on page PT7-90. **b).** Under appropriate driver speed column find Driven RPM nearest to the desired speed. To the right note HP per Belt. Read left for Driver/Driven Sheave information. (If driver is an electric motor be sure motor sheave diameter is not less than shown in Table 8.) **c)**. Read onto opposite page and find figure nearest the required center distance. Note Arc-Length Correction Factor in the shaded row below the C.D. figure. d). Read to the top of the table for the belt size. **e). To determine number of belts**, multiply the HP per Belt value by the Arc Length Correction Factor. This is the corrected HP/ belt. Divide design HP by corrected HP figure to determine number of belts required.

EXAMPLE OF SELECTION

Select a classical drive for a continuous duty 3-piston compressor, with a 2-7/16, shaft, to run at about 284 RPM, driven by a 30 HP, 1160 RPM squirrel cage electric motor with a 2-1/8, shaft. Desired center distance is approximately 36”.

Step 1 - Service factor from Table 7 is 1.4.

Step 2 - Design HP = 1.4 x 30 = 42 HP.

Step 3 - A C-section belt is shown in Table 11 when reading to the right of 1160 RPM and up from 42 design HP.

Step 4 - Turn to C-Stock Drive Selection Tables beginning on page PT7-124. Under 1160 RPM Driven, read down to find 285 RPM. One selection is 284 on page PT7-128. Note HP/belt as 15.47 for all SL Classic belts and Polyband belts over 116” and 19.34 for all Classic-Cog and Polyband under 116”. Also note sheaves listed as a 8.5 Driver, 36.0 Driven. Table 8 shows driver is not undersize. Reading to opposite page the C.D. figure of 35.9 is closest to 36”. Top of table shows belt size as C144.

The HP/belt for SL Classic is 15.47. This value x the .95 factor = 14.7 corrected HP/belt. 42 HP÷14.7 = 2.85. Going to the next whole number the drive requires 3 SL Classic belts. (Center to center operating distance is 35.9 nominal.) **Order:** 1. 3 - C144 SL Classic Belts. 2. 1 - 3-groove C8.5 TAPER-LOCK Sheave. 3. 1 - 2-1/8, bore 2517 bushing.
4. 1 - 3-groove C36.0 TAPER-LOCK Sheave. 5. 1 - 2-7/16, bore 3535 bushing.

(The steps above may be used to figure a Classic-COG drive with higher HP ratings. This drive usually uses fewer grooves and will be more compact. The decision to use SL Classic, Classic-COG or POLYBAND belts involves economics, interchangeability, etc.).

Table 6 - Narrow Cross Section Selection Chart

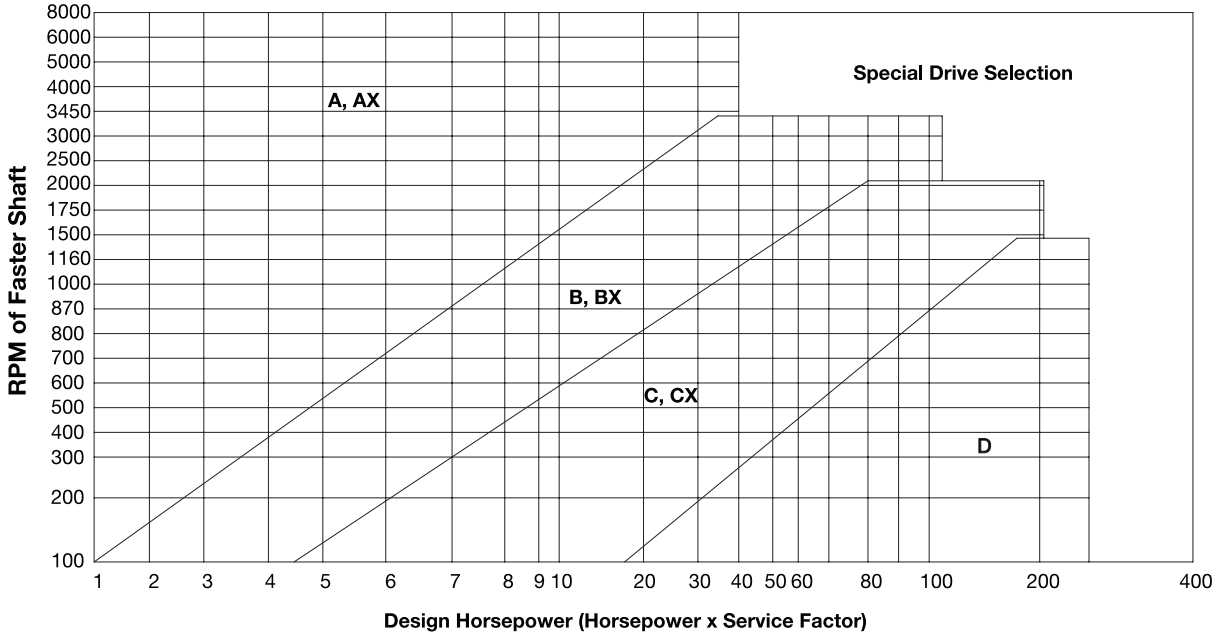

NOTE: Selection program VIA-VISA available at www.ptwizard.com.

SERVICE FACTORS

Table 7 - Typical Service Factors

Driven Machine Types Note: Certain machines may require flywheel sheaves or special construction to withstand heavy shock loads. Consult Mfg'r.	Driver: Normal Torque NEMA Des. A or B Motors DC Shunt Wound Motors Multi-Cylinder Engines Service*			Driver: High Torque NEMA Des. C or D Motors DC Series Wound Motors Single Cylinder Engines Service*			
	Intermit.	Normal	Contin.	Intermit.	Normal	Cont.	
Agitators for Liquids Blowers and Exhausters Centrif. Pumps, Compressors Fans up to 10HP Light Duty Conveyors	1.0	1.1	1.2	1.1	1.2	1.3	* Note: Intermittent: Up to 6 Hrs./Day Normal: 6-16 Hrs./Day Continuous: 16-24 Hrs./Day Adder for Idlers: Outside on slack side . . . . . 0.1 Inside on tight side . . . . . 0.1 Outside on tight side 0.2
Belt Conveyors, Bulk Mat'l Dough Mixers Fans over 10 HP Generators Line Shafts Laundry Machinery Machine Tools Punches, Presses, Shears Printing Machinery Positive Displ. Rotary Pumps Revolving & Vibrating Screens	1.1	1.2	1.3	1.2	1.3	1.4	
Brick Machinery Bucket Elevators Exciters Piston Compressors Conveyors: Drag, Pan, Screw Hammer Mills Paper Mill Beaters Piston Pumps Pos. Displacement Blowers Pulverizers Saw Mill, Woodworking Mach'y Textile Machinery	1.2	1.3	1.4	1.4	1.5	1.6	
Crushers: Gyratory, Jaw, Roll Mills: Ball, Rod, Tube Hoists Rubber Calendars, Extruders, Mills	1.3	1.4	1.5	1.6	1.7	1.8	
Chokable Equipment, Fire Hazard	2.0	2.0	2.0	2.0	2.0	2.0	

Table 8 - Min. Recommended Classical Groove Sheave Dia. for Drives Using Electric Motors

Motor RPM	A, B. C. D, V-belt Sheave	Motor Horsepower																		
		1/2	3/4	1	1-1/2	2	3	5	7-1/2	10	15	20	25	30	40	50	60	75	100	125
870	Min. P.D.	2.2	2.4	2.4	2.4	3.0	3.0	3.8	4.4	4.6	5.4	6.0	6.8	6.8	8.2	9.0	10.0	10.5	12.5	. . .
	Max. Face Width	4.3	4.3	5.3	5.3	6.5	6.5	7.8	7.8	9.0	9.0	10.3	10.3	11.5	11.5	14.3	14.3	16.8	16.8	. . .
1160	Min. P.D.	. . .	2.2	2.4	2.4	2.4	3.0	3.0	3.8	4.4	4.6	5.4	6.0	6.8	6.8	8.2	9.0	10.0	11.0	12.5
	Max. Face Width	. . .	4.3	4.3	5.3	5.3	6.5	6.5	7.8	7.8	9.0	9.0	10.3	10.3	11.5	11.5	14.3	14.3	16.8	16.8
1750	Min. P.D.	. . .	. . .	2.2	2.4	2.4	2.4	3.0	3.0	3.8	4.4	4.6	5.0	5.4	6.0	6.8	7.4	9.0	10.0	11.5
	Max. Face Width	. . .	. . .	4.3	4.3	4.3	5.3	5.3	6.5	6.5	7.8	7.8	9.0	9.0	10.3	10.3	11.5	11.5	14.3	14.3
3500	Min. P.D.	. . .	. . .	. . .	2.2	2.4	2.4	3.0	3.8	3.0	3.8	4.4	4.4	. . .	. . .	. . .	. . .	. . .	. . .	. . .
	Max. Face Width	. . .	. . .	. . .	4.3	4.3	4.3	5.3	5.3	6.5	6.5	7.8	7.8	. . .	. . .	. . .	. . .	. . .	. . .	. . .

Data is per NEMA Standard MG1-14.42. In areas where sheaves are not listed, consult motor manufacturer

NOTE: Selection program VIA-VISA available at www.ptwizard.com.

SELECTION

Stock Classical Drives: Non Standard Motor Speeds & Speed-Up Drives

For Speeds Other Than Standard Motor Speeds:

Step 1 - Determine Speed Ratio = $\left(\frac{\text{Driver RPM}}{\text{Driven RPM}}\right)$

Step 2 - Compute Design HP. Multiply normal running HP required or nameplate rating by service factor from Table 2.

Step 3 - Determine Maximum Diameter of Driver Sheave

@ 6500 FPM: O.D. = $\left(\frac{6500 \text{ RPM}}{.262 \times \text{RPM}}\right)$

Step 4 - Select Belt Cross Section. Using Table 6, read up from design HP figure obtained in Step 2 and over from the RPM of faster shaft. This intersection indicates belt section.

Step 5 - Select Drive. Using the belt section from Step 4, make a tentative sheave selection from **Stock Drive Selection Tables**. (Note that several choices are available in the ratio obtained from Step 1.) Other choices close to this ratio may also produce a functional drive. Read onto opposite page and find figure nearest the required center distance. The Arc-Length Correction Factor is listed in the shaded row below the C.D. figure. Read to the top of the table for the belt size.

Step 6 - Size the Drive. From Basic HP Tables beginning on page PT7-118, locate HP rating at intersection of RPM row and small sheave column. To this, add the "additional HP" figure based on drive ratio. This becomes the rated HP. Multiply this sum by the arc-length correction factor noted in Step 5. This becomes the corrected HP per belt. To find

Required number of belts : $\frac{\text{Design HP}}{\text{Correction HP/Belt}}$

EXAMPLE OF SELECTION

A V-drive is needed for a 15 HP, 2200 RPM gasoline engine, with a 1-5/8" shaft, running a reducer on a belt conveyor. 2-5/16" reducer input shaft shaft runs at 1490 RPM. Service is intermittent. Center distance is 36".

Step 1 - Speed Ratio = $\frac{2200}{1785}$ = 1.48

Step 2 - Service Factor = 1.2 Design HP = 15 x 1.1 = 16.5

Step 3 - Driver Sheave Max. Dia. = $\frac{6500}{.262 \times 2200}$ = 11.3

Step 4 - Belt Cross Section = Table 11 indicates A-AX.

Step 5 - Turn to A, AX **Stock Drive Selection Tables** beginning on page PT7-106. Find the 1.48 ratio obtained in the Step 1 calculations. The most economical drive shows a 4.6 Driver, 7.0 Driven Sheave. The C.D. nearest 36" is 36.5. The correction factor below the C.D. figure is 1.07. Top of the table shows an A90 belt. Refer to Basic HP Tables on page PT7-134. From the 2200 RPM of the faster shaft row and down from the 4.6 smaller sheave:
5.80 HP/belt plus an additional HP of .44 in the 1.35 thru 1.99 ratio column. The sum = 6.24 HP/belt x 1.07 arc-length correction factor = 6.68 HP/belt.

Number of belts = $\frac{16.5}{6.68}$ = 2.47 or 3 belts

Order: 1- 3 groove A4.6 TAPER-LOCK Sheave, 1 to 1-5/8" bore 1610 bushing, 1-3 groove A7.0 sheave, 1 to 2-5/16" bore 2517 bushing, 3-A90 SL Classic Belts.

Example of an "A" Speed-Up Drive

A 10 HP 1750 RPM AC motor, with a 1-3/8" shaft is to drive a high speed blower @ 4000 RPM. The blower shaft is 1-7/16", center distance 24" and equipment runs 24 hrs./day.

1. Service Factor from Table 12 is 1.2.
2. Design HP = 10 x 1.2 = 12 HP.
3. Speed Ratio = $\frac{4000}{1750}$ = 2.29
4. In Stock Drive Table, under 2.29 ratio, sheaves are listed as 3.4 Driver/8.2 Driven. (In a speed-up drive, the 3.4 sheave becomes the Driven, the 8.2 the Driver.) The opposite page of the table shows the closest center distance as 24.4 with an arc length correction factor of .96. Belt shown at top of table is A66.
5. From **Basic Horsepower Tables** a 3.4 sheave @ 4000 RPM = (4.38 + 1.00) = 5.38.
   5.38 x .96 = 5.16 corrected HP/belt.
6. **Number of Belts** = $\frac{\text{Design HP}}{\text{Corrected HP}} = \frac{12}{5.16}$ = 2.33
   or 3 belts.
7. **Order:** 1-3 groove A8.2 TAPER-LOCK Sheave, 1 to 1-3/8" bore 2517 bushing, 1-3 groove A3.4 TAPER-LOCK Sheave, 1 to 1-7/16" bore 1610 bushing, 3-A66 SL belts.

NOTE: To determine required belt length when center distance and sheave datum diameters are known, use the following formula.

$$L = 2C + 1.57\,(D + d) + \frac{(D - d)^2}{4c}$$

L = Belt Length In Inches

C = Center Distance

D = Datum Dia. of Large Sheave

d = Datum Dia. of Small Sheave

NOTE: Selection program VIA-VISA available at www.ptwizard.com.

Belt Correction Factors

Table 9 - Classical Belt Length Correction Factors

Datum Length	Factor	Datum Length	Factor	Datum Length	Factor	Datum Length	Factor	Datum Length	Factor	Datum Length	Factor	Datum Length	Factor
A Belts		A Belts (Cont.)		A Belts (Cont.)		B Belts (Cont.)		B Belts (Cont.)		C Belts (Cont.)		D Belts (Cont.)	
15.3	0.68	58.3	0.96	113.3	1.11	57.8	0.90	101.8	1.03	107.9	0.94	213.3	0.96
16.3	0.69	59.3	0.97	121.3	1.13	58.8	0.90	102.8	1.03	108.9	0.94	225.8	0.99
17.3	0.71	60.3	0.97	129.3	1.14	59.8	0.91	104.8	1.04	110.9	0.94	240.8	1.00
18.3	0.72	61.3	0.98	134.3	1.14	60.8	0.91	106.8	1.04	111.9	0.94	255.8	1.01
19.3	0.73	62.3	0.98	137.3	1.15	61.8	0.92	109.8	1.04	113.9	0.94	270.8	1.03
20.3	0.74	63.3	0.98	145.3	1.17	62.8	0.92	112.8	1.05	114.9	0.95	285.8	1.04
21.3	0.75	64.3	0.98	159.3	1.19	63.8	0.92	113.8	1.05	117.9	0.95	300.8	1.05
22.3	0.76	65.3	0.99	174.3	1.21	64.8	0.92	117.8	1.06	122.9	0.97	315.8	1.06
23.3	0.77	67.3	0.99	181.3	1.22	65.8	0.93	121.8	1.07	126.9	0.97	330.8	1.07
24.3	0.78	68.3	0.99	B Belts		66.8	0.93	125.8	1.07	130.9	0.98	345.8	1.08
25.3	0.79	69.3	1.00	23.8	0.71	67.8	0.93	129.8	1.08	138.9	0.99	360.8	1.09
26.3	0.80	70.3	1.00	24.8	0.72	68.8	0.94	134.8	1.09	146.9	1.00	390.8	1.11
27.3	0.81	71.3	1.00	25.8	0.73	69.8	0.95	137.8	1.09	152.9	1.01	420.8	1.12
28.3	0.81	72.3	1.01	26.8	0.74	70.8	0.95	145.8	1.11	160.9	1.02	450.8	1.14
29.3	0.82	73.3	1.01	27.8	0.75	71.8	0.95	149.8	1.11	164.9	1.03	480.8	1.16
30.3	0.82	74.3	1.01	28.8	0.75	72.8	0.95	159.8	1.13	175.9	1.04	540.8	1.18
31.3	0.83	75.3	1.02	29.8	0.76	73.8	0.95	163.8	1.13	182.9	1.05	600.8	1.20
32.3	0.84	76.3	1.02	30.8	0.77	74.8	0.96	174.8	1.15	197.9	1.07	E Belts #	
33.3	0.84	77.3	1.02	31.8	0.77	75.8	0.96	181.8	1.16	212.9	1.08	184.5	0.91
34.3	0.85	78.3	1.02	32.8	0.78	76.8	0.97	191.8	1.16	225.9	1.10	199.5	0.92
35.3	0.86	79.3	1.03	33.8	0.79	77.8	0.97	196.8	1.18	240.9	1.11	214.5	0.94
36.3	0.87	80.3	1.03	34.8	0.79	78.8	0.97	206.8	1.19	255.9	1.12	241.0	0.96
37.3	0.87	81.3	1.04	35.8	0.80	79.8	0.97	211.8	1.19	270.9	1.14	271.0	0.99
38.3	0.87	82.3	1.04	36.8	0.81	80.8	0.97	225.3	1.21	285.9	1.15	301.0	1.01
39.3	0.88	83.3	1.04	37.8	0.81	81.8	0.97	240.3	1.22	300.9	1.16	331.0	1.03
40.3	0.89	84.3	1.04	38.8	0.82	82.8	0.98	255.3	1.24	315.9	1.18	361.0	1.05
41.3	0.89	85.3	1.05	39.8	0.83	83.8	0.98	270.3	1.25	330.9	1.19	391.0	1.07
42.3	0.90	86.3	1.05	40.8	0.83	84.8	0.98	285.3	1.26	345.9	1.20	421.0	1.09
42.3	0.90	87.3	1.05	41.8	0.83	85.8	0.99	300.3	1.27	360.9	1.21	481.0	1.12
43.3	0.91	88.3	1.05	42.8	0.84	86.8	0.99	315.3	1.29	390.9	1.23	541.0	1.14
44.3	0.91	89.3	1.06	43.8	0.85	87.8	0.99	C Belts		420.9	1.24	601.0	1.17
45.3	0.92	90.3	1.06	44.8	0.85	88.8	0.99	53.9	0.80	450.9	1.26	....	....
46.3	0.92	91.3	1.06	45.8	0.85	89.8	1.00	57.9	0.81	480.9	1.27	....	....
47.3	0.93	92.3	1.06	46.8	0.86	90.8	1.00	62.9	0.82	D Belts		....	....
48.3	0.93	93.3	1.07	47.8	0.87	91.8	1.00	70.9	0.85	108.3	0.83	....	....
49.3	0.93	94.3	1.07	48.8	0.87	92.8	1.00	73.9	0.87	115.3	0.84	....	....
50.3	0.94	95.3	1.07	49.8	0.87	93.8	1.00	77.9	0.89	123.3	0.86	....	....
51.3	0.94	96.3	1.07	50.8	0.88	94.8	1.01	83.9	0.90	131.3	0.87	....	....
52.3	0.95	97.3	1.08	51.8	0.88	95.8	1.01	87.9	0.91	147.3	0.90	....	....
53.3	0.95	98.3	1.08	52.8	0.89	96.8	1.01	92.9	0.92	161.3	0.92	....	....
54.3	0.96	99.3	1.08	53.8	0.89	97.8	1.01	98.9	0.92	165.3	0.92	....	....
55.3	0.96	101.3	1.08	54.8	0.89	98.8	1.02	99.9	0.92	176.3	0.93	....	....
56.6	0.96	106.3	1.10	55.8	0.89	99.8	1.02	101.9	0.92	183.3	0.94	....	....
57.3	0.96	111.3	1.11	56.8	0.90	100.8	1.02	103.9	0.94	198.3	0.96	....	....

E Belts recommended for replacement only, not for new drive design

Table 10 - Arc Correction Factors

D-d‡ / C	Approx. Arc of Contact on Small Shv.	Factor	D-d‡ / C	Approx. Arc of Contact on Small Shv.	Factor
.00	180°	1.00	.80	133°	.87
.10	174°	.99	.90	127°	.85
.20	169°	.97	1.00	120°	.82
.30	163°	.96	1.10	113°	.80
.40	157°	.94	1.20	106°	.77
.50	151°	.93	1.30	99°	.73
.60	145°	.91	1.40	91°	.70
.70	139°	.89	1.50	83°	.65

‡ D = Dia. of large sheave.
d = Dia. of small sheave.
C = Center distance

NOTE: Selection program VIA-VISA available at www.ptwizard.com.

SELECTION

DODGE®

A	S-L CLASSIC

AX	CLASSIC COG

STOCK DRIVE SELECTIONS

Ratio	Stock Shv. Datum Diam.		3500 RPM Driver			1750 RPM Driver			1160 RPM Driver			Belt Size/Center Distance						
			Driven	HP Per Belt		Driven	HP Per Belt		Driven	HP Per Belt		A26	A31	A33	A35	A38	A42	A46
	Driver	Driven	RPM	A	AX	RPM	A	AX	RPM	A	AX	AX26	AX31	AX33	AX35	AX38	AX42	AX46
1.00	3.0	3.0	3500	3.42	4.61	1750	2.37	3.08	1160	1.78	2.33	8.9	11.4	12.4	13.4	14.9	16.9	18.9
1.00	3.4	3.4	3500	4.60	5.68	1750	3.09	3.72	1160	2.29	2.79	8.3	10.8	11.8	12.8	14.3	16.3	18.3
1.00	3.8	3.8	3500	5.72	6.70	1750	3.80	4.35	1160	2.79	3.24	7.7	10.2	11.2	12.2	13.7	15.7	17.7
1.00	4.2	4.2	3500	6.77	7.68	1750	4.49	4.96	1160	3.29	3.69	7.1	9.6	10.6	11.6	13.1	15.1	17.1
1.00	4.6	4.6	3500	7.75	8.62	1750	5.16	5.56	1160	3.77	4.13	6.4	8.9	9.9	10.9	12.4	14.4	16.4
1.00	5.0	5.0	3500	8.66	9.52	1750	5.83	6.15	1160	4.25	4.56	---	8.3	9.3	10.3	11.8	13.8	15.8
1.00	5.2	5.2	3500	9.09	9.96	1750	6.15	6.44	1160	4.49	4.77	---	8.0	9.0	10.0	11.5	13.5	15.5
1.00	6.0	6.0	3500	10.60	11.59	1750	7.42	7.57	1160	5.43	5.60	---	---	7.7	8.7	10.2	12.2	14.2
1.00	7.0	7.0	3500	---	---	1750	8.92	8.92	1160	6.56	6.61	---	---	---	---	8.7	10.7	12.7
1.03	5.6	5.8	3387	10.02	10.93	1693	6.86	7.08	1122	5.01	5.23	---	7.2	8.2	9.2	10.7	12.7	14.7
1.04	5.0	5.2	3375	8.81	9.67	1687	5.90	6.23	1118	4.30	4.60	5.6	8.1	9.1	10.1	11.6	13.6	15.6
1.04	4.2	4.4	3354	6.94	7.85	1677	4.57	5.05	1111	3.34	3.75	6.9	9.4	10.4	11.4	12.9	14.9	16.9
1.05	3.6	3.8	3333	5.36	6.39	1666	3.54	4.13	1104	2.61	3.08	7.8	10.3	11.3	12.3	13.8	15.8	17.8
1.06	3.0	3.2	3304	3.64	4.83	1652	2.48	3.19	1095	1.86	2.40	8.8	11.3	12.3	13.3	14.8	16.8	18.8
1.06	6.0	6.4	3294	10.83	11.82	1647	7.54	7.69	1092	5.50	5.68	---	6.4	7.4	8.4	9.9	11.9	13.9
1.07	5.2	5.6	3266	9.35	10.22	1633	6.28	6.57	1082	4.58	4.85	---	7.7	8.7	9.7	11.2	13.2	15.2
1.08	4.6	5.0	3240	8.04	8.91	1620	5.31	5.71	1074	3.87	4.22	6.1	8.6	9.6	10.6	12.1	14.1	16.1
1.09	4.0	4.4	3207	6.57	7.51	1604	4.30	4.82	1063	3.14	3.57	7.1	9.6	10.6	11.6	13.1	15.1	17.1
1.09	6.0	6.6	3199	10.92	11.91	1600	7.58	7.73	1060	5.53	5.71	---	6.3	7.3	8.3	9.8	11.8	13.8
1.10	5.6	6.2	3181	10.23	11.13	1590	6.96	7.18	1054	5.07	5.30	---	6.9	7.9	8.9	10.4	12.4	14.4
1.10	3.6	4.0	3180	5.51	6.53	1590	3.61	4.21	1054	2.66	3.13	7.7	10.2	11.2	12.2	13.7	15.7	17.7
1.11	5.2	5.8	3160	9.45	10.31	1580	6.33	6.62	1047	4.61	4.89	---	7.5	8.5	9.5	11.0	13.0	15.0
1.11	3.2	3.6	3148	4.38	5.52	1574	2.92	3.59	1043	2.16	2.68	8.3	10.8	11.8	12.8	14.3	16.3	18.3
1.12	4.8	5.4	3137	8.60	9.46	1568	5.69	6.05	1040	4.14	4.47	5.6	8.1	9.1	10.1	11.6	13.6	15.6
1.12	3.0	3.4	3130	3.80	5.00	1565	2.56	3.27	1037	1.91	2.46	8.6	11.1	12.1	13.1	14.6	16.6	18.6
1.13	4.2	4.8	3095	7.18	8.10	1547	4.69	5.17	1026	3.42	3.83	6.6	9.1	10.1	11.1	12.6	14.6	16.6
1.13	5.6	6.4	3087	10.31	11.21	1544	7.00	7.22	1023	5.10	5.33	---	6.7	7.7	8.7	10.2	12.2	14.2
1.14	3.8	4.4	3061	6.16	7.14	1530	4.02	4.57	1014	2.94	3.39	7.2	9.7	10.7	11.7	13.2	15.2	17.2
1.15	5.0	5.8	3047	9.12	9.97	1523	6.05	6.38	1010	4.40	4.70	---	7.7	8.7	9.7	11.2	13.2	15.2
1.15	3.6	4.2	3041	5.62	6.65	1521	3.67	4.27	1008	2.69	3.17	7.5	10.0	11.0	12.0	13.5	15.5	17.5
				ARC-LENGTH CORRECTION FACTOR —>								**0.74**	**0.79**	**0.81**	**0.82**	**0.84**	**0.87**	**0.89**
1.16	6.0	7.0	3026	11.07	12.06	1513	7.65	7.80	1003	5.58	5.75	---	---	6.9	7.9	9.4	11.4	13.4
1.16	3.4	4.0	3021	5.07	6.15	1510	3.33	3.96	1001	2.45	2.95	7.8	10.3	11.3	12.3	13.8	15.8	17.8
1.16	4.6	5.4	3016	8.23	9.10	1508	5.40	5.80	999	3.93	4.28	5.8	8.3	9.3	10.3	11.8	13.8	15.8
1.17	3.2	3.8	2998	4.50	5.64	1499	2.98	3.65	993	2.20	2.72	8.1	10.7	11.7	12.7	14.2	16.2	18.2
1.18	3.0	3.6	2972	3.92	5.12	1486	2.62	3.34	985	1.95	2.50	8.5	11.0	12.0	13.0	14.5	16.5	18.5
1.18	4.0	4.8	2959	6.77	7.71	1480	4.40	4.92	981	3.21	3.64	6.7	9.2	10.2	11.2	12.7	14.7	16.7
1.19	5.0	6.0	2951	9.19	10.04	1476	6.09	6.41	978	4.43	4.73	---	7.5	8.5	9.5	11.0	13.0	15.0
1.19	3.8	4.6	2938	6.25	7.23	1469	4.06	4.62	974	2.97	3.42	7.0	9.5	10.5	11.5	13.0	15.1	17.1
1.21	3.4	4.2	2889	5.16	6.24	1444	3.37	4.01	957	2.48	2.98	7.7	10.2	11.2	12.2	13.7	15.7	17.7
1.22	5.2	6.4	2881	9.66	10.53	1440	6.44	6.73	955	4.68	4.96	---	7.0	8.0	9.0	10.5	12.5	14.5
1.23	4.0	5.0	2849	6.84	7.78	1425	4.44	4.95	944	3.23	3.66	6.6	9.1	10.1	11.1	12.6	14.6	16.6
1.23	5.6	7.0	2836	10.48	11.39	1418	7.09	7.31	940	5.16	5.38	---	6.2	7.2	8.2	9.7	11.7	13.7
1.24	3.0	3.8	2830	4.02	5.21	1415	2.67	3.38	938	1.98	2.53	8.3	10.8	11.8	12.8	14.3	16.3	18.3
1.24	3.8	4.8	2824	6.32	7.30	1412	4.10	4.65	936	2.99	3.44	6.9	9.4	10.4	11.4	12.9	14.9	16.9
1.24	4.6	5.8	2820	8.36	9.23	1410	5.47	5.87	935	3.97	4.33	5.5	8.0	9.0	10.0	11.5	13.5	15.5
1.25	5.2	6.6	2798	9.71	10.57	1399	6.46	6.75	927	4.70	4.97	---	6.9	7.9	8.9	10.4	12.4	14.4
1.26	4.2	5.4	2773	7.40	8.31	1387	4.80	5.28	919	3.50	3.90	6.1	8.6	9.6	10.6	12.1	14.1	16.1
1.27	6.4	8.2	2766	11.86	12.98	1383	8.35	8.44	917	6.10	6.22	---	---	---	---	8.1	10.1	12.2
1.27	4.8	6.2	2755	8.86	9.72	1378	5.82	6.18	913	4.23	4.55	---	7.5	8.5	9.5	11.0	13.0	15.0
1.28	4.6	6.0	2732	8.41	9.28	1366	5.49	5.89	905	3.99	4.34	5.3	7.8	8.8	9.8	11.3	13.3	15.3
1.29	3.8	5.0	2719	6.38	7.36	1360	4.13	4.68	901	3.01	3.46	6.7	9.2	10.2	11.2	12.7	14.7	16.7
1.30	3.0	4.0	2701	4.09	5.28	1350	2.71	3.42	895	2.01	2.55	8.1	10.6	11.6	12.6	14.1	16.1	18.1
1.30	3.6	4.8	2689	5.84	6.87	1345	3.78	4.38	891	2.77	3.24	7.0	9.5	10.5	11.5	13.0	15.0	17.0
1.31	4.8	6.4	2674	8.90	9.76	1337	5.84	6.20	886	4.24	4.57	---	7.3	8.3	9.3	10.8	12.8	14.8
1.32	4.0	5.4	2652	6.95	7.89	1326	4.49	5.01	879	3.27	3.70	6.2	8.7	9.7	10.7	12.3	14.3	16.3
1.32	5.2	7.0	2646	9.79	10.65	1323	6.50	6.79	877	4.72	5.00	---	6.5	7.5	8.5	10.0	12.0	14.0
1.33	5.6	7.6	2623	10.59	11.50	1311	7.15	7.36	869	5.20	5.42	---	---	6.7	7.7	9.2	11.2	13.3
1.34	3.2	4.4	2621	4.72	5.86	1311	3.09	3.76	869	2.27	2.80	7.7	10.2	11.2	12.2	13.7	15.7	17.7
1.34	6.0	8.2	2603	11.31	12.31	1301	7.78	7.93	863	5.66	5.84	---	---	---	6.9	8.4	10.4	12.5
1.35	4.2	5.8	2594	7.49	8.40	1297	4.85	5.32	860	3.52	3.93	5.7	8.3	9.3	10.3	11.8	13.8	15.8
				ARC-LENGTH CORRECTION FACTOR —>								**0.74**	**0.78**	**0.80**	**0.82**	**0.84**	**0.87**	**0.89**

NOTE: Selection program VIA-VISA available at www.ptwizard.com.

DODGE®

A	S-L CLASSIC	AX	CLASSIC COG

STOCK DRIVE SELECTIONS

Ratio	Belt Size/Center Distance																		
	A48 AX48	A51 AX51	A53 AX53	A55 AX55	A60 AX60	A64 AX64	A66 AX66	A68 AX68	A71 AX71	A75 AX75	A78 AX78	A80 AX80	A85 AX85	A90 AX90	A96 AX96	A105 AX105	A112 AX112	A120 AX120	A128 AX128
1.00	19.9	21.4	22.4	23.4	25.9	27.9	28.9	29.9	31.4	33.4	34.9	35.9	38.4	40.9	43.9	48.4	51.9	55.9	59.9
1.00	19.3	20.8	21.8	22.8	25.3	27.3	28.3	29.3	30.8	32.8	34.3	35.3	37.8	40.3	43.3	47.8	51.3	55.3	59.3
1.00	18.7	20.2	21.2	22.2	24.7	26.7	27.7	28.7	30.2	32.2	33.7	34.7	37.2	39.7	42.7	47.2	50.7	54.7	58.7
1.00	18.1	19.6	20.6	21.6	24.1	26.1	27.1	28.1	29.6	31.6	33.1	34.1	36.6	39.1	42.1	46.6	50.1	54.1	58.1
1.00	17.4	18.9	19.9	20.9	23.4	25.4	26.4	27.4	28.9	30.9	32.4	33.4	35.9	38.4	41.4	45.9	49.4	53.4	57.4
1.00	16.8	18.3	19.3	20.3	22.8	24.8	25.8	26.8	28.3	30.3	31.8	32.8	35.3	37.8	40.8	45.3	48.8	52.8	56.8
1.00	16.5	18.0	19.0	20.0	22.5	24.5	25.5	26.5	28.0	30.0	31.5	32.5	35.0	37.5	40.5	45.0	48.5	52.5	56.5
1.00	15.2	16.7	17.7	18.7	21.2	23.2	24.2	25.2	26.7	28.7	30.2	31.2	33.7	36.2	39.2	43.7	47.2	51.2	55.2
1.00	13.7	15.2	16.2	17.2	19.7	21.7	22.7	23.7	25.2	27.2	28.7	29.7	32.2	34.7	37.7	42.2	45.7	49.7	53.7
1.03	15.7	17.2	18.2	19.2	21.7	23.7	24.7	25.7	27.2	29.2	30.7	31.7	34.2	36.7	39.7	44.2	47.7	51.7	55.7
1.04	16.6	18.1	19.1	20.1	22.6	24.6	25.6	26.6	28.1	30.1	31.6	32.6	35.1	37.6	40.6	45.1	48.6	52.6	56.6
1.04	17.9	19.4	20.4	21.4	23.9	25.9	26.9	27.9	29.4	31.4	32.9	33.9	36.4	38.9	41.9	46.4	49.9	53.9	57.9
1.05	18.8	20.3	21.3	22.3	24.8	26.8	27.8	28.8	30.3	32.3	33.8	34.8	37.3	39.8	42.8	47.3	50.8	54.8	58.8
1.06	19.8	21.3	22.3	23.3	25.8	27.8	28.8	29.8	31.3	33.3	34.8	35.8	38.3	40.8	43.8	48.3	51.8	55.8	59.8
1.06	14.9	16.4	17.4	18.4	20.9	22.9	23.9	24.9	26.4	28.4	29.9	30.9	33.4	35.9	38.9	43.4	46.9	50.9	54.9
1.07	16.2	17.7	18.7	19.7	22.2	24.2	25.2	26.2	27.7	29.7	31.2	32.2	34.7	37.2	40.2	44.7	48.2	52.2	56.2
1.08	17.1	18.6	19.6	20.6	23.1	25.1	26.1	27.1	28.6	30.6	32.1	33.1	35.6	38.1	41.1	45.6	49.1	53.1	57.1
1.09	18.1	19.6	20.6	21.6	24.1	26.1	27.1	28.1	29.6	31.6	33.1	34.1	36.6	39.1	42.1	46.6	50.1	54.1	58.1
1.09	14.8	16.3	17.3	18.3	20.8	22.8	23.8	24.8	26.3	28.3	29.8	30.8	33.3	35.8	38.8	43.3	46.8	50.8	54.8
1.10	15.4	16.9	17.9	18.9	21.4	23.4	24.4	25.4	26.9	28.9	30.4	31.4	33.9	36.4	39.4	43.9	47.4	51.4	55.4
1.10	18.7	20.2	21.2	22.2	24.7	26.7	27.7	28.7	30.2	32.2	33.7	34.7	37.2	39.7	42.7	47.2	50.7	54.7	58.7
1.11	16.0	17.5	18.5	19.5	22.0	24.0	25.0	26.0	27.5	29.5	31.0	32.0	34.5	37.0	40.0	44.5	48.0	52.0	56.0
1.11	19.3	20.8	21.8	22.8	25.3	27.3	28.3	29.3	30.8	32.8	34.3	35.3	37.8	40.3	43.3	47.8	51.3	55.3	59.3
1.12	16.6	18.1	19.1	20.1	22.6	24.6	25.6	26.6	28.1	30.1	31.6	32.6	35.1	37.6	40.6	45.1	48.6	52.6	56.6
1.12	19.6	21.1	22.1	23.1	25.6	27.6	28.6	29.6	31.1	33.1	34.6	35.6	38.1	40.6	43.6	48.1	51.6	55.6	59.6
1.13	17.6	19.1	20.1	21.1	23.6	25.6	26.6	27.6	29.1	31.1	32.6	33.6	36.1	38.6	41.6	46.1	49.6	53.6	57.6
1.13	15.2	16.7	17.7	18.7	21.2	23.2	24.2	25.2	26.7	28.7	30.2	31.2	33.7	36.2	39.2	43.7	47.2	51.2	55.2
1.14	18.2	19.7	20.7	21.7	24.2	26.2	27.2	28.2	29.7	31.7	33.2	34.2	36.7	39.2	42.2	46.7	50.2	54.2	58.2
1.15	16.2	17.7	18.7	19.7	22.2	24.2	25.2	26.2	27.7	29.7	31.2	32.2	34.7	37.2	40.2	44.7	48.2	52.2	56.2
1.15	18.5	20.0	21.0	22.0	24.5	26.5	27.5	28.5	30.0	32.0	33.5	34.5	37.0	39.5	42.5	47.0	50.5	54.5	58.5
	0.90	**0.92**	**0.93**	**0.94**	**0.96**	**0.97**	**0.99**	**1.00**	**1.01**	**1.02**	**1.03**	**1.04**	**1.06**	**1.07**	**1.09**	**1.12**	**1.13**	**1.15**	**1.17**
1.16	14.4	15.9	16.9	17.9	20.4	22.4	23.4	24.4	25.9	27.9	29.4	30.4	32.9	35.4	38.4	42.9	46.4	50.4	54.4
1.16	18.8	20.3	21.3	22.3	24.8	26.8	27.8	28.8	30.3	32.3	33.8	34.8	37.3	39.8	42.8	47.3	50.8	54.8	58.8
1.16	16.8	18.3	19.3	20.3	22.8	24.8	25.8	26.8	28.3	30.3	31.8	32.8	35.3	37.8	40.8	45.3	48.8	52.8	56.8
1.17	19.2	20.7	21.7	22.7	25.2	27.2	28.2	29.2	30.7	32.7	34.2	35.2	37.7	40.2	43.2	47.7	51.2	55.2	59.2
1.18	19.5	21.0	22.0	23.0	25.5	27.5	28.5	29.5	31.0	33.0	34.5	35.5	38.0	40.5	43.5	48.0	51.5	55.5	59.5
1.18	17.7	19.2	20.2	21.2	23.7	25.7	26.7	27.7	29.2	31.2	32.7	33.7	36.2	38.7	41.7	46.2	49.7	53.7	57.7
1.19	16.0	17.5	18.5	19.5	22.0	24.0	25.0	26.0	27.5	29.5	31.0	32.0	34.5	37.0	40.0	44.5	48.0	52.0	56.0
1.19	18.1	19.6	20.6	21.6	24.1	26.1	27.1	28.1	29.6	31.6	33.1	34.1	36.6	39.1	42.1	46.6	50.1	54.1	58.1
1.21	18.7	20.2	21.2	22.2	24.7	26.7	27.7	28.7	30.2	32.2	33.7	34.7	37.2	39.7	42.7	47.2	50.7	54.7	58.7
1.22	15.5	17.0	18.0	19.0	21.5	23.5	24.5	25.5	27.0	29.0	30.5	31.5	34.0	36.5	39.5	44.0	47.5	51.5	55.5
1.23	17.6	19.1	20.1	21.1	23.6	25.6	26.6	27.6	29.1	31.1	32.6	33.6	36.1	38.6	41.6	46.1	49.6	53.6	57.6
1.23	14.7	16.2	17.2	18.2	20.7	22.7	23.7	24.7	26.2	28.3	29.8	30.8	33.3	35.8	38.8	43.3	46.8	50.8	54.8
1.24	19.3	20.8	21.8	22.8	25.3	27.3	28.3	29.3	30.8	32.8	34.3	35.3	37.8	40.3	43.3	47.8	51.3	55.3	59.3
1.24	17.9	19.4	20.4	21.4	23.9	25.9	26.9	27.9	29.4	31.4	32.9	33.9	36.4	38.9	41.9	46.4	49.9	53.9	57.9
1.24	16.5	18.0	19.0	20.0	22.5	24.5	25.5	26.5	28.0	30.0	31.5	32.5	35.0	37.5	40.5	45.0	48.5	52.5	56.5
1.25	15.4	16.9	17.9	18.9	21.4	23.4	24.4	25.4	26.9	28.9	30.4	31.4	33.9	36.4	39.4	43.9	47.4	51.4	55.4
1.26	17.1	18.6	19.6	20.6	23.1	25.1	26.1	27.1	28.6	30.6	32.1	33.1	35.6	38.1	41.1	45.6	49.1	53.1	57.1
1.27	13.2	14.7	15.7	16.7	19.2	21.2	22.2	23.2	24.7	26.7	28.2	29.2	31.7	34.2	37.2	41.7	45.2	49.2	53.2
1.27	16.0	17.5	18.5	19.5	22.0	24.0	25.0	26.0	27.5	29.5	31.0	32.0	34.5	37.0	40.0	44.5	48.0	52.0	56.0
1.28	16.3	17.8	18.8	19.8	22.3	24.3	25.3	26.3	27.8	29.8	31.3	32.3	34.8	37.3	40.3	44.8	48.3	52.3	56.3
1.29	17.7	19.2	20.2	21.2	23.7	25.7	26.7	27.7	29.2	31.2	32.7	33.7	36.2	38.7	41.7	46.2	49.7	53.7	57.7
1.30	19.1	20.6	21.6	22.6	25.2	27.2	28.2	29.2	30.7	32.7	34.2	35.2	37.7	40.2	43.2	47.7	51.2	55.2	59.2
1.30	18.0	19.5	20.5	21.5	24.0	26.0	27.0	28.0	29.5	31.6	33.1	34.1	36.6	39.1	42.1	46.6	50.1	54.1	58.1
1.31	15.8	17.3	18.3	19.3	21.8	23.8	24.8	25.8	27.3	29.3	30.8	31.8	34.3	36.8	39.8	44.4	47.9	51.9	55.9
1.32	17.3	18.8	19.8	20.8	23.3	25.3	26.3	27.3	28.8	30.8	32.3	33.3	35.8	38.3	41.3	45.8	49.3	53.3	57.3
1.32	15.0	16.5	17.5	18.6	21.1	23.1	24.1	25.1	26.6	28.6	30.1	31.1	33.6	36.1	39.1	43.6	47.1	51.1	55.1
1.33	14.3	15.8	16.8	17.8	20.3	22.3	23.3	24.3	25.8	27.8	29.3	30.3	32.8	35.3	38.3	42.8	46.3	50.3	54.3
1.34	18.7	20.2	21.2	22.2	24.7	26.7	27.7	28.7	30.2	32.2	33.7	34.7	37.2	39.7	42.7	47.2	50.7	54.7	58.7
1.34	13.5	15.0	16.0	17.0	19.5	21.5	22.5	23.5	25.0	27.0	28.5	29.5	32.0	34.5	37.5	42.0	45.5	49.5	53.5
1.35	16.8	18.3	19.3	20.3	22.8	24.8	25.8	26.8	28.3	30.3	31.8	32.8	35.3	37.8	40.8	45.3	48.8	52.8	56.8
	0.90	**0.92**	**0.93**	**0.94**	**0.96**	**0.97**	**0.99**	**1.00**	**1.01**	**1.02**	**1.03**	**1.04**	**1.06**	**1.07**	**1.09**	**1.11**	**1.13**	**1.15**	**1.17**

NOTE: Selection program VIA-VISA available at www.ptwizard.com.

SELECTION

DODGE®

A	S-L CLASSIC	AX	CLASSIC COG

STOCK DRIVE SELECTIONS

Ratio	Stock Shv. Datum Diam.		3500 RPM Driver			1750 RPM Driver			1160 RPM Driver			Belt Size/Center Distance						
			Driven	HP Per Belt		Driven	HP Per Belt		Driven	HP Per Belt		A26	A31	A33	A35	A38	A42	A46
	Driver	Driven	RPM	A	AX	RPM	A	AX	RPM	A	AX	AX26	AX31	AX33	AX35	AX38	AX42	AX46
1.36	3.0	4.2	2583	4.14	5.34	1291	2.73	3.44	856	2.02	2.57	8.0	10.5	11.5	12.5	14.0	16.0	18.0
1.36	4.6	6.4	2571	8.48	9.35	1285	5.53	5.93	852	4.01	4.37	---	7.5	8.5	9.5	11.0	13.0	15.0
1.37	5.0	7.0	2551	9.40	10.26	1276	6.19	6.52	846	4.50	4.80	---	6.7	7.7	8.7	10.2	12.2	14.2
1.38	3.8	5.4	2531	6.46	7.45	1266	4.17	4.72	839	3.04	3.49	6.4	8.9	9.9	10.9	12.4	14.4	16.4
1.38	6.4	9.0	2530	11.97	13.09	1265	8.41	8.49	838	6.13	6.25	---	---	---	---	7.4	9.5	11.5
1.40	4.6	6.6	2497	8.51	9.38	1249	5.54	5.94	828	4.02	4.38	---	7.3	8.3	9.3	10.8	12.8	14.8
1.40	3.6	5.2	2496	5.92	6.95	1248	3.82	4.42	827	2.79	3.27	6.7	9.2	10.2	11.2	12.7	14.7	16.7
1.41	3.0	4.4	2475	4.18	5.38	1237	2.75	3.47	820	2.04	2.58	7.8	10.3	11.3	12.3	13.8	15.8	17.8
1.42	4.8	7.0	2457	8.99	9.85	1228	5.88	6.25	814	4.27	4.60	---	6.8	7.8	8.8	10.3	12.3	14.3
1.43	5.6	8.2	2439	10.66	11.57	1220	7.18	7.40	808	5.22	5.44	---	---	---	7.2	8.7	10.7	12.8
1.44	4.2	6.2	2436	7.55	8.46	1218	4.88	5.35	807	3.54	3.95	5.4	7.9	8.9	9.9	11.4	13.4	15.5
1.45	3.2	4.8	2419	4.80	5.94	1209	3.13	3.80	802	2.30	2.82	7.3	9.8	10.8	11.8	13.3	15.3	17.4
1.47	3.0	4.6	2376	4.22	5.41	1188	2.77	3.48	787	2.05	2.60	7.6	10.2	11.2	12.2	13.7	15.7	17.7
1.48	3.8	5.8	2367	6.52	7.50	1184	4.20	4.75	785	3.06	3.51	6.0	8.6	9.6	10.6	12.1	14.1	16.1
1.48	4.6	7.0	2362	8.56	9.43	1181	5.56	5.97	783	4.04	4.39	---	6.9	8.0	9.0	10.5	12.5	14.5
1.50	4.0	6.2	2330	7.07	8.01	1165	4.55	5.07	772	3.31	3.74	5.5	8.1	9.1	10.1	11.6	13.6	15.6
1.50	3.2	5.0	2329	4.83	5.97	1164	3.14	3.81	772	2.31	2.83	7.2	9.7	10.7	11.7	13.2	15.2	17.2
1.53	3.4	5.4	2289	5.42	6.50	1144	3.50	4.14	759	2.56	3.07	6.7	9.2	10.2	11.2	12.7	14.7	16.7
1.53	3.0	4.8	2284	4.24	5.44	1142	2.78	3.50	757	2.06	2.60	7.5	10.0	11.0	12.0	13.5	15.5	17.5
1.54	5.2	8.2	2276	9.92	10.79	1138	6.57	6.86	754	4.77	5.04	---	---	6.5	7.5	9.0	11.0	13.0
1.55	4.0	6.4	2261	7.08	8.03	1131	4.56	5.08	749	3.32	3.74	5.4	7.9	8.9	9.9	11.4	13.4	15.4
1.56	3.2	5.2	2246	4.85	5.99	1123	3.15	3.82	744	2.32	2.84	7.0	9.5	10.5	11.5	13.0	15.0	17.0
1.57	5.6	9.0	2231	10.73	11.64	1116	7.21	7.43	740	5.24	5.46	---	---	---	---	8.0	10.0	12.1
1.59	3.0	5.0	2199	4.27	5.46	1099	2.79	3.51	729	2.06	2.61	7.3	9.8	10.8	11.8	13.3	15.3	17.3
1.59	4.0	6.6	2196	7.10	8.05	1098	4.57	5.08	728	3.32	3.75	---	7.7	8.7	9.7	11.3	13.3	15.3
1.59	5.0	8.2	2195	9.51	10.37	1097	6.25	6.58	727	4.53	4.84	---	---	6.6	7.6	9.1	11.2	13.2
1.60	3.6	6.0	2183	6.02	7.05	1092	3.87	4.47	724	2.82	3.30	6.0	8.5	9.5	10.5	12.1	14.1	16.1
1.61	4.2	7.0	2172	7.62	8.54	1086	4.91	5.39	720	3.57	3.97	---	7.2	8.2	9.3	10.8	12.8	14.8
1.61	3.2	5.4	2168	4.87	6.01	1084	3.16	3.83	718	2.32	2.85	6.8	9.3	10.3	11.3	12.9	14.9	16.9
1.65	3.0	5.2	2120	4.28	5.48	1060	2.80	3.52	703	2.07	2.62	7.1	9.7	10.7	11.7	13.2	15.2	17.2
ARC-LENGTH CORRECTION FACTOR —>												**0.73**	**0.78**	**0.80**	**0.81**	**0.83**	**0.86**	**0.89**
1.65	3.6	6.2	2117	6.03	7.06	1059	3.88	4.47	702	2.83	3.31	5.8	8.4	9.4	10.4	11.9	13.9	15.9
1.66	4.8	8.2	2113	9.09	9.95	1057	5.93	6.29	700	4.30	4.63	---	---	6.7	7.8	9.3	11.3	13.3
1.67	3.8	6.6	2096	6.59	7.57	1048	4.23	4.79	695	3.08	3.53	5.3	7.9	8.9	9.9	11.4	13.4	15.4
1.68	5.2	9.0	2082	9.97	10.83	1041	6.59	6.88	690	4.78	5.06	---	---	---	6.7	8.3	10.3	12.4
1.69	3.4	6.0	2074	5.47	6.55	1037	3.53	4.16	687	2.58	3.08	6.1	8.7	9.7	10.7	12.2	14.2	16.2
1.71	3.0	5.4	2047	4.30	5.49	1023	2.81	3.52	678	2.08	2.62	7.0	9.5	10.5	11.5	13.0	15.0	17.0
1.72	6.0	10.6	2034	11.48	12.47	1017	7.86	8.01	674	5.72	5.89	---	---	---	---	---	8.3	10.4
1.72	4.6	8.2	2031	8.64	9.51	1016	5.60	6.01	673	4.07	4.42	---	---	6.9	7.9	9.4	11.5	13.5
1.74	3.4	6.2	2011	5.49	6.57	1005	3.53	4.17	666	2.59	3.09	5.9	8.5	9.5	10.5	12.0	14.0	16.1
1.77	3.8	7.0	1982	6.61	7.59	991	4.24	4.80	657	3.09	3.54	---	7.5	8.5	9.5	11.1	13.1	15.1
1.77	3.0	5.6	1978	4.31	5.51	989	2.82	3.53	656	2.08	2.63	6.8	9.3	10.3	11.3	12.8	14.8	16.8
1.79	3.4	6.4	1951	5.50	6.58	976	3.54	4.17	647	2.59	3.09	5.8	8.3	9.3	10.3	11.9	13.9	15.9
1.81	4.8	9.0	1933	9.12	9.98	966	5.95	6.31	641	4.31	4.64	---	---	---	7.0	8.6	10.6	12.6
1.82	4.0	7.6	1921	7.15	8.10	961	4.59	5.11	637	3.34	3.77	---	6.8	7.8	8.9	10.4	12.4	14.4
1.83	3.0	5.8	1914	4.32	5.52	957	2.82	3.53	634	2.08	2.63	6.6	9.1	10.1	11.2	12.7	14.7	16.7
1.84	5.6	10.6	1906	10.79	11.70	953	7.25	7.46	632	5.26	5.49	---	---	---	---	---	8.6	10.6
1.85	3.4	6.6	1895	5.51	6.58	948	3.54	4.18	628	2.59	3.09	5.6	8.1	9.2	10.2	11.7	13.7	15.7
1.87	4.2	8.2	1868	7.68	8.59	934	4.94	5.42	619	3.59	3.99	---	6.1	7.1	8.2	9.7	11.7	13.8
1.88	4.6	9.0	1858	8.67	9.53	929	5.62	6.02	616	4.07	4.43	---	---	---	7.1	8.7	10.7	12.8
1.89	3.0	6.0	1854	4.33	5.53	927	2.83	3.54	615	2.09	2.63	6.4	9.0	10.0	11.0	12.5	14.5	16.5
1.91	3.8	7.6	1833	6.63	7.62	917	4.25	4.81	608	3.10	3.55	---	6.9	8.0	9.0	10.5	12.6	14.6
1.95	3.0	6.2	1798	4.34	5.53	899	2.83	3.54	596	2.09	2.64	6.2	8.8	9.8	10.8	12.3	14.3	16.3
1.95	3.4	7.0	1793	5.52	6.60	896	3.55	4.18	594	2.60	3.10	5.2	7.8	8.8	9.8	11.3	13.4	15.4
1.96	4.0	8.2	1787	7.17	8.12	893	4.60	5.12	592	3.35	3.77	---	6.2	7.3	8.3	9.8	11.9	13.9
1.97	5.2	10.6	1779	10.01	10.88	889	6.61	6.90	590	4.80	5.07	---	---	---	---	---	8.8	10.9
2.00	6.4	13.2	1747	12.15	13.27	874	8.50	8.58	579	6.19	6.31	---	---	---	---	---	---	---
2.01	3.6	7.6	1746	6.09	7.12	873	3.91	4.50	579	2.85	3.33	---	7.1	8.1	9.1	10.7	12.7	14.7
2.01	3.0	6.4	1745	4.34	5.54	872	2.83	3.55	578	2.09	2.64	6.0	8.6	9.6	10.6	12.2	14.2	16.2
2.04	5.0	10.6	1715	9.59	10.45	857	6.29	6.62	568	4.56	4.86	---	---	---	---	---	9.0	11.0
2.05	3.8	8.2	1705	6.65	7.63	853	4.26	4.82	565	3.10	3.55	---	6.3	7.4	8.4	10.0	12.0	14.1
ARC-LENGTH CORRECTION FACTOR —>												**0.73**	**0.78**	**0.80**	**0.81**	**0.83**	**0.86**	**0.89**

NOTE: Selection program VIA-VISA available at www.ptwizard.com.

DODGE®

A	S-L CLASSIC	AX	CLASSIC COG

STOCK DRIVE SELECTIONS

Ratio	Belt Size/Center Distance																		
	A48 AX48	A51 AX51	A53 AX53	A55 AX55	A60 AX60	A64 AX64	A66 AX66	A68 AX68	A71 AX71	A75 AX75	A78 AX78	A80 AX80	A85 AX85	A90 AX90	A96 AX96	A105 AX105	A112 AX112	A120 AX120	A128 AX128
1.36	19.0	20.5	21.5	22.5	25.0	27.0	28.0	29.0	30.5	32.5	34.0	35.0	37.5	40.0	43.0	47.5	51.0	55.0	59.0
1.36	16.0	17.5	18.5	19.5	22.0	24.0	25.0	26.0	27.5	29.5	31.0	32.0	34.5	37.0	40.0	44.5	48.0	52.0	56.0
1.37	15.2	16.7	17.7	18.7	21.2	23.2	24.2	25.2	26.7	28.7	30.2	31.2	33.7	36.2	39.2	43.7	47.2	51.2	55.2
1.38	17.4	18.9	19.9	20.9	23.4	25.4	26.4	27.4	28.9	30.9	32.4	33.4	35.9	38.4	41.4	45.9	49.4	53.4	57.4
1.38	12.5	14.0	15.0	16.0	18.5	20.5	21.5	22.5	24.0	26.0	27.5	28.5	31.0	33.5	36.5	41.0	44.5	48.5	52.5
1.40	15.8	17.3	18.3	19.3	21.8	23.8	24.8	25.8	27.3	29.3	30.8	31.8	34.3	36.8	39.8	44.3	47.8	51.8	55.8
1.40	17.7	19.2	20.2	21.2	23.7	25.7	26.7	27.7	29.2	31.2	32.7	33.7	36.2	38.7	41.7	46.2	49.7	53.7	57.7
1.41	18.8	20.3	21.3	22.3	24.8	26.8	27.8	28.8	30.3	32.3	33.8	34.8	37.3	39.8	42.8	47.3	50.8	54.8	58.8
1.42	15.3	16.9	17.9	18.9	21.4	23.4	24.4	25.4	26.9	28.9	30.4	31.4	33.9	36.4	39.4	43.9	47.4	51.4	55.4
1.43	13.8	15.3	16.3	17.3	19.8	21.8	22.8	23.8	25.3	27.3	28.8	29.8	32.3	34.8	37.8	42.3	45.8	49.8	53.8
1.44	16.5	18.0	19.0	20.0	22.5	24.5	25.5	26.5	28.0	30.0	31.5	32.5	35.0	37.5	40.5	45.0	48.5	52.5	56.5
1.45	18.4	19.9	20.9	21.9	24.4	26.4	27.4	28.4	29.9	31.9	33.4	34.4	36.9	39.4	42.4	46.9	50.4	54.4	58.4
1.47	18.7	20.2	21.2	22.2	24.7	26.7	27.7	28.7	30.2	32.2	33.7	34.7	37.2	39.7	42.7	47.2	50.7	54.7	58.7
1.48	17.1	18.6	19.6	20.6	23.1	25.1	26.1	27.1	28.6	30.6	32.1	33.1	35.6	38.1	41.1	45.6	49.1	53.1	57.1
1.48	15.5	17.0	18.0	19.0	21.5	23.5	24.5	25.5	27.0	29.0	30.5	31.5	34.0	36.5	39.5	44.0	47.5	51.5	55.5
1.50	16.6	18.1	19.1	20.1	22.6	24.6	25.6	26.6	28.1	30.1	31.6	32.6	35.1	37.6	40.6	45.1	48.6	52.6	56.6
1.50	18.2	19.7	20.7	21.7	24.2	26.2	27.2	28.2	29.7	31.7	33.2	34.2	36.7	39.2	42.2	46.7	50.2	54.2	58.2
1.53	17.7	19.2	20.2	21.2	23.7	25.7	26.7	27.7	29.2	31.2	32.7	33.7	36.2	38.7	41.7	46.2	49.7	53.7	57.7
1.53	18.5	20.0	21.0	22.0	24.5	26.5	27.5	28.5	30.0	32.0	33.5	34.5	37.0	39.5	42.5	47.0	50.5	54.5	58.5
1.54	14.1	15.6	16.6	17.6	20.1	22.1	23.1	24.1	25.6	27.6	29.1	30.1	32.6	35.1	38.1	42.6	46.1	50.1	54.1
1.55	16.4	17.9	18.9	19.9	22.5	24.5	25.5	26.5	28.0	30.0	31.5	32.5	35.0	37.5	40.5	45.0	48.5	52.5	56.5
1.56	18.0	19.5	20.5	21.5	24.0	26.0	27.0	28.0	29.5	31.5	33.0	34.0	36.5	39.0	42.0	46.5	50.0	54.0	58.0
1.57	13.1	14.6	15.6	16.6	19.1	21.1	22.1	23.1	24.6	26.6	28.1	29.1	31.6	34.1	37.2	41.7	45.2	49.2	53.2
1.59	18.3	19.8	20.8	21.8	24.3	26.4	27.4	28.4	29.9	31.9	33.4	34.4	36.9	39.4	42.4	46.9	50.4	54.4	58.4
1.59	16.3	17.8	18.8	19.8	22.3	24.3	25.3	26.3	27.8	29.8	31.3	32.3	34.8	37.3	40.3	44.8	48.3	52.3	56.3
1.59	14.2	15.7	16.7	17.7	20.2	22.2	23.2	24.2	25.7	27.7	29.2	30.2	32.7	35.3	38.3	42.8	46.3	50.3	54.3
1.60	17.1	18.6	19.6	20.6	23.1	25.1	26.1	27.1	28.6	30.6	32.1	33.1	35.6	38.1	41.1	45.6	49.1	53.1	57.1
1.61	15.8	17.3	18.3	19.3	21.8	23.8	24.8	25.8	27.3	29.3	30.8	31.8	34.3	36.8	39.8	44.3	47.8	51.8	55.8
1.61	17.9	19.4	20.4	21.4	23.9	25.9	26.9	27.9	29.4	31.4	32.9	33.9	36.4	38.9	41.9	46.4	49.9	53.9	57.9
1.65	18.2	19.7	20.7	21.7	24.2	26.2	27.2	28.2	29.7	31.7	33.2	34.2	36.7	39.2	42.2	46.7	50.2	54.2	58.2
	0.90	**0.91**	**0.93**	**0.94**	**0.96**	**0.97**	**0.98**	**0.99**	**1.00**	**1.02**	**1.03**	**1.04**	**1.05**	**1.07**	**1.09**	**1.11**	**1.13**	**1.15**	**1.17**
1.65	16.9	18.4	19.4	20.4	22.9	24.9	25.9	26.9	28.4	30.4	31.9	32.9	35.4	37.9	40.9	45.4	48.9	52.9	56.9
1.66	14.3	15.9	16.9	17.9	20.4	22.4	23.4	24.4	25.9	27.9	29.4	30.4	32.9	35.4	38.4	42.9	46.4	50.4	54.4
1.67	16.4	17.9	18.9	19.9	22.4	24.4	25.4	26.4	28.0	30.0	31.5	32.5	35.0	37.5	40.5	45.0	48.5	52.5	56.5
1.68	13.4	14.9	15.9	16.9	19.4	21.4	22.4	23.4	24.9	26.9	28.4	29.4	31.9	34.5	37.5	42.0	45.5	49.5	53.5
1.69	17.2	18.7	19.7	20.7	23.2	25.2	26.2	27.2	28.7	30.7	32.2	33.2	35.7	38.2	41.3	45.8	49.3	53.3	57.3
1.71	18.0	19.5	20.5	21.5	24.0	26.0	27.0	28.0	29.5	31.5	33.0	34.0	36.5	39.0	42.0	46.5	50.0	54.0	58.0
1.72	11.4	12.9	13.9	14.9	17.5	19.5	20.5	21.5	23.0	25.0	26.5	27.5	30.0	32.5	35.5	40.1	43.6	47.6	51.6
1.72	14.5	16.0	17.0	18.0	20.5	22.5	23.5	24.5	26.0	28.0	29.5	30.5	33.1	35.6	38.6	43.1	46.6	50.6	54.6
1.74	17.1	18.6	19.6	20.6	23.1	25.1	26.1	27.1	28.6	30.6	32.1	33.1	35.6	38.1	41.1	45.6	49.1	53.1	57.1
1.77	16.1	17.6	18.6	19.6	22.1	24.1	25.1	26.1	27.6	29.6	31.1	32.1	34.6	37.1	40.1	44.6	48.1	52.1	56.1
1.77	17.9	19.4	20.4	21.4	23.9	25.9	26.9	27.9	29.4	31.4	32.9	33.9	36.4	38.9	41.9	46.4	49.9	53.9	57.9
1.79	16.9	18.4	19.4	20.4	22.9	24.9	25.9	26.9	28.4	30.4	31.9	32.9	35.4	37.9	40.9	45.4	48.9	52.9	56.9
1.81	13.7	15.2	16.2	17.2	19.7	21.7	22.7	23.7	25.2	27.2	28.7	29.7	32.2	34.8	37.8	42.3	45.8	49.8	53.8
1.82	15.4	16.9	18.0	19.0	21.5	23.5	24.5	25.5	27.0	29.0	30.5	31.5	34.0	36.5	39.5	44.0	47.5	51.5	55.5
1.83	17.7	19.2	20.2	21.2	23.7	25.7	26.7	27.7	29.2	31.2	32.7	33.7	36.2	38.7	41.7	46.2	49.7	53.7	57.7
1.84	11.7	13.2	14.2	15.2	17.8	19.8	20.8	21.8	23.3	25.3	26.8	27.8	30.3	32.8	35.8	40.4	43.9	47.9	51.9
1.85	16.7	18.2	19.2	20.2	22.7	24.7	25.8	26.8	28.3	30.3	31.8	32.8	35.3	37.8	40.8	45.3	48.8	52.8	56.8
1.87	14.8	16.3	17.3	18.3	20.8	22.8	23.8	24.8	26.3	28.3	29.8	30.9	33.4	35.9	38.9	43.4	46.9	50.9	54.9
1.88	13.8	15.3	16.3	17.3	19.9	21.9	22.9	23.9	25.4	27.4	28.9	29.9	32.4	34.9	37.9	42.4	45.9	49.9	53.9
1.89	17.5	19.0	20.0	21.0	23.5	25.5	26.5	27.5	29.0	31.0	32.6	33.6	36.1	38.6	41.6	46.1	49.6	53.6	57.6
1.91	15.6	17.1	18.1	19.1	21.6	23.6	24.6	25.6	27.1	29.1	30.6	31.6	34.1	36.7	39.7	44.2	47.7	51.7	55.7
1.95	17.4	18.9	19.9	20.9	23.4	25.4	26.4	27.4	28.9	30.9	32.4	33.4	35.9	38.4	41.4	45.9	49.4	53.4	57.4
1.95	16.4	17.9	18.9	19.9	22.4	24.4	25.4	26.4	27.9	29.9	31.4	32.4	34.9	37.4	40.4	44.9	48.5	52.5	56.5
1.96	14.9	16.4	17.4	18.5	21.0	23.0	24.0	25.0	26.5	28.5	30.0	31.0	33.5	36.0	39.0	43.5	47.0	51.0	55.0
1.97	11.9	13.5	14.5	15.5	18.0	20.1	21.1	22.1	23.6	25.6	27.1	28.1	30.6	33.1	36.1	40.7	44.2	48.2	52.2
2.00	---	10.2	11.3	12.3	14.9	16.9	17.9	19.0	20.5	22.5	24.0	25.0	27.6	30.1	33.1	37.6	41.1	45.1	49.1
2.01	15.7	17.2	18.2	19.3	21.8	23.8	24.8	25.8	27.3	29.3	30.8	31.8	34.3	36.8	39.8	44.3	47.8	51.8	55.8
2.01	17.2	18.7	19.7	20.7	23.2	25.2	26.2	27.2	28.7	30.7	32.2	33.2	35.7	38.2	41.2	45.7	49.2	53.2	57.2
2.04	12.1	13.6	14.6	15.7	18.2	20.2	21.2	22.2	23.7	25.8	27.3	28.3	30.8	33.3	36.3	40.8	44.3	48.3	52.3
2.05	15.1	16.6	17.6	18.6	21.1	23.1	24.1	25.1	26.6	28.6	30.1	31.2	33.7	36.2	39.2	43.7	47.2	51.2	55.2
	.89	**0.90**	**0.92**	**0.93**	**0.95**	**0.97**	**0.98**	**0.99**	**1.00**	**1.01**	**1.02**	**1.03**	**1.05**	**1.06**	**1.08**	**1.11**	**1.13**	**1.14**	**1.16**

NOTE: Selection program VIA-VISA available at www.ptwizard.com.

SELECTION

DODGE®

A	S-L CLASSIC

AX	CLASSIC COG

STOCK DRIVE SELECTIONS

Ratio	Stock Shv. Datum Diam.		3500 RPM Driver			1750 RPM Driver			1160 RPM Driver			Belt Size/Center Distance						
			Driven	HP Per Belt		Driven	HP Per Belt		Driven	HP Per Belt		A26	A31	A33	A35	A38	A42	A46
	Driver	Driven	RPM	A	AX	RPM	A	AX	RPM	A	AX	AX26	AX31	AX33	AX35	AX38	AX42	AX46
2.07	3.0	6.6	1695	4.35	5.55	847	2.84	3.55	562	2.09	2.64	5.8	8.4	9.4	10.5	12.0	14.0	16.0
2.07	5.6	12.0	1691	10.82	11.73	845	7.26	7.48	560	5.27	5.50	---	---	---	---	---	---	9.3
2.11	3.4	7.6	1658	5.53	6.61	829	3.56	4.19	549	2.60	3.10	---	7.2	8.2	9.3	10.8	12.8	14.9
2.12	4.8	10.6	1651	9.15	10.01	826	5.96	6.33	547	4.32	4.65	---	---	---	---	7.0	9.1	11.2
2.13	6.0	13.2	1644	11.53	12.53	822	7.89	8.04	545	5.74	5.91	---	---	---	---	---	---	---
2.14	4.0	9.0	1634	7.19	8.13	817	4.61	5.13	542	3.35	3.78	---	---	6.5	7.5	9.1	11.2	13.2
2.16	3.6	8.2	1624	6.11	7.13	812	3.91	4.51	538	2.85	3.33	---	6.5	7.5	8.6	10.1	12.2	14.2
2.18	3.0	7.0	1603	4.36	5.55	801	2.84	3.55	531	2.09	2.64	5.4	8.1	9.1	10.1	11.6	13.7	15.7
2.20	4.6	10.6	1587	8.70	9.56	794	5.63	6.04	526	4.08	4.44	---	---	---	---	7.1	9.2	11.3
2.22	5.2	12.0	1578	10.03	10.90	789	6.62	6.91	523	4.80	5.08	---	---	---	---	---	---	9.5
2.23	3.2	7.6	1570	4.96	6.10	785	3.20	3.88	520	2.35	2.88	---	7.3	8.4	9.4	11.0	13.0	15.0
2.27	3.4	8.2	1542	5.55	6.62	771	3.56	4.20	511	2.60	3.11	---	6.6	7.7	8.7	10.3	12.3	14.3
2.30	5.0	12.0	1521	9.61	10.47	761	6.30	6.63	504	4.57	4.87	---	---	---	---	---	---	9.7
2.36	3.6	9.0	1485	6.12	7.15	743	3.92	4.51	492	2.86	3.33	---	---	6.7	7.8	9.4	11.4	13.5
2.36	3.0	7.6	1482	4.37	5.56	741	2.85	3.56	491	2.10	2.65	---	7.5	8.5	9.6	11.1	13.1	15.2
2.39	4.8	12.0	1464	9.17	10.03	732	5.97	6.34	485	4.33	4.66	---	---	---	---	---	---	9.8
2.40	3.2	8.2	1460	4.97	6.10	730	3.21	3.88	484	2.35	2.88	---	6.7	7.8	8.8	10.4	12.4	14.5
2.40	4.2	10.6	1460	7.72	8.63	730	4.96	5.44	484	3.60	4.00	---	---	---	---	7.3	9.5	11.6
2.43	5.2	13.2	1438	10.05	10.91	719	6.63	6.92	477	4.81	5.08	---	---	---	---	---	---	---
2.48	3.4	9.0	1410	5.55	6.63	705	3.57	4.20	467	2.61	3.11	---	---	6.8	7.9	9.5	11.6	13.6
2.49	4.6	12.0	1408	8.71	9.58	704	5.64	6.04	467	4.09	4.44	---	---	---	---	---	7.7	9.9
2.51	4.0	10.6	1396	7.21	8.15	698	4.62	5.14	463	3.36	3.79	---	---	---	---	7.5	9.6	11.7
2.52	5.0	13.2	1387	9.62	10.48	693	6.30	6.63	460	4.57	4.87	---	---	---	---	---	---	---
2.54	3.0	8.2	1379	4.38	5.57	689	2.85	3.56	457	2.10	2.65	---	6.9	7.9	9.0	10.5	12.6	14.6
2.57	5.6	15.0	1361	10.85	11.75	680	7.27	7.49	451	5.28	5.50	---	---	---	---	---	---	---
2.62	3.2	9.0	1336	4.98	6.11	668	3.21	3.89	443	2.36	2.88	---	5.9	7.0	8.1	9.6	11.7	13.8
2.62	4.8	13.2	1335	9.18	10.04	668	5.98	6.34	442	4.33	4.66	---	---	---	---	---	---	8.5
2.63	3.8	10.6	1332	6.68	7.66	666	4.28	4.83	442	3.11	3.56	---	---	---	---	7.6	9.8	11.9
2.67	5.6	15.6	1310	10.85	11.76	655	7.27	7.49	434	5.28	5.51	---	---	---	---	---	---	---
2.70	4.2	12.0	1295	7.73	8.65	647	4.97	5.45	429	3.60	4.01	---	---	---	---	---	8.0	10.2
ARC-LENGTH CORRECTION FACTOR —>												**0.70**	**0.75**	**0.76**	**0.79**	**0.80**	**0.81**	**0.84**
2.71	6.4	18.0	1291	12.19	13.31	646	8.51	8.60	428	6.20	6.33	---	---	---	---	---	---	---
2.73	4.6	13.2	1284	8.72	9.59	642	5.64	6.05	425	4.09	4.45	---	---	---	---	---	---	8.6
2.76	3.6	10.6	1269	6.13	7.16	634	3.93	4.52	420	2.86	3.34	---	---	---	---	7.7	9.9	12.0
2.78	3.0	9.0	1261	4.38	5.58	631	2.85	3.56	418	2.10	2.65	---	6.0	7.1	8.2	9.8	11.9	13.9
2.83	4.0	12.0	1238	7.22	8.16	619	4.63	5.14	410	3.36	3.79	---	---	---	---	---	8.1	10.3
2.86	5.0	15.0	1224	9.63	10.49	612	6.31	6.64	406	4.57	4.88	---	---	---	---	---	---	---
2.88	6.0	18.0	1215	11.57	12.56	607	7.90	8.05	403	5.75	5.92	---	---	---	---	---	---	---
2.90	3.4	10.6	1205	5.57	6.65	602	3.57	4.21	399	2.61	3.11	---	---	---	---	7.8	10.0	12.1
2.96	3.8	12.0	1182	6.69	7.67	591	4.28	4.84	392	3.11	3.57	---	---	---	---	---	8.2	10.4
2.97	4.8	15.0	1179	9.19	10.05	589	5.98	6.34	391	4.33	4.66	---	---	---	---	---	---	---
3.07	3.2	10.6	1141	4.99	6.12	571	3.22	3.89	378	2.36	2.88	---	---	---	6.2	8.0	10.1	12.3
3.09	4.6	15.0	1133	8.72	9.59	567	5.65	6.05	376	4.09	4.45	---	---	---	---	---	---	---
3.10	4.0	13.2	1129	7.22	8.17	564	4.63	5.14	374	3.36	3.79	---	---	---	---	---	---	9.0
3.11	3.6	12.0	1125	6.14	7.17	563	3.93	4.52	373	2.86	3.34	---	---	---	---	---	8.3	10.6
3.13	6.0	19.6	1118	11.57	12.56	559	7.91	8.06	370	5.75	5.92	---	---	---	---	---	---	---
3.21	4.6	15.6	1091	8.73	9.60	545	5.65	6.05	362	4.10	4.45	---	---	---	---	---	---	---
3.25	3.0	10.6	1077	4.39	5.59	539	2.86	3.57	357	2.11	2.65	---	---	---	6.3	8.1	10.3	12.4
3.25	3.8	13.2	1077	6.69	7.67	539	4.28	4.84	357	3.11	3.57	---	---	---	---	---	---	9.1
3.29	5.2	18.0	1063	10.07	10.93	531	6.64	6.93	352	4.81	5.09	---	---	---	---	---	---	---
3.36	4.2	15.0	1042	7.74	8.66	521	4.97	5.45	345	3.61	4.01	---	---	---	---	---	---	---
3.41	3.6	13.2	1026	6.14	7.17	513	3.93	4.53	340	2.87	3.34	---	---	---	---	---	---	9.2
3.42	5.0	18.0	1024	9.64	10.50	512	6.31	6.64	340	4.58	4.88	---	---	---	---	---	---	---
3.46	3.2	12.0	1012	4.99	6.13	506	3.22	3.89	335	2.36	2.89	---	---	---	---	---	8.6	10.8
3.49	4.2	15.6	1003	7.75	8.66	502	4.97	5.45	332	3.61	4.01	---	---	---	---	---	---	---
3.51	4.0	15.0	997	7.23	8.17	498	4.63	5.15	330	3.36	3.79	---	---	---	---	---	---	---
3.55	4.8	18.0	986	9.19	10.05	493	5.98	6.35	327	4.34	4.66	---	---	---	---	---	---	---
3.58	5.2	19.6	977	10.07	10.93	489	6.64	6.93	324	4.81	5.09	---	---	---	---	---	---	---
3.59	3.4	13.2	974	5.58	6.66	487	3.58	4.21	323	2.62	3.12	---	---	---	---	---	---	9.3
3.65	4.0	15.6	959	7.23	8.17	480	4.63	5.15	318	3.36	3.79	---	---	---	---	---	---	---
3.66	3.0	12.0	956	4.40	5.59	478	2.86	3.57	317	2.11	2.65	---	---	---	---	---	8.7	11.0
ARC-LENGTH CORRECTION FACTOR —>												**---**	**0.71**	**0.73**	**0.75**	**0.77**	**0.77**	**0.81**

NOTE: Selection program VIA-VISA available at www.ptwizard.com.

DODGE®

A	S-L CLASSIC	AX	CLASSIC COG

STOCK DRIVE SELECTIONS

Ratio	Belt Size/Center Distance																		
	A48 AX48	A51 AX51	A53 AX53	A55 AX55	A60 AX60	A64 AX64	A66 AX66	A68 AX68	A71 AX71	A75 AX75	A78 AX78	A80 AX80	A85 AX85	A90 AX90	A96 AX96	A105 AX105	A112 AX112	A120 AX120	A128 AX128
2.07	17.0	18.5	19.5	20.5	23.0	25.0	26.1	27.1	28.6	30.6	32.1	33.1	35.6	38.1	41.1	45.6	49.1	53.1	57.1
2.07	10.3	11.9	12.9	14.0	16.5	18.6	19.6	20.6	22.1	24.1	25.6	26.6	29.2	31.7	34.7	39.2	42.7	46.7	50.7
2.11	15.9	17.4	18.4	19.4	21.9	23.9	24.9	25.9	27.4	29.4	30.9	31.9	34.5	37.0	40.0	44.5	48.0	52.0	56.0
2.12	12.2	13.8	14.8	15.8	18.3	20.4	21.4	22.4	23.9	25.9	27.4	28.4	30.9	33.4	36.4	41.0	44.5	48.5	52.5
2.13	---	10.5	11.5	12.6	15.2	17.2	18.2	19.2	20.8	22.8	24.3	25.3	27.8	30.4	33.4	37.9	41.4	45.4	49.4
2.14	14.2	15.7	16.8	17.8	20.3	22.3	23.3	24.3	25.8	27.8	29.3	30.3	32.8	35.4	38.4	42.9	46.4	50.4	54.4
2.16	15.2	16.7	17.7	18.7	21.3	23.3	24.3	25.3	26.8	28.8	30.3	31.3	33.8	36.3	39.3	43.8	47.3	51.3	55.3
2.18	16.7	18.2	19.2	20.2	22.7	24.7	25.7	26.7	28.2	30.2	31.7	32.7	35.2	37.7	40.8	45.3	48.8	52.8	56.8
2.20	12.4	13.9	14.9	15.9	18.5	20.5	21.5	22.5	24.0	26.0	27.6	28.6	31.1	33.6	36.6	41.1	44.6	48.6	52.6
2.22	10.6	12.2	13.2	14.2	16.8	18.8	19.9	20.9	22.4	24.4	25.9	26.9	29.5	32.0	35.0	39.5	43.0	47.0	51.0
2.23	16.0	17.5	18.5	19.5	22.1	24.1	25.1	26.1	27.6	29.6	31.1	32.1	34.6	37.1	40.1	44.6	48.1	52.1	56.1
2.27	15.4	16.9	17.9	18.9	21.4	23.4	24.4	25.4	26.9	28.9	30.4	31.5	34.0	36.5	39.5	44.0	47.5	51.5	55.5
2.30	10.7	12.3	13.3	14.4	16.9	19.0	20.0	21.0	22.5	24.6	26.1	27.1	29.6	32.1	35.1	39.7	43.2	47.2	51.2
2.36	14.5	16.0	17.0	18.1	20.6	22.6	23.6	24.6	26.1	28.1	29.6	30.6	33.1	35.7	38.7	43.2	46.7	50.7	54.7
2.36	16.2	17.7	18.7	19.7	22.2	24.2	25.2	26.2	27.7	29.7	31.2	32.2	34.8	37.3	40.3	44.8	48.3	52.3	56.3
2.39	10.9	12.4	13.5	14.5	17.1	19.1	20.1	21.2	22.7	24.7	26.2	27.2	29.7	32.3	35.3	39.8	43.3	47.3	51.3
2.40	15.5	17.0	18.0	19.0	21.6	23.6	24.6	25.6	27.1	29.1	30.6	31.6	34.1	36.6	39.6	44.1	47.6	51.6	55.6
2.40	12.6	14.2	15.2	16.2	18.8	20.8	21.8	22.8	24.3	26.3	27.8	28.9	31.4	33.9	36.9	41.4	44.9	48.9	52.9
2.43	9.4	11.0	12.0	13.1	15.7	17.8	18.8	19.8	21.3	23.4	24.9	25.9	28.4	30.9	34.0	38.5	42.0	46.0	50.0
2.48	14.6	16.2	17.2	18.2	20.7	22.7	23.8	24.8	26.3	28.3	29.8	30.8	33.3	35.8	38.8	43.3	46.8	50.8	54.8
2.49	11.0	12.6	13.6	14.7	17.2	19.3	20.3	21.3	22.8	24.8	26.4	27.4	29.9	32.4	35.4	39.9	43.5	47.5	51.5
2.51	12.8	14.3	15.3	16.4	18.9	20.9	21.9	23.0	24.5	26.5	28.0	29.0	31.5	34.0	37.0	41.6	45.1	49.1	53.1
2.52	9.5	11.1	12.2	13.2	15.8	17.9	18.9	19.9	21.5	23.5	25.0	26.0	28.6	31.1	34.1	38.6	42.2	46.2	50.2
2.54	15.6	17.2	18.2	19.2	21.7	23.7	24.7	25.7	27.2	29.2	30.7	31.8	34.3	36.8	39.8	44.3	47.8	51.8	55.8
2.57	---		9.9	11.0	13.7	15.8	16.8	17.9	19.4	21.5	23.0	24.0	26.6	29.1	32.1	36.7	40.2	44.2	48.3
2.62	14.8	16.3	17.3	18.3	20.9	22.9	23.9	24.9	26.4	28.4	29.9	30.9	33.4	36.0	39.0	43.5	47.0	51.0	55.0
2.62	9.6	11.2	12.3	13.4	16.0	18.0	19.1	20.1	21.6	23.6	25.2	26.2	28.7	31.2	34.3	38.8	42.3	46.3	50.3
2.63	12.9	14.4	15.5	16.5	19.0	21.1	22.1	23.1	24.6	26.6	28.1	29.1	31.7	34.2	37.2	41.7	45.2	49.2	53.2
2.67	---	---	---	---	13.1	15.2	16.2	17.3	18.8	20.9	22.5	23.5	26.0	28.6	31.6	36.2	39.7	43.7	47.7
2.70	11.3	12.8	13.9	14.9	17.5	19.5	20.6	21.6	23.1	25.1	26.6	27.7	30.2	32.7	35.7	40.2	43.8	47.8	51.8
	0.86	**0.88**	**0.89**	**0.90**	**0.93**	**0.94**	**0.96**	**0.97**	**0.99**	**1.00**	**1.01**	**1.02**	**1.04**	**1.05**	**1.07**	**1.10**	**1.12**	**1.14**	**1.16**
2.71	---	---	---	---	---	12.1	13.2	14.3	15.9	18.1	19.6	20.7	23.3	25.8	28.9	33.5	37.0	41.1	45.1
2.73	9.7	11.4	12.4	13.5	16.1	18.2	19.2	20.2	21.8	23.8	25.3	26.3	28.9	31.4	34.4	38.9	42.5	46.5	50.5
2.76	13.0	14.6	15.6	16.6	19.2	21.2	22.2	23.2	24.8	26.8	28.3	29.3	31.8	34.3	37.3	41.9	45.4	49.4	53.4
2.78	14.9	16.5	17.5	18.5	21.0	23.0	24.0	25.1	26.6	28.6	30.1	31.1	33.6	36.1	39.1	43.6	47.1	51.1	55.1
2.83	11.4	13.0	14.0	15.1	17.6	19.7	20.7	21.7	23.2	25.3	26.8	27.8	30.3	32.8	35.9	40.4	43.9	47.9	51.9
2.86	---	---	10.2	11.3	14.1	16.2	17.2	18.3	19.8	21.9	23.4	24.4	27.0	29.5	32.6	37.1	40.6	44.7	48.7
2.88	---	---	---	---	---	12.4	13.5	14.6	16.2	18.3	19.9	21.0	23.5	26.1	29.2	33.8	37.3	41.4	45.4
2.90	13.2	14.7	15.7	16.8	19.3	21.4	22.4	23.4	24.9	26.9	28.4	29.4	32.0	34.5	37.5	42.0	45.5	49.5	53.5
2.96	11.5	13.1	14.2	15.2	17.8	19.8	20.8	21.9	23.4	25.4	26.9	27.9	30.5	33.0	36.0	40.5	44.1	48.1	52.1
2.97	---	9.2	10.4	11.5	14.2	16.3	17.4	18.4	20.0	22.0	23.6	24.6	27.1	29.7	32.7	37.3	40.8	44.8	48.8
3.07	13.3	14.9	15.9	16.9	19.5	21.5	22.5	23.5	25.0	27.1	28.6	29.6	32.1	34.6	37.6	42.2	45.7	49.7	53.7
3.09	---	9.3	10.5	11.6	14.3	16.4	17.5	18.5	20.1	22.2	23.7	24.7	27.3	29.8	32.9	37.4	40.9	45.0	49.0
3.10	10.1	11.7	12.8	13.9	16.5	18.6	19.6	20.6	22.2	24.2	25.7	26.8	29.3	31.8	34.8	39.4	42.9	46.9	50.9
3.11	11.6	13.2	14.3	15.3	17.9	20.0	21.0	22.0	23.5	25.6	27.1	28.1	30.6	33.1	36.2	40.7	44.2	48.2	52.2
3.13	---	---	---	---	---	---	---	12.7	14.5	16.7	18.3	19.4	22.0	24.6	27.7	32.3	35.9	40.0	44.0
3.21	---	---	---	10.9	13.7	15.8	16.9	18.0	19.5	21.6	23.1	24.2	26.7	29.3	32.3	36.9	40.4	44.5	48.5
3.25	13.4	15.0	16.0	17.1	19.6	21.6	22.7	23.7	25.2	27.2	28.7	29.7	32.3	34.8	37.8	42.3	45.8	49.8	53.8
3.25	10.2	11.9	13.0	14.0	16.6	18.7	19.7	20.8	22.3	24.4	25.9	26.9	29.4	32.0	35.0	39.5	43.0	47.1	51.1
3.29	---	---	---	---	10.5	12.8	14.0	15.1	16.7	18.9	20.4	21.5	24.1	26.7	29.7	34.3	37.9	41.9	46.0
3.36	---	9.6	10.7	11.8	14.6	16.7	17.8	18.8	20.4	22.4	24.0	25.0	27.5	30.1	33.1	37.7	41.2	45.3	49.3
3.41	10.3	12.0	13.1	14.1	16.8	18.9	19.9	20.9	22.4	24.5	26.0	27.0	29.6	32.1	35.1	39.7	43.2	47.2	51.2
3.42	---	---	---	---	10.6	13.0	14.1	15.2	16.8	19.0	20.6	21.6	24.2	26.8	29.9	34.5	38.0	42.1	46.1
3.46	11.9	13.5	14.6	15.6	18.2	20.2	21.3	22.3	23.8	25.8	27.4	28.4	30.9	33.4	36.5	41.0	44.5	48.5	52.5
3.49	---	---	10.0	11.2	13.9	16.1	17.2	18.2	19.8	21.9	23.4	24.4	27.0	29.6	32.6	37.2	40.7	44.7	48.8
3.51	---	9.7	10.8	12.0	14.7	16.8	17.9	18.9	20.5	22.6	24.1	25.1	27.7	30.2	33.3	37.8	41.4	45.4	49.4
3.55	---	---	---	---	10.7	13.1	14.2	15.3	17.0	19.1	20.7	21.8	24.4	26.9	30.0	34.6	38.2	42.2	46.3
3.58	---	---	---	---	---	---	12.0	13.2	14.9	17.2	18.8	19.9	22.5	25.2	28.3	32.9	36.5	40.5	44.6
3.59	10.5	12.1	13.2	14.3	16.9	19.0	20.0	21.0	22.6	24.6	26.2	27.2	29.7	32.2	35.3	39.8	43.3	47.4	51.4
3.65	---	---	10.1	11.3	14.1	16.2	17.3	18.3	19.9	22.0	23.5	24.6	27.1	29.7	32.8	37.3	40.9	44.9	48.9
3.66	12.0	13.6	14.7	15.7	18.3	20.4	21.4	22.4	24.0	26.0	27.5	28.5	31.0	33.6	36.6	41.1	44.6	48.7	52.7
	0.83	**0.86**	**0.87**	**0.88**	**0.91**	**0.92**	**0.94**	**0.96**	**0.97**	**0.99**	**1.00**	**1.01**	**1.03**	**1.04**	**1.06**	**1.09**	**1.11**	**1.13**	**1.15**

NOTE: Selection program VIA-VISA available at www.ptwizard.com.

SELECTION

DODGE®

A	S-L CLASSIC

AX	CLASSIC COG

STOCK DRIVE SELECTIONS

Ratio	Stock Shv. Datum Diam.		3500 RPM Driver			1750 RPM Driver			1160 RPM Driver			Belt Size/Center Distance						
			Driven	HP Per Belt		Driven	HP Per Belt		Driven	HP Per Belt		A26	A31	A33	A35	A38	A42	A46
	Driver	Driven	RPM	A	AX	RPM	A	AX	RPM	A	AX	AX26	AX31	AX33	AX35	AX38	AX42	AX46
3.69	4.6	18.0	948	8.73	9.60	474	5.65	6.05	314	4.10	4.45	---	---	---	---	---	---	---
3.71	5.0	19.6	942	9.64	10.50	471	6.31	6.64	312	4.58	4.88	---	---	---	---	---	---	---
3.79	3.2	13.2	923	4.99	6.13	461	3.22	3.89	306	2.36	2.89	---	---	---	---	---	---	9.5
3.82	3.8	15.6	916	6.70	7.68	458	4.28	4.84	303	3.12	3.57	---	---	---	---	---	---	---
3.86	3.6	15.0	906	6.15	7.17	453	3.93	4.53	300	2.87	3.34	---	---	---	---	---	---	---
3.92	6.0	24.6	894	11.58	12.57	447	7.91	8.06	296	5.75	5.92	---	---	---	---	---	---	---
4.01	4.2	18.0	872	7.75	8.66	436	4.98	5.45	289	3.61	4.01	---	---	---	---	---	---	9.6
4.02	3.0	13.2	871	4.40	5.59	436	2.86	3.57	289	2.11	2.66	---	---	---	---	---	---	---
4.07	3.4	15.0	860	5.58	6.66	430	3.58	4.21	285	2.62	3.12	---	---	---	---	---	---	---
4.20	4.0	18.0	834	7.23	8.18	417	4.63	5.15	276	3.36	3.79	---	---	---	---	---	---	---
4.23	3.4	15.6	828	5.58	6.66	414	3.58	4.21	274	2.62	3.12	---	---	---	---	---	---	---
4.30	3.2	15.0	815	5.00	6.13	407	3.22	3.90	270	2.36	2.89	---	---	---	---	---	---	---
4.36	4.2	19.6	802	7.75	8.66	401	4.98	5.46	266	3.61	4.01	---	---	---	---	---	---	---
4.40	3.8	18.0	796	6.70	7.68	398	4.29	4.84	264	3.12	3.57	---	---	---	---	---	---	---
4.46	3.2	15.6	784	5.00	6.13	392	3.22	3.90	260	2.36	2.89	---	---	---	---	---	---	---
ARC-LENGTH CORRECTION FACTOR —>												**---**	**---**	**---**	**---**	**---**	**---**	**0.76**
4.48	5.2	24.6	782	10.07	10.94	391	6.64	6.93	259	4.82	5.09	---	---	---	---	---	---	---
4.55	3.0	15.0	769	4.40	5.60	385	2.86	3.57	255	2.11	2.66	---	---	---	---	---	---	---
4.56	4.0	19.6	767	7.23	8.18	384	4.63	5.15	254	3.37	3.79	---	---	---	---	---	---	---
4.62	3.6	18.0	758	6.15	7.18	379	3.94	4.53	251	2.87	3.35	---	---	---	---	---	---	---
4.64	5.0	24.6	754	9.65	10.51	377	6.32	6.64	250	4.58	4.88	---	---	---	---	---	---	---
4.73	3.0	15.6	740	4.40	5.60	370	2.86	3.57	245	2.11	2.66	---	---	---	---	---	---	---
4.78	3.8	19.6	732	6.70	7.68	366	4.29	4.84	243	3.12	3.57	---	---	---	---	---	---	---
4.82	4.8	24.6	726	9.20	10.06	363	5.99	6.35	241	4.34	4.67	---	---	---	---	---	---	---
4.86	3.4	18.0	720	5.58	6.66	360	3.58	4.22	239	2.62	3.12	---	---	---	---	---	---	---
5.01	5.6	29.6	698	10.87	11.78	349	7.29	7.50	231	5.29	5.51	---	---	---	---	---	---	---
5.02	3.6	19.6	697	6.15	7.18	349	3.94	4.53	231	2.87	3.35	---	---	---	---	---	---	---
5.13	3.2	18.0	682	5.00	6.14	341	3.22	3.90	226	2.36	2.89	---	---	---	---	---	---	---
5.29	3.4	19.6	662	5.58	6.66	331	3.58	4.22	219	2.62	3.12	---	---	---	---	---	---	---
5.37	5.2	29.6	651	10.08	10.94	326	6.64	6.93	216	4.82	5.09	---	---	---	---	---	---	---
5.44	3.0	18.0	644	4.40	5.60	322	2.86	3.57	213	2.11	2.66	---	---	---	---	---	---	---
ARC-LENGTH CORRECTION FACTOR —>												**---**	**---**	**---**	**---**	**---**	**---**	**---**
5.45	4.2	24.6	642	7.76	8.67	321	4.98	5.46	213	3.61	4.02	---	---	---	---	---	---	---
5.57	5.0	29.6	628	9.65	10.51	314	6.32	6.64	208	4.58	4.88	---	---	---	---	---	---	---
5.58	3.2	19.6	627	5.00	6.14	314	3.22	3.90	208	2.36	2.89	---	---	---	---	---	---	---
5.70	4.0	24.6	614	7.24	8.18	307	4.64	5.15	203	3.37	3.79	---	---	---	---	---	---	---
5.79	4.8	29.6	605	9.20	10.06	302	5.99	6.35	200	4.34	4.67	---	---	---	---	---	---	---
5.91	3.0	19.6	592	4.40	5.60	296	2.86	3.57	196	2.11	2.66	---	---	---	---	---	---	---
5.98	3.8	24.6	586	6.70	7.69	293	4.29	4.84	194	3.12	3.57	---	---	---	---	---	---	---
6.02	4.6	29.6	581	8.74	9.61	291	5.66	6.06	193	4.10	4.45	---	---	---	---	---	---	---
6.28	3.6	24.6	558	6.15	7.18	279	3.94	4.53	185	2.87	3.35	---	---	---	---	---	---	---
6.35	5.6	37.6	551	10.87	11.78	276	7.29	7.50	183	5.29	5.51	---	---	---	---	---	---	---
6.55	4.2	29.6	535	7.76	8.67	267	4.98	5.46	177	3.61	4.02	---	---	---	---	---	---	---
6.61	3.4	24.6	530	5.59	6.67	265	3.58	4.22	176	2.62	3.12	---	---	---	---	---	---	---
6.81	5.2	37.6	514	10.08	10.94	257	6.65	6.94	170	4.82	5.09	---	---	---	---	---	---	---
6.84	4.0	29.6	511	7.24	8.18	256	4.64	5.15	169	3.37	3.80	---	---	---	---	---	---	---
6.98	3.2	24.6	502	5.00	6.14	251	3.23	3.90	166	2.37	2.89	---	---	---	---	---	---	---
ARC-LENGTH CORRECTION FACTOR —>												**---**	**---**	**---**	**---**	**---**	**---**	**---**
7.06	5.0	37.6	496	9.65	10.51	248	6.32	6.65	164	4.58	4.88	---	---	---	---	---	---	---
7.17	3.8	29.6	488	6.70	7.69	244	4.29	4.84	162	3.12	3.57	---	---	---	---	---	---	---
7.33	4.8	37.6	477	9.21	10.07	239	5.99	6.35	158	4.34	4.67	---	---	---	---	---	---	---
7.39	3.0	24.6	474	4.41	5.60	237	2.86	3.58	157	2.11	2.66	---	---	---	---	---	---	---
7.53	3.6	29.6	465	6.15	7.18	232	3.94	4.53	154	2.87	3.35	---	---	---	---	---	---	---
7.63	4.6	37.6	459	8.74	9.61	229	5.66	6.06	152	4.10	4.45	---	---	---	---	---	---	---
7.93	3.4	29.6	441	5.59	6.67	221	3.58	4.22	146	2.62	3.12	---	---	---	---	---	---	---
8.29	4.2	37.6	422	7.76	8.67	211	4.98	5.46	140	3.61	4.02	---	---	---	---	---	---	---
8.37	3.2	29.6	418	5.00	6.14	209	3.23	3.90	139	2.37	2.89	---	---	---	---	---	---	---
8.67	4.0	37.6	404	7.24	8.19	202	4.64	5.15	134	3.37	3.80	---	---	---	---	---	---	---
8.87	3.0	29.6	395	4.41	5.60	197	2.87	3.58	131	2.11	2.66	---	---	---	---	---	---	---
9.09	3.8	37.6	385	6.71	7.69	193	4.29	4.85	128	3.12	3.57	---	---	---	---	---	---	---
9.54	3.6	37.6	367	6.16	7.18	183	3.94	4.53	122	2.87	3.35	---	---	---	---	---	---	---
10.05	3.4	37.6	348	5.59	6.67	174	3.58	4.22	115	2.62	3.12	---	---	---	---	---	---	---
10.61	3.2	37.6	330	5.01	6.14	165	3.23	3.90	109	2.37	2.89	---	---	---	---	---	---	---
11.24	3.0	37.6	311	4.41	5.60	156	2.87	3.58	103	2.11	2.66	---	---	---	---	---	---	---
ARC-LENGTH CORRECTION FACTOR —>												**---**	**---**	**---**	**---**	**---**	**---**	**---**

NOTE: Selection program VIA-VISA available at www.ptwizard.com.

DODGE®

A	S-L CLASSIC	AX	CLASSIC COG

STOCK DRIVE SELECTIONS

Ratio	Belt Size/Center Distance																		
	A48 AX48	A51 AX51	A53 AX53	A55 AX55	A60 AX60	A64 AX64	A66 AX66	A68 AX68	A71 AX71	A75 AX75	A78 AX78	A80 AX80	A85 AX85	A90 AX90	A96 AX96	A105 AX105	A112 AX112	A120 AX120	A128 AX128
3.69	---	---	---	---	10.8	13.2	14.3	15.5	17.1	19.2	20.8	21.9	24.5	27.1	30.2	34.8	38.3	42.4	46.4
3.71	---	---	---	---	---	---	12.1	13.3	15.1	17.3	18.9	20.0	22.7	25.3	28.4	33.0	36.6	40.7	44.7
3.79	10.6	12.3	13.3	14.4	17.0	19.1	20.2	21.2	22.7	24.8	26.3	27.3	29.9	32.4	35.4	40.0	43.5	47.5	51.5
3.82	---	---	10.2	11.4	14.2	16.4	17.4	18.5	20.1	22.1	23.7	24.7	27.3	29.8	32.9	37.5	41.0	45.0	49.1
3.86	---	9.9	11.1	12.2	15.0	17.1	18.2	19.2	20.8	22.8	24.4	25.4	28.0	30.5	33.6	38.1	41.7	45.7	49.7
3.92	---	---	---	---	---	---	---	---	---	---	---	13.4	16.5	19.4	22.7	27.6	31.2	35.4	39.5
4.01	---	---	---	---	11.1	13.5	14.6	15.7	17.4	19.5	21.1	22.1	24.8	27.4	30.4	35.0	38.6	42.7	46.7
4.02	10.7	12.4	13.5	14.5	17.2	19.3	20.3	21.3	22.9	24.9	26.4	27.5	30.0	32.5	35.6	40.1	43.6	47.7	51.7
4.07	---	10.0	11.2	12.3	15.1	17.2	18.3	19.3	20.9	23.0	24.5	25.5	28.1	30.7	33.7	38.3	41.8	45.8	49.9
4.20	---	---	---	---	11.2	13.6	14.7	15.8	17.5	19.6	21.2	22.3	24.9	27.5	30.6	35.2	38.7	42.8	46.9
4.23	---	9.2	10.5	11.6	14.4	16.6	17.7	18.7	20.3	22.4	24.0	25.0	27.6	30.1	33.2	37.7	41.3	45.3	49.4
4.30	8.3	10.1	11.3	12.5	15.2	17.4	18.4	19.5	21.0	23.1	24.7	25.7	28.2	30.8	33.8	38.4	41.9	46.0	50.0
4.36	---	---	---	---	---	11.4	12.6	13.8	15.6	17.8	19.4	20.5	23.2	25.8	28.9	33.6	37.2	41.2	45.3
4.40	---	---	---	---	11.3	13.7	14.8	16.0	17.6	19.8	21.4	22.4	25.0	27.6	30.7	35.3	38.9	43.0	47.0
4.46	---	9.3	10.6	11.8	14.6	16.7	17.8	18.9	20.5	22.5	24.1	25.1	27.7	30.3	33.3	37.9	41.4	45.5	49.5
	0.78	**0.79**	**0.80**	**0.81**	**0.82**	**0.83**	**0.85**	**0.85**	**0.87**	**0.91**	**0.92**	**0.94**	**0.97**	**0.99**	**1.02**	**1.05**	**1.07**	**1.10**	**1.12**
4.48	---	---	---	---	---	---	---	---	---	---	12.5	13.9	17.0	19.9	23.2	28.1	31.8	35.9	40.1
4.55	8.4	10.3	11.4	12.6	15.3	17.5	18.5	19.6	21.2	23.2	24.8	25.8	28.4	30.9	34.0	38.6	42.1	46.1	50.2
4.56	---	---	---	---	---	11.5	12.7	13.9	15.7	17.9	19.6	20.7	23.3	26.0	29.1	33.7	37.3	41.4	45.5
4.62	---	---	---	---	11.4	13.8	15.0	16.1	17.7	19.9	21.5	22.5	25.2	27.8	30.9	35.5	39.0	43.1	47.1
4.64	---	---	---	---	---	---	---	---	---	---	12.6	14.0	17.1	20.0	23.4	28.2	31.9	36.1	40.2
4.73	---	9.4	10.7	11.9	14.7	16.9	17.9	19.0	20.6	22.7	24.2	25.3	27.8	30.4	33.5	38.0	41.6	45.6	49.6
4.78	---	---	---	---		11.6	12.9	14.1	15.8	18.1	19.7	20.8	23.5	26.1	29.2	33.9	37.4	41.5	45.6
4.82	---	---	---	---	---	---	---	---	---		12.7	14.1	17.2	20.1	23.5	28.3	32.0	36.2	40.4
4.86	---	---	---		11.5	13.9	15.1	16.2	17.9	20.0	21.6	22.7	25.3	27.9	31.0	35.6	39.2	43.2	47.3
5.01	---	---	---	---	---	---	---	---	---	---	---	---	---	---	16.7	22.3	26.3	30.7	35.0
5.02	---	---	---	---	---	11.7	13.0	14.2	15.9	18.2	19.8	20.9	23.6	26.2	29.3	34.0	37.6	41.7	45.7
5.13	---	---	---	---	11.7	14.1	15.2	16.3	18.0	20.1	21.7	22.8	25.4	28.0	31.1	35.7	39.3	43.4	47.4
5.29	---	---	---	---	---	11.8	13.1	14.3	16.1	18.3	20.0	21.0	23.7	26.4	29.5	34.1	37.7	41.8	45.9
5.37	---	---	---	---	---	---	---	---	---	---	---	---	---	---	16.9	22.5	26.5	30.9	35.2
5.44	---	---	---	---	11.8	14.2	15.3	16.5	18.1	20.3	21.9	22.9	25.6	28.2	31.3	35.9	39.5	43.5	47.6
	0.78	**0.79**	**0.80**	**0.81**	**0.82**	**0.83**	**0.85**	**0.85**	**0.87**	**0.91**	**0.92**	**0.94**	**0.97**	**0.99**	**1.02**	**1.05**	**1.07**	**1.10**	**1.12**
5.45	---	---	---	---	---	---	---	---	---	---	13.1	14.4	17.6	20.5	23.9	28.7	32.4	36.6	40.8
5.57	---	---	---	---	---	11.9	13.2	14.4	16.2	18.4	---	---	---	---	17.1	22.6	26.7	31.1	35.3
5.58	---	---	---	---	---	---	---	---	---	---	20.1	21.2	23.8	26.5	29.6	34.3	37.9	42.0	46.0
5.70	---	---	---	---	---	---	---	---	---	---	13.2	14.6	17.7	20.6	24.0	28.9	32.6	36.8	40.9
5.79	---	---	---	---	---	---	---	---	---	---	---	---	---	---	17.2	22.8	26.8	31.2	35.5
5.91	---	---	---	---	---	12.1	13.3	14.5	16.3	18.6	20.2	21.3	24.0	26.6	29.8	34.4	38.0	42.1	46.2
5.98	---	---	---	---	---	---	---	---	---	---	13.3	14.7	17.8	20.7	24.1	29.0	32.7	36.9	41.0
6.02	---	---	---	---	---	---	---	---	---	---	---	---	---	---	17.3	22.9	26.9	31.3	35.6
6.28	---	---	---	---	---	---	---	---	---	---	13.4	14.8	17.9	20.9	24.2	29.1	32.8	37.0	41.2
6.35	---	---	---	---	---	---	---	---	---	---	---	---	---	---	---	---	---	20.5	25.8
6.55	---	---	---	---	---	---	---	---	---	---	---	---	---	---	17.5	23.1	27.1	31.6	35.9
6.61	---	---	---	---	---	---	---	---	---	---	13.5	14.9	18.1	21.0	24.4	29.2	33.0	37.2	41.3
6.81	---	---	---	---	---	---	---	---	---	---	---	---	---	---	---	---	---	20.7	26.0
6.84	---	---	---	---	---	---	---	---	---	---	---	---	---	---	17.6	23.3	27.3	31.7	36.0
6.98	---	---	---	---	---	---	---	---	---	---	13.6	15.0	18.2	21.1	24.5	29.4	33.1	37.3	41.4
	---	**---**	**---**	**---**	**---**	**0.76**	**0.76**	**0.78**	**0.83**	**0.87**	**0.89**	**0.91**	**0.94**	**0.97**	**1.00**	**1.04**	**1.06**	**1.09**	**1.11**
7.06	---	---	---	---	---	---	---	---	---	---	---	---	---	---	---	---	---	20.8	26.1
7.17	---	---	---	---	---	---	---	---	---	---	---	---	---	---	17.7	23.4	27.4	31.8	36.1
7.33	---	---	---	---	---	---	---	---	---	---	---	---	---	---	---	---	---	20.9	26.2
7.39	---	---	---	---	---	---	---	---	---	11.3	13.7	15.1	18.3	21.2	24.6	29.5	33.2	37.4	41.6
7.53	---	---	---	---	---	---	---	---	---	---	---	---	---	---	17.9	23.5	27.5	31.9	36.3
7.63	---	---	---	---	---	---	---	---	---	---	---	---	---	---	---	---	---	21.1	26.4
7.93	---	---	---	---	---	---	---	---	---	---	---	---	---	---	18.0	23.6	27.6	32.1	36.4
8.29	---	---	---	---	---	---	---	---	---	---	---	---	---	---	---	---	---	21.3	26.6
8.37	---	---	---	---	---	---	---	---	---	---	---	---	---	---	18.1	23.7	27.8	32.2	36.5
8.67	---	---	---	---	---	---	---	---	---	---	---	---	---	---	---	---	---	21.4	26.7
8.87	---	---	---	---	---	---	---	---	---	---	---	---	---	---	18.2	23.9	27.9	32.3	36.6
9.09	---	---	---	---	---	---	---	---	---	---	---	---	---	---	---	---	---	21.5	26.8
9.54	---	---	---	---	---	---	---	---	---	---	---	---	---	---	---	---	---	21.6	26.9
10.05	---	---	---	---	---	---	---	---	---	---	---	---	---	---	---	---	---	21.7	27.1
10.61	---	---	---	---	---	---	---	---	---	---	---	---	---	---	---	---	---	21.9	27.2
11.24	---	---	---	---	---	---	---	---	---	---	---	---	---	---	---	---	---	22.0	27.3
	---	**---**	**---**	**---**	**---**	**---**	**---**	**---**	**---**	**0.75**	**0.77**	**0.80**	**0.82**	**0.88**	**0.93**	**0.99**	**1.02**	**1.05**	**1.08**

NOTE: Selection program VIA-VISA available at www.ptwizard.com.

SELECTION

DODGE®

B S-L CLASSIC | **BX** CLASSIC COG

STOCK DRIVE SELECTIONS

Ratio	Stock Shv. Datum Diam.		3500 RPM Driver			1750 RPM Driver			1160 RPM Driver			Belt Size/Center Distance							
			Driven	HP Per Belt		Driven	HP Per Belt		Driven	HP Per Belt		B35	B38	B42	B46	B51	B55	B60	B64
	Driver	Driven	RPM	B	BX	RPM	B	BX	RPM	B	BX	BX35	BX38	BX42	BX46	BX51	BX55	BX60	BX64
1.00	3.40	3.40	3500	1.41	7.30	1750	1.95	4.99	1160	1.67	3.74	13.1	14.6	16.6	18.6	21.1	23.1	25.6	27.6
1.00	3.80	3.80	3500	3.20	8.67	1750	3.07	5.90	1160	2.47	4.40	12.4	13.9	15.9	17.9	20.4	22.4	24.9	26.9
1.00	4.20	4.20	3500	4.88	9.94	1750	4.18	6.78	1160	3.26	5.05	11.8	13.3	15.3	17.3	19.8	21.8	24.3	26.3
1.00	4.60	4.60	3500	6.45	11.11	1750	5.26	7.65	1160	4.03	5.68	11.2	12.7	14.7	16.7	19.2	21.2	23.7	25.7
1.00	5.00	5.00	3500	7.90	12.17	1750	6.32	8.49	1160	4.80	6.31	10.6	12.1	14.1	16.1	18.6	20.6	23.1	25.1
1.00	5.20	5.20	3500	8.58	12.66	1750	6.84	8.90	1160	5.18	6.62	10.2	11.7	13.7	15.7	18.2	20.2	22.7	24.7
1.00	5.40	5.40	3500	9.23	13.12	1750	7.36	9.31	1160	5.56	6.92	9.9	11.4	13.4	15.4	17.9	19.9	22.4	24.4
1.00	5.60	5.60	3500	9.85	13.55	1750	7.87	9.71	1160	5.94	7.22	9.6	11.1	13.1	15.1	17.6	19.6	22.1	24.1
1.00	6.00	6.00	3500	10.97	14.33	1750	8.87	10.49	1160	6.68	7.82	9.0	10.5	12.5	14.5	17.0	19.0	21.5	23.5
1.00	6.40	6.40	3500	11.96	14.99	1750	9.85	11.26	1160	7.41	8.41	8.4	9.9	11.9	13.9	16.4	18.4	20.9	22.9
1.00	6.80	6.80	3500	12.80	15.51	1750	10.81	11.99	1160	8.14	8.99	7.7	9.2	11.2	13.2	15.7	17.7	20.2	22.2
1.00	7.40	7.40	3500	---	---	1750	12.19	13.06	1160	9.20	9.84	---	8.3	10.3	12.3	14.8	16.8	19.3	21.3
1.00	8.60	8.60	3500	---	---	1750	14.79	15.03	1160	11.27	11.47	---	---	---	10.4	12.9	14.9	17.4	19.4
1.00	9.40	9.40	3500	---	---	1750	16.38	16.22	1160	12.59	12.50	---	---	---	---	11.6	13.6	16.1	18.1
1.03	6.80	7.00	3405	13.01	15.72	1702	10.91	12.10	1128	8.20	9.06	7.6	9.1	11.1	13.1	15.6	17.6	20.1	22.1
1.03	6.00	6.20	3393	11.21	14.57	1697	8.99	10.61	1125	6.76	7.90	8.8	10.3	12.3	14.3	16.8	18.8	21.3	23.3
1.03	5.40	5.60	3383	9.49	13.38	1691	7.49	9.43	1121	5.65	7.01	9.8	11.3	13.3	15.3	17.8	19.8	22.3	24.3
1.04	5.20	5.40	3378	8.85	12.92	1689	6.98	9.03	1120	5.27	6.70	10.1	11.6	13.6	15.6	18.1	20.1	22.6	24.6
1.04	4.60	4.80	3364	6.75	11.40	1682	5.41	7.79	1115	4.13	5.78	11.0	12.5	14.5	16.5	19.0	21.0	23.5	25.5
1.04	4.20	4.40	3353	5.20	10.25	1676	4.34	6.94	1111	3.36	5.15	11.6	13.1	15.1	17.1	19.6	21.6	24.1	26.1
1.05	4.00	4.20	3346	4.38	9.64	1673	3.79	6.51	1109	2.97	4.83	12.0	13.5	15.5	17.5	20.0	22.0	24.5	26.5
1.05	3.60	3.80	3332	2.68	8.36	1666	2.69	5.62	1104	2.19	4.19	12.6	14.1	16.1	18.1	20.6	22.6	25.1	27.1
1.05	3.40	3.60	3323	1.79	7.68	1662	2.13	5.18	1101	1.79	3.87	12.9	14.4	16.4	18.4	20.9	22.9	25.4	27.4
1.06	6.40	6.80	3304	12.37	15.40	1652	10.06	11.46	1095	7.55	8.55	8.0	9.5	11.5	13.5	16.0	18.0	20.5	22.5
1.06	6.00	6.40	3293	11.41	14.77	1646	9.09	10.71	1091	6.82	7.97	8.7	10.2	12.2	14.2	16.7	18.7	21.2	23.2
1.07	5.60	6.00	3280	10.30	14.01	1640	8.10	9.94	1087	6.09	7.38	9.3	10.8	12.8	14.8	17.3	19.3	21.8	23.8
1.07	5.00	5.40	3257	8.40	12.67	1628	6.57	8.74	1079	4.97	6.47	10.2	11.7	13.7	15.7	18.2	20.2	22.7	24.7
1.08	7.40	8.00	3249	---	---	1624	12.45	13.32	1077	9.37	10.01	---	7.8	9.8	11.8	14.3	16.3	18.8	20.8
1.08	4.60	5.00	3239	6.99	11.64	1619	5.53	7.91	1073	4.21	5.86	10.9	12.4	14.4	16.4	18.9	20.9	23.4	25.4
1.09	8.60	9.40	3213	---	---	1607	15.08	15.32	1065	11.46	11.66	---	---	---	9.8	12.3	14.3	16.8	18.8
1.09	4.00	4.40	3206	4.65	9.91	1603	3.92	6.64	1063	3.06	4.92	11.8	13.3	15.3	17.3	19.8	21.8	24.3	26.3
1.09	6.00	6.60	3198	11.58	14.94	1599	9.17	10.79	1060	6.88	8.02	8.5	10.0	12.0	14.0	16.5	18.5	21.0	23.0
1.10	5.60	6.20	3180	10.48	14.19	1590	8.19	10.03	1054	6.15	7.43	9.1	10.6	12.6	14.6	17.1	19.1	21.6	23.6
1.10	3.60	4.00	3179	2.96	8.63	1589	2.83	5.76	1054	2.28	4.28	12.4	13.9	15.9	17.9	20.4	22.4	24.9	26.9
1.11	3.40	3.80	3163	2.07	7.96	1582	2.28	5.32	1048	1.89	3.96	12.7	14.2	16.2	18.2	20.7	22.7	25.2	27.2
ARC-LENGTH CORRECTION FACTOR —>												**0.76**	**0.78**	**0.81**	**0.83**	**0.86**	**0.88**	**0.90**	**0.92**
1.11	5.20	5.80	3159	9.25	13.33	1580	7.18	9.24	1047	5.41	6.84	9.8	11.3	13.3	15.3	17.8	19.8	22.3	24.3
1.12	4.60	5.20	3122	7.18	11.84	1561	5.63	8.01	1035	4.28	5.93	10.7	12.2	14.2	16.2	18.7	20.7	23.2	25.2
1.13	6.00	6.80	3109	11.72	15.08	1554	9.25	10.87	1030	6.93	8.07	8.3	9.8	11.8	13.8	16.3	18.3	20.8	22.8
1.13	4.20	4.80	3093	5.66	10.71	1547	4.57	7.17	1025	3.51	5.30	11.3	12.8	14.8	16.8	19.3	21.3	23.8	25.8
1.13	5.60	6.40	3086	10.63	14.34	1543	8.26	10.10	1023	6.20	7.48	9.0	10.5	12.5	14.5	17.0	19.0	21.5	23.5
1.14	5.40	6.20	3073	10.04	13.93	1537	7.76	9.71	1019	5.83	7.19	9.3	10.8	12.8	14.8	17.3	19.3	21.8	23.8
1.14	3.80	4.40	3059	4.03	9.49	1529	3.49	6.31	1014	2.74	4.67	12.0	13.5	15.5	17.5	20.0	22.0	24.5	26.5
1.15	5.00	5.80	3045	8.75	13.01	1523	6.74	8.91	1009	5.08	6.59	9.9	11.4	13.4	15.4	17.9	19.9	22.4	24.4
1.15	3.60	4.20	3039	3.17	8.85	1520	2.94	5.87	1007	2.35	4.36	12.3	13.8	15.8	17.8	20.3	22.3	24.8	26.8
1.15	7.40	8.60	3031	---	---	1516	12.63	13.49	1005	9.49	10.12	---	---	9.3	11.3	13.8	15.8	18.3	20.3
1.16	6.00	7.00	3024	11.85	15.21	1512	9.31	10.93	1002	6.97	8.11	8.2	9.7	11.7	13.7	16.2	18.2	20.7	22.7
1.16	3.40	4.00	3018	2.30	8.19	1509	2.39	5.43	1000	1.96	4.03	12.6	14.1	16.1	18.1	20.6	22.6	25.1	27.1
1.16	9.40	11.00	3007	---	---	1504	16.83	16.67	997	12.89	12.80	---	---	---	---	10.4	12.4	14.9	16.9
1.17	6.80	8.00	2998	13.71	16.43	1499	11.26	12.45	993	8.44	9.29	---	8.3	10.3	12.3	14.8	16.8	19.3	21.3
1.17	5.40	6.40	2982	10.17	14.06	1491	7.83	9.77	988	5.87	7.23	9.1	10.6	12.6	14.6	17.1	19.1	21.6	23.6
1.18	5.20	6.20	2966	9.54	13.61	1483	7.32	9.38	983	5.50	6.93	9.4	10.9	12.9	14.9	17.4	19.4	21.9	23.9
1.18	4.00	4.80	2957	5.02	10.28	1479	4.11	6.83	980	3.18	5.05	11.5	13.0	15.0	17.0	19.5	21.5	24.0	26.0
1.19	5.00	6.00	2950	8.88	13.15	1475	6.81	8.98	978	5.13	6.63	9.8	11.3	13.3	15.3	17.8	19.8	22.3	24.3
1.19	3.80	4.60	2935	4.19	9.66	1468	3.57	6.39	973	2.80	4.73	11.8	13.3	15.3	17.3	19.8	21.8	24.3	26.3
1.20	5.60	6.80	2913	10.87	14.58	1457	8.38	10.22	966	6.27	7.56	8.6	10.1	12.2	14.2	16.7	18.7	21.2	23.2
1.20	4.60	5.60	2913	7.48	12.13	1456	5.77	8.16	965	4.37	6.02	10.4	11.9	13.9	15.9	18.4	20.4	22.9	24.9
1.20	3.60	4.40	2912	3.34	9.02	1456	3.02	5.96	965	2.41	4.41	12.1	13.6	15.6	17.6	20.1	22.1	24.6	26.6
1.21	5.40	6.60	2897	10.27	14.16	1448	7.88	9.83	960	5.91	7.27	9.0	10.5	12.5	14.5	17.0	19.0	21.5	23.5
1.21	3.40	4.20	2886	2.47	8.36	1443	2.47	5.52	956	2.02	4.09	12.4	13.9	15.9	17.9	20.4	22.4	24.9	26.9
1.22	4.20	5.20	2871	5.96	11.01	1435	4.72	7.32	951	3.61	5.40	11.0	12.5	14.5	16.5	19.0	21.0	23.5	25.5
ARC-LENGTH CORRECTION FACTOR —>												**0.75**	**0.77**	**0.80**	**0.82**	**0.85**	**0.87**	**0.89**	**0.90**

NOTE: Selection program VIA-VISA available at www.ptwizard.com.

DODGE®

B	S-L CLASSIC	BX	CLASSIC COG

STOCK DRIVE SELECTIONS

Ratio	Belt Size/Center Distance																	
	B68 BX68	B75 BX75	B81 BX81	B85 BX85	B90 BX90	B97 BX97	B105 BX105	B112 BX112	B120 BX120	B128 BX128	B144 BX144	B158 BX158	B173 BX173	B180 BX180	B195 BX195	B210 BX210	B240 BX240	B270 BX270
1.00	29.6	33.1	36.1	38.1	40.6	44.1	48.1	51.6	55.6	59.6	67.6	74.6	82.1	85.6	93.1	100.6	114.8	129.8
1.00	28.9	32.4	35.4	37.4	39.9	43.4	47.4	50.9	54.9	58.9	66.9	73.9	81.4	84.9	92.4	99.9	114.2	129.2
1.00	28.3	31.8	34.8	36.8	39.3	42.8	46.8	50.3	54.3	58.3	66.3	73.3	80.8	84.3	91.8	99.3	113.6	128.6
1.00	27.7	31.2	34.2	36.2	38.7	42.2	46.2	49.7	53.7	57.7	65.7	72.7	80.2	83.7	91.2	98.7	112.9	127.9
1.00	27.1	30.6	33.5	35.5	38.0	41.5	45.5	49.0	53.0	57.0	65.0	72.0	79.5	83.0	90.5	98.0	112.3	127.3
1.00	26.7	30.2	33.2	35.2	37.7	41.2	45.2	48.7	52.7	56.7	64.7	71.7	79.2	82.7	90.2	97.7	112.0	127.0
1.00	26.4	29.9	32.9	34.9	37.4	40.9	44.9	48.4	52.4	56.4	64.4	71.4	78.9	82.4	89.9	97.4	111.7	126.7
1.00	26.1	29.6	32.6	34.6	37.1	40.6	44.6	48.1	52.1	56.1	64.1	71.1	78.6	82.1	89.6	97.1	111.4	126.4
1.00	25.5	29.0	32.0	34.0	36.5	40.0	44.0	47.5	51.5	55.5	63.5	70.5	78.0	81.5	89.0	96.5	110.7	125.7
1.00	24.9	28.4	31.4	33.4	35.9	39.4	43.4	46.9	50.9	54.9	62.9	69.9	77.4	80.9	88.4	95.9	110.1	125.1
1.00	24.2	27.7	30.7	32.7	35.2	38.7	42.7	46.2	50.2	54.2	62.2	69.2	76.7	80.2	87.7	95.2	109.5	124.5
1.00	23.3	26.8	29.8	31.8	34.3	37.8	41.8	45.3	49.3	53.3	61.3	68.3	75.8	79.3	86.8	94.3	108.5	123.5
1.00	21.4	24.9	27.9	29.9	32.4	35.9	39.9	43.4	47.4	51.4	59.4	66.4	73.9	77.4	84.9	92.4	106.6	121.6
1.00	20.1	23.6	26.6	28.6	31.1	34.6	38.6	42.1	46.1	50.1	58.1	65.1	72.6	76.1	83.6	91.1	105.4	120.4
1.03	24.1	27.6	30.6	32.6	35.1	38.6	42.6	46.1	50.1	54.1	62.1	69.1	76.6	80.1	87.6	95.1	109.3	124.3
1.03	25.3	28.8	31.8	33.8	36.3	39.8	43.8	47.3	51.3	55.3	63.3	70.3	77.8	81.3	88.8	96.3	110.6	125.6
1.03	26.3	29.8	32.8	34.8	37.3	40.8	44.8	48.3	52.3	56.3	64.3	71.3	78.8	82.3	89.8	97.3	111.5	126.5
1.04	26.6	30.1	33.1	35.1	37.6	41.1	45.1	48.6	52.6	56.6	64.6	71.6	79.1	82.6	90.1	97.6	111.8	126.8
1.04	27.5	31.0	34.0	36.0	38.5	42.0	46.0	49.5	53.5	57.5	65.5	72.5	80.0	83.5	91.0	98.5	112.8	127.8
1.04	28.1	31.6	34.6	36.6	39.1	42.6	46.6	50.1	54.1	58.1	66.1	73.1	80.6	84.1	91.6	99.1	113.4	128.4
1.05	28.5	32.0	35.0	37.0	39.5	43.0	47.0	50.5	54.5	58.5	66.5	73.5	81.0	84.5	92.0	99.5	113.7	128.7
1.05	29.1	32.6	35.6	37.6	40.1	43.6	47.6	51.1	55.1	59.1	67.1	74.1	81.6	85.1	92.6	100.1	114.3	129.3
1.05	29.4	32.9	35.9	37.9	40.4	43.9	47.9	51.4	55.4	59.4	67.4	74.4	81.9	85.4	92.9	100.4	114.7	129.7
1.06	24.5	28.0	31.0	33.0	35.5	39.0	43.0	46.5	50.5	54.5	62.5	69.5	77.0	80.5	88.0	95.5	109.8	124.8
1.06	25.2	28.7	31.7	33.7	36.2	39.7	43.7	47.2	51.2	55.2	63.2	70.2	77.7	81.2	88.7	96.2	110.4	125.4
1.07	25.8	29.3	32.3	34.3	36.8	40.3	44.3	47.8	51.8	55.8	63.8	70.8	78.3	81.8	89.3	96.8	111.0	126.0
1.07	26.7	30.2	33.2	35.2	37.7	41.2	45.2	48.7	52.7	56.7	64.7	71.7	79.2	82.7	90.2	97.7	112.0	127.0
1.08	22.8	26.3	29.3	31.3	33.8	37.3	41.3	44.8	48.8	52.8	60.8	67.8	75.3	78.8	86.3	93.8	108.1	123.1
1.08	27.4	30.9	33.9	35.9	38.4	41.9	45.9	49.4	53.4	57.4	65.4	72.4	79.9	83.4	90.9	98.4	112.6	127.6
1.09	20.8	24.3	27.3	29.3	31.8	35.3	39.3	42.8	46.8	50.8	58.8	65.8	73.3	76.8	84.3	91.8	106.0	121.0
1.09	28.3	31.8	34.8	36.8	39.3	42.8	46.8	50.3	54.3	58.3	66.3	73.3	80.8	84.3	91.8	99.3	113.6	128.6
1.09	25.0	28.5	31.5	33.5	36.0	39.5	43.5	47.0	51.0	55.0	63.0	70.0	77.5	81.0	88.5	96.0	110.3	125.3
1.10	25.6	29.1	32.1	34.1	36.6	40.1	44.1	47.6	51.6	55.6	63.6	70.6	78.1	81.6	89.1	96.6	110.9	125.9
1.10	28.9	32.4	35.4	37.4	39.9	43.4	47.4	50.9	54.9	58.9	66.9	73.9	81.4	84.9	92.4	99.9	114.2	129.2
1.11	29.2	32.7	35.7	37.7	40.2	43.7	47.7	51.2	55.2	59.2	67.2	74.2	81.7	85.2	92.7	100.2	114.5	129.5
	0.93	**0.95**	**0.97**	**0.98**	**1.00**	**1.02**	**1.04**	**1.05**	**1.07**	**1.09**	**1.12**	**1.14**	**1.16**	**1.17**	**1.19**	**1.21**	**1.24**	**1.27**
1.11	26.3	29.8	32.8	34.8	37.3	40.8	44.8	48.3	52.3	56.3	64.3	71.3	78.8	82.3	89.8	97.3	111.5	126.5
1.12	27.2	30.7	33.7	35.7	38.2	41.7	45.7	49.2	53.2	57.2	65.2	72.2	79.7	83.2	90.7	98.2	112.5	127.5
1.13	24.8	28.3	31.3	33.3	35.8	39.3	43.4	46.9	50.9	54.9	62.9	69.9	77.4	80.9	88.4	95.9	110.1	125.1
1.13	27.8	31.3	34.3	36.3	38.8	42.3	46.3	49.8	53.8	57.8	65.8	72.8	80.3	83.8	91.3	98.8	113.1	128.1
1.13	25.5	29.0	32.0	34.0	36.5	40.0	44.0	47.5	51.5	55.5	63.5	70.5	78.0	81.5	89.0	96.5	110.7	125.7
1.14	25.8	29.3	32.3	34.3	36.8	40.3	44.3	47.8	51.8	55.8	63.8	70.8	78.3	81.8	89.3	96.8	111.0	126.0
1.14	28.5	32.0	35.0	37.0	39.5	43.0	47.0	50.5	54.5	58.5	66.5	73.5	81.0	84.5	92.0	99.5	113.7	128.7
1.15	26.4	29.9	32.9	34.9	37.4	40.9	44.9	48.4	52.4	56.4	64.4	71.4	78.9	82.4	89.9	97.4	111.7	126.7
1.15	28.8	32.3	35.3	37.3	39.8	43.3	47.3	50.8	54.8	58.8	66.8	73.8	81.3	84.8	92.3	99.8	114.0	129.0
1.15	22.3	25.8	28.8	30.8	33.3	36.8	40.8	44.3	48.3	52.3	60.3	67.3	74.8	78.3	85.8	93.3	107.6	122.6
1.16	24.7	28.2	31.2	33.2	35.7	39.2	43.2	46.7	50.7	54.7	62.7	69.7	77.2	80.7	88.2	95.7	109.9	124.9
1.16	29.1	32.6	35.6	37.6	40.1	43.6	47.6	51.1	55.1	59.1	67.1	74.1	81.6	85.1	92.6	100.1	114.3	129.3
1.16	18.9	22.4	25.4	27.4	29.9	33.4	37.4	40.9	44.9	48.9	56.9	63.9	71.4	74.9	82.4	89.9	104.1	119.1
1.17	23.3	26.8	29.8	31.8	34.3	37.8	41.8	45.3	49.3	53.3	61.3	68.3	75.8	79.3	86.8	94.3	108.5	123.5
1.17	25.6	29.1	32.1	34.1	36.6	40.1	44.1	47.6	51.6	55.6	63.6	70.6	78.1	81.6	89.1	96.6	110.9	125.9
1.18	25.9	29.4	32.4	34.4	36.9	40.4	44.4	47.9	51.9	55.9	63.9	70.9	78.4	81.9	89.4	96.9	111.2	126.2
1.18	28.0	31.5	34.5	36.5	39.0	42.5	46.5	50.0	54.0	58.0	66.0	73.0	80.5	84.0	91.5	99.0	113.2	128.2
1.19	26.3	29.8	32.8	34.8	37.3	40.8	44.8	48.3	52.3	56.3	64.3	71.3	78.8	82.3	89.8	97.3	111.5	126.5
1.19	28.3	31.8	34.8	36.8	39.3	42.8	46.8	50.3	54.3	58.3	66.3	73.3	80.8	84.3	91.8	99.3	113.6	128.6
1.20	25.2	28.7	31.7	33.7	36.2	39.7	43.7	47.2	51.2	55.2	63.2	70.2	77.7	81.2	88.7	96.2	110.4	125.4
1.20	26.9	30.4	33.4	35.4	37.9	41.4	45.4	48.9	52.9	56.9	64.9	71.9	79.4	82.9	90.4	97.9	112.1	127.1
1.20	28.6	32.1	35.1	37.1	39.6	43.1	47.1	50.6	54.6	58.6	66.6	73.6	81.1	84.6	92.1	99.6	113.9	128.9
1.21	25.5	29.0	32.0	34.0	36.5	40.0	44.0	47.5	51.5	55.5	63.5	70.5	78.0	81.5	89.0	96.5	110.7	125.7
1.21	28.9	32.4	35.4	37.4	39.9	43.4	47.4	50.9	54.9	58.9	66.9	73.9	81.4	84.9	92.4	99.9	114.2	129.2
1.22	27.5	31.0	34.0	36.0	38.5	42.0	46.0	49.5	53.5	57.5	65.5	72.5	80.0	83.5	91.0	98.5	112.8	127.8
	0.92	**0.95**	**0.97**	**0.98**	**0.99**	**1.01**	**1.03**	**1.05**	**1.07**	**1.08**	**1.11**	**1.14**	**1.16**	**1.17**	**1.19**	**1.21**	**1.24**	**1.27**

NOTE: Selection program VIA-VISA available at www.ptwizard.com.

SELECTION

DODGE®

B S-L CLASSIC | **BX** CLASSIC COG

STOCK DRIVE SELECTIONS

Ratio	Stock Shv. Datum Diam.		3500 RPM Driver			1750 RPM Driver			1160 RPM Driver			Belt Size/Center Distance							
			Driven	HP Per Belt		Driven	HP Per Belt		Driven	HP Per Belt		B35	B38	B42	B46	B51	B55	B60	B64
	Driver	Driven	RPM	B	BX	RPM	B	BX	RPM	B	BX	BX35	BX38	BX42	BX46	BX51	BX55	BX60	BX64
1.22	6.00	7.40	2869	12.05	15.41	1434	9.41	11.03	951	7.04	8.18	7.8	9.4	11.4	13.4	15.9	17.9	20.4	22.4
1.22	5.00	6.20	2860	8.99	13.26	1430	6.86	9.03	948	5.16	6.67	9.6	11.1	13.1	15.1	17.6	19.6	22.1	24.1
1.23	4.00	5.00	2847	5.16	10.42	1424	4.18	6.89	944	3.23	5.09	11.3	12.8	14.8	16.8	19.3	21.3	23.8	25.8
1.23	5.60	7.00	2834	10.96	14.67	1417	8.43	10.27	939	6.31	7.59	8.5	10.0	12.0	14.0	16.5	18.5	21.0	23.0
1.24	6.40	8.00	2830	13.08	16.11	1415	10.41	11.81	938	7.78	8.78	---	8.6	10.6	12.6	15.1	17.1	19.6	21.6
1.24	3.80	4.80	2822	4.33	9.80	1411	3.64	6.46	935	2.84	4.77	11.6	13.1	15.1	17.1	19.6	21.6	24.1	26.1
1.24	4.60	5.80	2818	7.59	12.24	1409	5.83	8.21	934	4.41	6.06	10.2	11.7	13.7	15.7	18.2	20.2	22.7	24.7
1.24	5.40	6.80	2816	10.37	14.26	1408	7.93	9.87	933	5.94	7.30	8.8	10.3	12.3	14.3	16.8	18.8	21.3	23.3
1.25	6.80	8.60	2797	13.95	16.67	1398	11.38	12.57	927	8.52	9.37	---	7.8	9.8	11.8	14.3	16.3	18.8	20.8
1.25	5.20	6.60	2796	9.74	13.82	1398	7.42	9.48	927	5.57	7.00	9.1	10.6	12.6	14.6	17.1	19.1	21.6	23.6
1.25	3.60	4.60	2794	3.48	9.16	1397	3.09	6.02	926	2.45	4.46	12.0	13.5	15.5	17.5	20.0	22.0	24.5	26.5
1.26	7.40	9.40	2783	---	---	1391	12.78	13.65	922	9.59	10.22	---	---	8.7	10.7	13.2	15.2	17.7	19.7
1.26	5.00	6.40	2775	9.08	13.35	1388	6.91	9.08	920	5.19	6.70	9.4	10.9	12.9	14.9	17.4	19.4	21.9	23.9
1.26	4.20	5.40	2771	6.07	11.12	1385	4.77	7.38	918	3.65	5.44	10.8	12.3	14.4	16.4	18.9	20.9	23.4	25.4
1.27	8.60	11.00	2761	---	---	1380	15.39	15.63	915	11.66	11.86	---	---	---	---	10.9	13.0	15.5	17.5
1.28	4.60	6.00	2730	7.68	12.33	1365	5.87	8.26	905	4.44	6.09	10.1	11.6	13.6	15.6	18.1	20.1	22.6	24.6
1.29	5.20	6.80	2718	9.82	13.89	1359	7.46	9.52	901	5.59	7.03	8.9	10.4	12.5	14.5	17.0	19.0	21.5	23.5
1.29	3.80	5.00	2716	4.44	9.91	1358	3.69	6.52	900	2.88	4.81	11.5	13.0	15.0	17.0	19.5	21.5	24.0	26.0
1.30	5.60	7.40	2688	11.11	14.82	1344	8.50	10.34	891	6.35	7.64	8.1	9.7	11.7	13.7	16.2	18.2	20.7	22.7
1.31	4.20	5.60	2678	6.15	11.21	1339	4.81	7.42	888	3.68	5.47	10.7	12.2	14.2	16.2	18.7	20.7	23.2	25.2
1.31	9.40	12.40	2677	---	---	1339	17.02	16.86	887	13.01	12.93	---	---	---	---	---	11.2	13.7	15.7
1.31	6.00	8.00	2663	12.26	15.62	1331	9.52	11.14	882	7.11	8.25	7.3	8.9	10.9	12.9	15.4	17.4	19.9	21.9
1.32	3.40	4.60	2653	2.71	8.60	1327	2.59	5.64	879	2.10	4.17	12.1	13.6	15.6	17.6	20.1	22.1	24.6	26.6
1.32	4.60	6.20	2646	7.75	12.41	1323	5.91	8.30	877	4.47	6.11	9.9	11.4	13.4	15.4	17.9	19.9	22.4	24.4
1.33	6.40	8.60	2641	13.27	16.29	1320	10.50	11.91	875	7.84	8.84	---	8.0	10.1	12.1	14.6	16.6	19.1	21.1
1.34	5.00	6.80	2620	9.23	13.49	1310	6.98	9.15	868	5.24	6.75	9.1	10.6	12.6	14.6	17.1	19.1	21.6	23.6
1.35	5.40	7.40	2598	10.57	14.46	1299	8.03	9.98	861	6.01	7.37	8.3	9.8	11.8	13.8	16.3	18.3	20.8	22.8
1.35	4.20	5.80	2591	6.23	11.28	1295	4.85	7.46	859	3.70	5.49	10.5	12.0	14.0	16.0	18.5	20.5	23.0	25.0
1.36	4.60	6.40	2568	7.82	12.47	1284	5.94	8.33	851	4.49	6.14	9.7	11.2	13.2	15.2	17.7	19.7	22.2	24.2
1.36	6.80	9.40	2568	14.16	16.88	1284	11.49	12.68	851	8.59	9.44	---	---	9.1	11.1	13.6	15.6	18.1	20.1
1.37	3.40	4.80	2550	2.79	8.68	1275	2.63	5.68	845	2.12	4.20	11.9	13.4	15.4	17.4	20.0	22.0	24.5	26.5
1.37	5.00	7.00	2549	9.28	13.55	1274	7.01	9.18	845	5.26	6.76	8.9	10.4	12.4	14.4	17.0	19.0	21.5	23.5
1.39	4.20	6.00	2509	6.29	11.35	1255	4.88	7.49	832	3.72	5.51	10.4	11.9	13.9	15.9	18.4	20.4	22.9	24.9
1.40	5.60	8.00	2495	11.26	14.97	1248	8.58	10.42	827	6.41	7.69	7.6	9.1	11.2	13.2	15.7	17.7	20.2	22.2
1.40	4.60	6.60	2494	7.87	12.52	1247	5.97	8.36	827	4.51	6.15	9.6	11.1	13.1	15.1	17.6	19.6	22.1	24.1
ARC-LENGTH CORRECTION FACTOR —>												**0.75**	**0.77**	**0.80**	**0.82**	**0.85**	**0.87**	**0.89**	**0.90**
1.40	3.60	5.20	2493	3.74	9.42	1246	3.22	6.16	826	2.54	4.54	11.5	13.0	15.0	17.0	19.5	21.5	24.0	26.0
1.41	6.00	8.60	2484	12.40	15.76	1242	9.59	11.21	823	7.15	8.29	---	8.3	10.4	12.4	14.9	16.9	19.4	21.4
1.42	8.60	12.40	2458	---	---	1229	15.51	15.75	815	11.75	11.94	---	---	---	---	---	11.8	14.3	16.3
1.43	3.40	5.00	2455	2.86	8.75	1228	2.67	5.71	814	2.15	4.22	11.8	13.3	15.3	17.3	19.8	21.8	24.3	26.3
1.43	9.40	13.60	2447	---	---	1223	17.11	16.95	811	13.07	12.98	---	---	---	---	---	---	12.7	14.7
1.44	6.40	9.40	2424	13.43	16.45	1212	10.58	11.99	803	7.90	8.90	---	---	9.4	11.4	13.9	15.9	18.4	20.4
1.45	5.40	8.00	2411	10.70	14.59	1206	8.10	10.04	799	6.05	7.41	7.8	9.3	11.3	13.3	15.8	17.8	20.3	22.3
1.46	4.00	6.00	2399	5.54	10.80	1200	4.37	7.08	795	3.35	5.22	10.5	12.0	14.0	16.0	18.5	20.5	23.0	25.0
1.46	7.40	11.00	2391	---	---	1195	12.94	13.80	792	9.69	10.33	---	---	---	9.3	11.8	13.8	16.4	18.4
1.48	3.40	5.20	2367	2.91	8.80	1183	2.70	5.74	784	2.16	4.24	11.6	13.1	15.1	17.1	19.6	21.6	24.1	26.1
1.48	4.20	6.40	2361	6.39	11.44	1180	4.93	7.54	782	3.75	5.55	10.0	11.5	13.5	15.5	18.0	20.0	22.6	24.6
1.50	5.60	8.60	2328	11.37	15.08	1164	8.63	10.47	772	6.44	7.73	---	8.6	10.6	12.7	15.7	17.2	19.7	21.7
1.51	3.60	5.60	2326	3.84	9.52	1163	3.27	6.21	771	2.57	4.58	11.1	12.6	14.6	16.6	19.2	21.2	23.7	25.7
1.53	4.20	6.60	2293	6.42	11.48	1147	4.95	7.55	760	3.77	5.56	9.8	11.4	13.4	15.4	17.9	19.9	22.4	24.4
1.53	6.00	9.40	2281	12.52	15.88	1140	9.65	11.27	756	7.19	8.33	---	---	9.7	11.7	14.2	16.2	18.7	20.7
1.55	4.00	6.40	2257	5.61	10.87	1129	4.41	7.12	748	3.38	5.24	10.2	11.7	13.7	15.7	18.2	20.2	22.7	24.7
1.56	3.60	5.80	2250	3.88	9.56	1125	3.29	6.23	746	2.59	4.59	11.0	12.5	14.5	16.5	19.0	21.0	23.5	25.5
1.56	8.60	13.60	2246	---	---	1123	15.57	15.81	745	11.79	11.98	---	---	---	---	---	---	13.2	15.3
1.56	4.60	7.40	2237	8.02	12.67	1119	6.05	8.43	741	4.55	6.20	8.9	10.4	12.4	14.4	16.9	18.9	21.4	23.4
1.57	4.20	6.80	2229	6.45	11.51	1115	4.96	7.57	739	3.78	5.57	9.7	11.2	13.2	15.2	17.7	19.7	22.2	24.2
1.59	3.40	5.60	2208	2.99	8.88	1104	2.74	5.78	732	2.19	4.27	11.3	12.8	14.8	16.8	19.3	21.3	23.8	25.8
1.59	6.80	11.00	2206	14.38	17.10	1103	11.60	12.79	731	8.66	9.51	---	---	---	9.7	12.2	14.3	16.8	18.8
1.60	4.00	6.60	2193	5.64	10.90	1096	4.42	7.14	727	3.39	5.25	10.0	11.5	13.5	15.5	18.0	20.0	22.5	24.5
1.61	3.60	6.00	2179	3.91	9.59	1090	3.31	6.24	722	2.60	4.60	10.8	12.3	14.3	16.3	18.8	20.8	23.3	25.3
1.61	5.20	8.60	2172	10.18	14.26	1086	7.64	9.70	720	5.71	7.15	7.4	8.9	10.9	13.0	15.5	17.5	20.0	22.0
ARC-LENGTH CORRECTION FACTOR —>												**0.74**	**0.76**	**0.79**	**0.81**	**0.84**	**0.86**	**0.88**	**0.90**

NOTE: Selection program VIA-VISA available at www.ptwizard.com.

DODGE®

B	S-L CLASSIC	BX	CLASSIC COG

STOCK DRIVE SELECTIONS

Ratio	Belt Size/Center Distance																	
	B68 BX68	B75 BX75	B81 BX81	B85 BX85	B90 BX90	B97 BX97	B105 BX105	B112 BX112	B120 BX120	B128 BX128	B144 BX144	B158 BX158	B173 BX173	B180 BX180	B195 BX195	B210 BX210	B240 BX240	B270 BX270
1.22	24.4	27.9	30.9	32.9	35.4	38.9	42.9	46.4	50.4	54.4	62.4	69.4	76.9	80.4	87.9	95.4	109.6	124.6
1.22	26.1	29.6	32.6	34.6	37.1	40.6	44.6	48.1	52.1	56.1	64.1	71.1	78.6	82.1	89.6	97.1	111.4	126.4
1.23	27.8	31.3	34.3	36.3	38.8	42.3	46.3	49.8	53.8	57.8	65.8	72.8	80.3	83.8	91.3	98.8	113.1	128.1
1.23	25.0	28.5	31.5	33.5	36.0	39.5	43.5	47.0	51.0	55.0	63.0	70.0	77.5	81.0	88.5	96.0	110.3	125.3
1.24	23.6	27.1	30.1	32.1	34.6	38.1	42.1	45.6	49.6	53.6	61.6	68.6	76.1	79.6	87.1	94.6	108.8	123.8
1.24	28.1	31.6	34.6	36.6	39.1	42.6	46.6	50.1	54.1	58.1	66.1	73.1	80.6	84.1	91.6	99.1	113.4	128.4
1.24	26.7	30.2	33.2	35.2	37.7	41.2	45.2	48.7	52.7	56.7	64.7	71.7	79.2	82.7	90.2	97.7	112.0	127.0
1.24	25.3	28.8	31.8	33.8	36.3	39.8	43.8	47.3	51.3	55.3	63.3	70.3	77.8	81.3	88.8	96.3	110.6	125.6
1.25	22.8	26.3	29.3	31.3	33.8	37.3	41.3	44.8	48.8	52.8	60.8	67.8	75.3	78.8	86.3	93.8	108.1	123.1
1.25	25.6	29.1	32.1	34.1	36.6	40.1	44.1	47.6	51.6	55.6	63.6	70.6	78.1	81.6	89.1	96.6	110.9	125.9
1.25	28.5	32.0	35.0	37.0	39.5	43.0	47.0	50.5	54.5	58.5	66.5	73.5	81.0	84.5	92.0	99.5	113.7	128.7
1.26	21.7	25.2	28.2	30.2	32.7	36.2	40.2	43.7	47.7	51.7	59.7	66.7	74.2	77.7	85.2	92.7	107.0	122.0
1.26	25.9	29.4	32.4	34.4	36.9	40.4	44.4	47.9	51.9	55.9	63.9	70.9	78.4	81.9	89.4	96.9	111.2	126.2
1.26	27.4	30.9	33.9	35.9	38.4	41.9	45.9	49.4	53.4	57.4	65.4	72.4	79.9	83.4	90.9	98.4	112.6	127.6
1.27	19.5	23.0	26.0	28.0	30.5	34.0	38.0	41.5	45.5	49.5	57.5	64.5	72.0	75.5	83.0	90.5	104.8	119.8
1.28	26.6	30.1	33.1	35.1	37.6	41.1	45.1	48.6	52.6	56.6	64.6	71.6	79.1	82.6	90.1	97.6	111.8	126.8
1.29	25.5	29.0	32.0	34.0	36.5	40.0	44.0	47.5	51.5	55.5	63.5	70.5	78.0	81.5	89.0	96.5	110.7	125.7
1.29	28.0	31.5	34.5	36.5	39.0	42.5	46.5	50.0	54.0	58.0	66.0	73.0	80.5	84.0	91.5	99.0	113.2	128.2
1.30	24.7	28.2	31.2	33.2	35.7	39.2	43.2	46.7	50.7	54.7	62.7	69.7	77.2	80.7	88.2	95.7	109.9	124.9
1.31	27.2	30.7	33.7	35.7	38.2	41.7	45.7	49.2	53.2	57.2	65.2	72.2	79.7	83.2	90.7	98.2	112.5	127.5
1.31	17.7	21.2	24.2	26.2	28.7	32.3	36.3	39.8	43.8	47.8	55.8	62.8	70.3	73.8	81.3	88.8	103.0	118.0
1.31	23.9	27.4	30.4	32.4	34.9	38.4	42.4	45.9	49.9	53.9	61.9	68.9	76.4	79.9	87.4	94.9	109.2	124.2
1.32	28.6	32.1	35.1	37.1	39.6	43.1	47.1	50.6	54.6	58.6	66.6	73.6	81.1	84.6	92.1	99.6	113.9	128.9
1.32	26.4	29.9	32.9	34.9	37.4	40.9	44.9	48.4	52.4	56.4	64.4	71.4	78.9	82.4	89.9	97.4	111.7	126.7
1.33	23.1	26.6	29.6	31.6	34.1	37.6	41.6	45.1	49.1	53.1	61.1	68.1	75.6	79.1	86.6	94.1	108.4	123.4
1.34	25.6	29.1	32.1	34.1	36.6	40.1	44.1	47.6	51.6	55.6	63.6	70.6	78.1	81.6	89.1	96.6	110.9	125.9
1.35	24.8	28.3	31.3	33.3	35.8	39.3	43.3	46.8	50.8	54.8	62.8	69.8	77.3	80.8	88.3	95.8	110.1	125.1
1.35	27.0	30.5	33.5	35.5	38.0	41.5	45.5	49.0	53.0	57.0	65.0	72.0	79.5	83.0	90.5	98.0	112.3	127.3
1.36	26.2	29.8	32.8	34.8	37.3	40.8	44.8	48.3	52.3	56.3	64.3	71.3	78.8	82.3	89.8	97.3	111.5	126.5
1.36	22.1	25.7	28.7	30.7	33.2	36.7	40.7	44.2	48.2	52.2	60.2	67.2	74.7	78.2	85.7	93.2	107.4	122.4
1.37	28.5	32.0	35.0	37.0	39.5	43.0	47.0	50.5	54.5	58.5	66.5	73.5	81.0	84.5	92.0	99.5	113.7	128.7
1.37	25.5	29.0	32.0	34.0	36.5	40.0	44.0	47.5	51.5	55.5	63.5	70.5	78.0	81.5	89.0	96.5	110.7	125.7
1.39	26.9	30.4	33.4	35.4	37.9	41.4	45.4	48.9	52.9	56.9	64.9	71.9	79.4	82.9	90.4	97.9	112.1	127.1
1.40	24.2	27.7	30.7	32.7	35.2	38.7	42.7	46.2	50.2	54.2	62.2	69.2	76.7	80.2	87.7	95.2	109.5	124.5
1.40	26.1	29.6	32.6	34.6	37.1	40.6	44.6	48.1	52.1	56.1	64.1	71.1	78.6	82.1	89.6	97.1	111.4	126.4
	0.92	**0.95**	**0.97**	**0.98**	**0.99**	**1.01**	**1.03**	**1.05**	**1.07**	**1.08**	**1.11**	**1.14**	**1.16**	**1.17**	**1.19**	**1.21**	**1.24**	**1.27**
1.40	28.0	31.5	34.5	36.5	39.0	42.5	46.5	50.0	54.0	58.0	66.0	73.0	80.5	84.0	91.5	99.0	113.2	128.2
1.41	23.4	26.9	29.9	31.9	34.4	37.9	41.9	45.4	49.4	53.4	61.4	68.4	75.9	79.4	86.9	94.4	108.7	123.7
1.42	18.3	21.8	24.8	26.8	29.4	32.9	36.9	40.4	44.4	48.4	56.4	63.4	70.9	74.4	81.9	89.4	103.6	118.6
1.43	28.3	31.8	34.8	36.8	39.3	42.8	46.8	50.3	54.3	58.3	66.3	73.3	80.8	84.3	91.8	99.3	113.6	128.6
1.43	16.7	20.2	23.3	25.3	27.8	31.3	35.3	38.8	42.8	46.8	54.8	61.8	69.3	72.8	80.3	87.8	102.1	117.1
1.44	22.4	26.0	29.0	31.0	33.5	37.0	41.0	44.5	48.5	52.5	60.5	67.5	75.0	78.5	86.0	93.5	107.7	122.7
1.45	24.3	27.9	30.9	32.9	35.4	38.9	42.9	46.4	50.4	54.4	62.4	69.4	76.9	80.4	87.9	95.4	109.6	124.6
1.46	27.0	30.5	33.5	35.5	38.0	41.5	45.5	49.0	53.0	57.0	65.0	72.0	79.5	83.0	90.5	98.0	112.3	127.3
1.46	20.4	23.9	26.9	28.9	31.4	34.9	38.9	42.4	46.4	50.4	58.4	65.4	72.9	76.4	83.9	91.4	105.7	120.7
1.48	28.1	31.6	34.6	36.6	39.1	42.6	46.6	50.1	54.1	58.1	66.1	73.1	80.6	84.1	91.6	99.1	113.4	128.4
1.48	26.6	30.1	33.1	35.1	37.6	41.1	45.1	48.6	52.6	56.6	64.6	71.6	79.1	82.6	90.1	97.6	111.8	126.8
1.50	23.7	27.2	30.2	32.2	34.7	38.2	42.2	45.7	49.7	53.7	61.7	68.7	76.2	79.7	87.2	94.7	109.0	124.0
1.51	27.7	31.2	34.2	36.2	38.7	42.2	46.2	49.7	53.7	57.7	65.7	72.7	80.2	83.7	91.2	98.7	112.9	127.9
1.53	26.4	29.9	32.9	34.9	37.4	40.9	44.9	48.4	52.4	56.4	64.4	71.4	78.9	82.4	89.9	97.4	111.7	126.7
1.53	22.7	26.3	29.3	31.3	33.8	37.3	41.3	44.8	48.8	52.8	60.8	67.8	75.3	78.8	86.3	93.8	108.0	123.0
1.55	26.7	30.2	33.2	35.2	37.7	41.2	45.2	48.7	52.7	56.7	64.7	71.7	79.2	82.7	90.2	97.7	112.0	127.0
1.56	27.5	31.0	34.0	36.0	38.5	42.0	46.0	49.5	53.5	57.5	65.5	72.5	80.0	83.5	91.0	98.5	112.8	127.8
1.56	17.3	20.8	23.8	25.9	28.4	31.9	35.9	39.4	43.4	47.4	55.4	62.4	69.9	73.4	80.9	88.4	102.7	117.7
1.56	25.4	28.9	31.9	34.0	36.5	40.0	44.0	47.5	51.5	55.5	63.5	70.5	78.0	81.5	89.0	96.5	110.7	125.7
1.57	26.2	29.7	32.7	34.7	37.2	40.7	44.7	48.2	52.2	56.2	64.3	71.3	78.8	82.3	89.8	97.3	111.5	126.5
1.59	27.8	31.3	34.3	36.3	38.8	42.3	46.3	49.8	53.8	57.8	65.8	72.8	80.3	83.8	91.3	98.8	113.1	128.1
1.59	20.8	24.3	27.3	29.4	31.9	35.4	39.4	42.9	46.9	50.9	58.9	65.9	73.4	76.9	84.4	91.9	106.2	121.2
1.60	26.5	30.1	33.1	35.1	37.6	41.1	45.1	48.6	52.6	56.6	64.6	71.6	79.1	82.6	90.1	97.6	111.8	126.8
1.61	27.3	30.8	33.8	35.8	38.3	41.8	45.8	49.3	53.4	57.4	65.4	72.4	79.9	83.4	90.9	98.4	112.6	127.6
1.61	24.0	27.5	30.5	32.5	35.0	38.5	42.5	46.0	50.0	54.0	62.0	69.0	76.5	80.0	87.6	95.1	109.3	124.3
	0.92	**0.94**	**0.96**	**0.98**	**0.99**	**1.01**	**1.03**	**1.05**	**1.06**	**1.08**	**1.11**	**1.13**	**1.16**	**1.17**	**1.19**	**1.21**	**1.24**	**1.27**

NOTE: Selection program VIA-VISA available at www.ptwizard.com.

SELECTION

DODGE®

B	S-L CLASSIC

BX	CLASSIC COG

STOCK DRIVE SELECTIONS

Ratio	Stock Shv. Datum Diam.		3500 RPM Driver			3500 RPM Driver			3500 RPM Driver			Belt Size/Center Distance							
			Driven	HP Per Belt		Driven	HP Per Belt		Driven	HP Per Belt		B35	B38	B42	B46	B51	B55	B60	B64
	Driver	Driven	RPM	B	BX	RPM	B	BX	RPM	B	BX	BX35	BX38	BX42	BX46	BX51	BX55	BX60	BX64
1.61	9.40	15.40	2168	---	---	1084	17.18	17.02	718	13.12	13.03	---	---	---	---	---	---	---	13.1
1.64	5.60	9.40	2137	11.46	15.17	1069	8.68	10.51	708	6.47	7.76	---	7.9	9.9	12.0	14.5	16.5	19.0	21.0
1.64	3.40	5.80	2136	3.02	8.91	1068	2.75	5.79	708	2.20	4.28	11.1	12.6	14.6	16.6	19.1	21.1	23.6	25.6
1.64	7.40	12.40	2129	---	---	1064	13.00	13.87	705	9.74	10.37	---	---	---	---	10.6	12.6	15.2	17.2
1.67	5.00	8.60	2094	9.53	13.80	1047	7.14	9.30	694	5.34	6.85	7.5	9.0	11.1	13.1	15.6	17.6	20.1	22.2
1.67	3.80	6.60	2092	4.83	10.30	1046	3.89	6.71	693	3.01	4.94	10.1	11.7	13.7	15.7	18.2	20.2	22.7	24.7
1.68	9.40	16.00	2088	---	---	1044	17.20	17.04	692	13.13	13.04	---	---	---	---	---	---	---	---
1.68	6.40	11.00	2083	13.59	16.62	1041	10.67	12.07	690	7.95	8.95	---	---	---	10.0	12.5	14.6	17.1	19.1
1.69	4.60	8.00	2077	8.09	12.74	1038	6.08	8.46	688	4.58	6.23	8.3	9.9	11.9	13.9	16.4	18.4	20.9	22.9
1.69	3.40	6.00	2069	3.05	8.94	1035	2.76	5.81	686	2.21	4.28	10.9	12.5	14.5	16.5	19.0	21.0	23.5	25.5
1.69	5.40	9.40	2066	10.87	14.76	1033	8.18	10.13	685	6.10	7.46	---	8.0	10.1	12.1	14.6	16.7	19.2	21.2
1.70	4.20	7.40	2057	6.53	11.58	1028	5.00	7.60	682	3.80	5.59	9.2	10.7	12.7	14.7	17.2	19.2	21.7	23.7
1.72	3.80	6.80	2034	4.85	10.32	1017	3.90	6.72	674	3.01	4.95	10.0	11.5	13.5	15.5	18.0	20.0	22.5	24.5
1.74	3.40	6.20	2006	3.07	8.96	1003	2.78	5.82	665	2.22	4.29	10.8	12.3	14.3	16.3	18.8	20.8	23.3	25.3
1.76	5.20	9.40	1994	10.25	14.32	997	7.68	9.73	661	5.73	7.17	---	8.2	10.2	12.3	14.8	16.8	19.3	21.3
1.76	8.60	15.40	1990	---	---	995	15.62	15.86	659	11.82	12.02	---	---	---	---	---	---	---	13.6
1.77	3.80	7.00	1978	4.87	10.34	989	3.91	6.73	656	3.02	4.95	9.8	11.3	13.3	15.3	17.9	19.9	22.4	24.4
1.78	4.00	7.40	1966	5.73	10.99	983	4.47	7.18	652	3.42	5.28	9.3	10.8	12.8	14.9	17.4	19.4	21.9	23.9
1.78	6.80	12.40	1964	14.47	17.19	982	11.64	12.83	651	8.69	9.54	---	---	---	---	11.0	13.0	15.6	17.6
1.79	6.00	11.00	1960	12.65	16.01	980	9.71	11.33	649	7.23	8.38	---	---	---	10.3	12.8	14.8	17.4	19.4
1.80	3.40	6.40	1947	3.09	8.98	973	2.79	5.83	645	2.22	4.30	10.6	12.1	14.1	16.1	18.6	20.7	23.2	25.2
1.80	7.40	13.60	1946	---	---	973	13.03	13.90	645	9.76	10.39	---	---	---	---	---	11.5	14.1	16.1
1.81	4.60	8.60	1937	8.13	12.79	969	6.10	8.49	642	4.59	6.24	7.8	9.3	11.4	13.4	15.9	17.9	20.4	22.4
1.83	8.60	16.00	1917	---	---	958	15.63	15.87	635	11.83	12.03	---	---	---	---	---	---	---	13.1
1.83	4.20	8.00	1909	6.57	11.63	955	5.02	7.63	633	3.82	5.61	8.6	10.1	12.2	14.2	16.7	18.7	21.2	23.2
ARC-LENGTH CORRECTION FACTOR —>												**0.74**	**0.76**	**0.79**	**0.81**	**0.84**	**0.86**	**0.88**	**0.90**
1.85	3.40	6.60	1891	3.11	9.00	945	2.79	5.84	627	2.23	4.30	10.4	11.9	14.0	16.0	18.5	20.5	23.0	25.0
1.87	3.80	7.40	1876	4.90	10.37	938	3.92	6.75	622	3.03	4.96	9.4	11.0	13.0	15.0	17.5	19.5	22.0	24.0
1.89	6.40	12.40	1854	13.67	16.69	927	10.70	12.11	615	7.98	8.98	---	---	---	---	11.2	13.3	15.9	17.9
1.90	3.40	6.80	1838	3.12	9.01	919	2.80	5.84	609	2.23	4.31	10.3	11.8	13.8	15.8	18.3	20.3	22.8	24.8
1.91	5.60	11.00	1836	11.56	15.26	918	8.72	10.56	609	6.50	7.79	---	---	8.4	10.5	13.1	15.1	17.7	19.7
1.92	4.00	8.00	1825	5.77	11.03	913	4.48	7.20	605	3.43	5.29	8.8	10.3	12.3	14.3	16.9	18.9	21.4	23.4
1.92	9.40	18.40	1821	---	---	910	17.24	17.08	603	13.16	13.07	---	---	---	---	---	---	---	---
1.95	6.80	13.60	1795	14.52	17.23	898	11.67	12.85	595	8.71	9.56	---	---	---	---	---	11.9	14.5	16.5
1.96	3.40	7.00	1788	3.13	9.02	894	2.81	5.85	593	2.24	4.31	10.1	11.6	13.6	15.6	18.1	20.2	22.7	24.7
1.96	4.20	8.60	1781	6.61	11.66	891	5.04	7.64	590	3.83	5.62	8.1	9.6	11.6	13.7	16.2	18.2	20.7	22.7
1.97	4.60	9.40	1779	8.18	12.83	889	6.12	8.51	590	4.61	6.25	---	8.6	10.6	12.7	15.2	17.2	19.8	21.8
1.97	5.40	11.00	1775	10.96	14.85	887	8.22	10.17	588	6.13	7.49	---	---	8.6	10.7	13.2	15.3	17.8	19.8
2.01	6.00	12.40	1745	12.71	16.06	872	9.74	11.36	578	7.25	8.40	---	---	---	---	11.5	13.6	16.1	18.2
2.01	3.80	8.00	1742	4.93	10.40	871	3.94	6.76	577	3.04	4.97	8.9	10.4	12.5	14.5	17.0	19.0	21.5	23.5
2.03	7.40	15.40	1723	---	---	862	13.06	13.93	571	9.78	10.41	---	---	---	---	---	---	12.4	14.4
2.04	5.20	11.00	1713	10.32	14.40	857	7.71	9.77	568	5.76	7.19	---	---	8.7	10.8	13.4	15.4	17.9	20.0
2.06	4.00	8.60	1703	5.79	11.06	852	4.50	7.21	564	3.44	5.30	8.2	9.7	11.8	13.8	16.3	18.4	20.9	22.9
2.07	6.40	13.60	1695	13.70	16.73	847	10.72	12.13	562	7.99	8.99	---	---	---	---	10.1	12.2	14.8	16.8
2.09	8.60	18.40	1672	---	---	836	15.66	15.90	554	11.85	12.04	---	---	---	---	---	---	---	---
2.11	7.40	16.00	1660	---	---	830	13.07	13.93	550	9.78	10.42	---	---	---	---	---	---	11.7	13.9
ARC-LENGTH CORRECTION FACTOR —>												**0.72**	**0.75**	**0.77**	**0.80**	**0.83**	**0.85**	**0.88**	**0.89**
2.11	3.60	8.00	1658	4.07	9.75	829	3.39	6.32	549	2.65	4.65	9.0	10.6	12.6	14.6	17.2	19.2	21.7	23.7
2.12	5.00	11.00	1651	9.65	13.92	826	7.20	9.36	547	5.38	6.89	---	---	8.8	10.9	13.5	15.6	18.1	20.1
2.14	4.20	9.40	1635	6.64	11.69	818	5.05	7.66	542	3.84	5.63	7.3	8.8	10.9	13.0	15.5	17.5	20.1	22.1
2.14	5.60	12.40	1635	11.60	15.31	817	8.75	10.58	542	6.52	7.81	---	---	---	9.1	11.8	13.9	16.4	18.5
2.19	6.00	13.60	1595	12.73	16.09	797	9.75	11.37	528	7.26	8.41	---	---	---	---	10.3	12.4	15.0	17.1
2.20	6.80	15.40	1590	14.56	17.28	795	11.69	12.87	527	8.72	9.57	---	---	---	---	---	---	12.7	14.9
2.22	5.40	12.40	1580	10.99	14.88	790	8.24	10.19	524	6.14	7.51	---	---	---	9.3	11.9	14.0	16.6	18.6
2.22	3.40	8.00	1574	3.17	9.06	787	2.83	5.87	522	2.25	4.33	9.2	10.7	12.7	14.8	17.3	19.3	21.8	23.8
2.24	4.00	9.40	1564	5.82	11.08	782	4.51	7.23	518	3.45	5.31	7.4	9.0	11.1	13.1	15.6	17.7	20.2	22.2
2.27	8.60	20.00	1540	---	---	770	15.67	15.92	510	11.85	12.05	---	---	---	---	---	---	---	---
2.28	6.80	16.00	1532	14.57	17.28	766	11.69	12.88	508	8.72	9.57	---	---	---	---	---	---	12.1	14.3
2.29	4.60	11.00	1528	8.22	12.88	764	6.15	8.53	506	4.62	6.27	---	---	9.1	11.2	13.8	15.8	18.4	20.4
2.29	5.20	12.40	1525	10.35	14.43	763	7.73	9.79	505	5.77	7.20	---	---	---	9.4	12.0	14.1	16.7	18.7
2.33	6.40	15.40	1501	13.74	16.76	751	10.74	12.14	498	8.00	9.00	---	---	---	---	---	---	13.0	15.1
2.34	5.60	13.60	1494	11.62	15.33	747	8.76	10.60	495	6.52	7.81	---	---	---	---	10.6	12.7	15.3	17.4
ARC-LENGTH CORRECTION FACTOR —>												**0.71**	**0.73**	**0.75**	**0.76**	**0.80**	**0.82**	**0.85**	**0.87**

NOTE: Selection program VIA-VISA available at www.ptwizard.com.

DODGE®

B	S-L CLASSIC	BX	CLASSIC COG

STOCK DRIVE SELECTIONS

Ratio	Belt Size/Center Distance																	
	B68 BX68	B75 BX75	B81 BX81	B85 BX85	B90 BX90	B97 BX97	B105 BX105	B112 BX112	B120 BX120	B128 BX128	B144 BX144	B158 BX158	B173 BX173	B180 BX180	B195 BX195	B210 BX210	B240 BX240	B270 BX270
1.61	15.1	18.7	21.7	23.7	26.3	29.8	33.8	37.3	41.3	45.3	53.3	60.4	67.9	71.4	78.9	86.4	100.6	115.6
1.64	23.0	26.6	29.6	31.6	34.1	37.6	41.6	45.1	49.1	53.1	61.1	68.1	75.6	79.1	86.6	94.1	108.4	123.4
1.64	27.7	31.2	34.2	36.2	38.7	42.2	46.2	49.7	53.7	57.7	65.7	72.7	80.2	83.7	91.2	98.7	112.9	127.9
1.64	19.2	22.7	25.7	27.7	30.3	33.8	37.8	41.3	45.3	49.3	57.3	64.3	71.8	75.3	82.8	90.3	104.6	119.6
1.67	24.2	27.7	30.7	32.7	35.2	38.7	42.7	46.2	50.2	54.2	62.2	69.2	76.7	80.2	87.7	95.2	109.5	124.5
1.67	26.7	30.2	33.2	35.2	37.7	41.2	45.2	48.7	52.7	56.7	64.7	71.7	79.2	82.7	90.2	97.7	112.0	127.0
1.68	14.6	18.2	21.2	23.2	25.7	29.3	33.3	36.8	40.8	44.8	52.9	59.9	67.4	70.9	78.4	85.9	100.2	115.2
1.68	21.1	24.6	27.6	29.7	32.2	35.7	39.7	43.2	47.2	51.2	59.2	66.2	73.7	77.2	84.7	92.2	106.5	121.5
1.69	25.0	28.5	31.5	33.5	36.0	39.5	43.5	47.0	51.0	55.0	63.0	70.0	77.5	81.0	88.5	96.0	110.2	125.2
1.69	27.5	31.0	34.0	36.0	38.5	42.0	46.0	49.5	53.5	57.5	65.5	72.5	80.0	83.5	91.0	98.5	112.8	127.8
1.69	23.2	26.7	29.7	31.7	34.2	37.7	41.7	45.2	49.2	53.2	61.2	68.3	75.8	79.3	86.8	94.3	108.5	123.5
1.70	25.7	29.3	32.3	34.3	36.8	40.3	44.3	47.8	51.8	55.8	63.8	70.8	78.3	81.8	89.3	96.8	111.0	126.0
1.72	26.5	30.0	33.0	35.0	37.5	41.1	45.1	48.6	52.6	56.6	64.6	71.6	79.1	82.6	90.1	97.6	111.8	126.8
1.74	27.3	30.8	33.8	35.8	38.3	41.8	45.8	49.3	53.3	57.3	65.3	72.4	79.9	83.4	90.9	98.4	112.6	127.6
1.76	23.3	26.9	29.9	31.9	34.4	37.9	41.9	45.4	49.4	53.4	61.4	68.4	75.9	79.4	86.9	94.4	108.7	123.7
1.76	15.7	19.3	22.3	24.3	26.8	30.4	34.4	37.9	41.9	45.9	54.0	61.0	68.5	72.0	79.5	87.0	101.3	116.3
1.77	26.4	29.9	32.9	34.9	37.4	40.9	44.9	48.4	52.4	56.4	64.4	71.4	78.9	82.4	89.9	97.4	111.7	126.7
1.78	25.9	29.4	32.4	34.4	36.9	40.4	44.4	47.9	51.9	55.9	63.9	70.9	78.4	81.9	89.4	96.9	111.2	126.2
1.78	19.6	23.2	26.2	28.2	30.7	34.2	38.2	41.7	45.7	49.7	57.8	64.8	72.3	75.8	83.3	90.8	105.0	120.0
1.79	21.4	24.9	27.9	30.0	32.5	36.0	40.0	43.5	47.5	51.5	59.5	66.5	74.0	77.5	85.0	92.5	106.8	121.8
1.80	27.2	30.7	33.7	35.7	38.2	41.7	45.7	49.2	53.2	57.2	65.2	72.2	79.7	83.2	90.7	98.2	112.4	127.4
1.80	18.2	21.7	24.7	26.7	29.3	32.8	36.8	40.3	44.3	48.3	56.3	63.3	70.8	74.4	81.9	89.4	103.6	118.6
1.81	24.5	28.0	31.0	33.0	35.5	39.0	43.0	46.5	50.5	54.5	62.5	69.5	77.0	80.5	88.0	95.5	109.8	124.8
1.83	15.1	18.7	21.8	23.8	26.3	29.9	33.9	37.4	41.4	45.4	53.5	60.5	68.0	71.5	79.0	86.5	100.8	115.8
1.83	25.3	28.8	31.8	33.8	36.3	39.8	43.8	47.3	51.3	55.3	63.3	70.3	77.8	81.3	88.8	96.3	110.6	125.6
	0.92	**0.94**	**0.96**	**0.98**	**0.99**	**1.01**	**1.03**	**1.05**	**1.06**	**1.08**	**1.11**	**1.13**	**1.16**	**1.17**	**1.19**	**1.21**	**1.24**	**1.27**
1.85	27.0	30.5	33.5	35.5	38.0	41.5	45.5	49.0	53.0	57.0	65.0	72.0	79.5	83.0	90.5	98.0	112.3	127.3
1.87	26.0	29.6	32.6	34.6	37.1	40.6	44.6	48.1	52.1	56.1	64.1	71.1	78.6	82.1	89.6	97.1	111.3	126.3
1.89	19.9	23.5	26.5	28.5	31.0	34.5	38.5	42.0	46.0	50.1	58.1	65.1	72.6	76.1	83.6	91.1	105.3	120.4
1.90	26.8	30.3	33.3	35.4	37.9	41.4	45.4	48.9	52.9	56.9	64.9	71.9	79.4	82.9	90.4	97.9	112.1	127.1
1.91	21.7	25.2	28.2	30.2	32.8	36.3	40.3	43.8	47.8	51.8	59.8	66.8	74.3	77.8	85.3	92.8	107.1	122.1
1.92	25.4	28.9	31.9	33.9	36.4	39.9	43.9	47.4	51.4	55.4	63.4	70.5	78.0	81.5	89.0	96.5	110.7	125.7
1.92	---	15.9	19.0	21.1	23.6	27.2	31.3	34.8	38.8	42.8	50.9	57.9	65.4	68.9	76.4	84.0	98.2	113.2
1.95	18.6	22.1	25.2	27.2	29.7	33.2	37.2	40.7	44.8	48.8	56.8	63.8	71.3	74.8	82.3	89.8	104.1	119.1
1.96	26.7	30.2	33.2	35.2	37.7	41.2	45.2	48.7	52.7	56.7	64.7	71.7	79.2	82.7	90.2	97.7	112.0	127.0
1.96	24.8	28.3	31.3	33.3	35.8	39.3	43.3	46.8	50.8	54.8	62.8	69.8	77.3	80.8	88.3	95.8	110.1	125.1
1.97	23.8	27.3	30.3	32.3	34.8	38.3	42.3	45.8	49.9	53.9	61.9	68.9	76.4	79.9	87.4	94.9	109.1	124.1
1.97	21.8	25.4	28.4	30.4	32.9	36.4	40.4	43.9	47.9	52.0	60.0	67.0	74.5	78.0	85.5	93.0	107.2	122.2
2.01	20.2	23.7	26.8	28.8	31.3	34.8	38.8	42.3	46.3	50.4	58.4	65.4	72.9	76.4	83.9	91.4	105.7	120.7
2.01	25.6	29.1	32.1	34.1	36.6	40.1	44.1	47.6	51.6	55.6	63.6	70.6	78.1	81.6	89.1	96.6	110.9	125.9
2.03	16.5	20.1	23.2	25.2	27.7	31.2	35.3	38.8	42.8	46.8	54.9	61.9	69.4	72.9	80.4	87.9	102.2	117.2
2.04	22.0	25.5	28.5	30.5	33.1	36.6	40.6	44.1	48.1	52.1	60.1	67.1	74.6	78.1	85.6	93.1	107.4	122.4
2.06	24.9	28.4	31.4	33.4	35.9	39.4	43.4	47.0	51.0	55.0	63.0	70.0	77.5	81.0	88.5	96.0	110.2	125.2
2.07	18.9	22.4	25.4	27.5	30.0	33.5	37.5	41.0	45.1	49.1	57.1	64.1	71.6	75.1	82.6	90.1	104.4	119.4
2.09	---	16.5	19.6	21.7	24.2	27.8	31.8	35.4	39.4	43.4	51.5	58.5	66.0	69.5	77.0	84.6	98.8	113.8
2.11	16.0	19.6	22.6	24.7	27.2	30.7	34.8	38.3	42.3	46.3	54.4	61.4	68.9	72.4	79.9	87.4	101.7	116.7
	0.91	**0.94**	**0.96**	**0.97**	**0.98**	**1.00**	**1.02**	**1.04**	**1.06**	**1.08**	**1.11**	**1.13**	**1.15**	**1.17**	**1.19**	**1.21**	**1.24**	**1.27**
2.11	25.7	29.2	32.2	34.2	36.7	40.2	44.2	47.7	51.7	55.8	63.8	70.8	78.3	81.8	89.3	96.8	111.0	126.0
2.12	22.1	25.7	28.7	30.7	33.2	36.7	40.7	44.2	48.2	52.3	60.3	67.3	74.8	78.3	85.8	93.3	107.5	122.6
2.14	24.1	27.6	30.6	32.6	35.1	38.6	42.6	46.2	50.2	54.2	62.2	69.2	76.7	80.2	87.7	95.2	109.4	124.4
2.14	20.5	24.0	27.1	29.1	31.6	35.1	39.1	42.6	46.6	50.7	58.7	65.7	73.2	76.7	84.2	91.7	106.0	121.0
2.19	19.1	22.7	25.7	27.8	30.3	33.8	37.8	41.3	45.4	49.4	57.4	64.4	71.9	75.4	82.9	90.4	104.7	119.7
2.20	16.9	20.5	23.6	25.6	28.1	31.7	35.7	39.2	43.3	47.3	55.3	62.3	69.8	73.3	80.9	88.4	102.6	117.6
2.22	20.6	24.2	27.2	29.2	31.7	35.3	39.3	42.8	46.8	50.8	58.8	65.8	73.3	76.8	84.4	91.9	106.1	121.1
2.22	25.8	29.4	32.4	34.4	36.9	40.4	44.4	47.9	51.9	55.9	63.9	70.9	78.4	81.9	89.4	96.9	111.2	126.2
2.24	24.2	27.7	30.8	32.8	35.3	38.8	42.8	46.3	50.3	54.3	62.3	69.3	76.8	80.3	87.8	95.3	109.6	124.6
2.27	---	14.9	18.0	20.1	22.7	26.3	30.4	34.0	38.0	42.1	50.1	57.2	64.7	68.2	75.7	83.3	97.5	112.6
2.28	16.4	20.0	23.0	25.1	27.6	31.2	35.2	38.7	42.8	46.8	54.8	61.8	69.3	72.9	80.4	87.9	102.1	117.2
2.29	22.4	26.0	29.0	31.0	33.5	37.0	41.0	44.5	48.5	52.6	60.6	67.6	75.1	78.6	86.1	93.6	107.9	122.9
2.29	20.8	24.3	27.3	29.4	31.9	35.4	39.4	42.9	46.9	51.0	59.0	66.0	73.5	77.0	84.5	92.0	106.3	121.3
2.33	17.2	20.8	23.9	25.9	28.4	32.0	36.0	39.5	43.6	47.6	55.6	62.6	70.1	73.6	81.2	88.7	102.9	118.0
2.34	19.4	23.0	26.0	28.0	30.6	34.1	38.1	41.6	45.7	49.7	57.7	64.7	72.2	75.7	83.2	90.7	105.0	120.0
	0.89	**0.92**	**0.94**	**0.96**	**0.97**	**.99**	**1.01**	**1.03**	**1.05**	**1.07**	**1.10**	**1.12**	**1.15**	**1.16**	**1.18**	**1.20**	**1.23**	**1.26**

NOTE: Selection program VIA-VISA available at www.ptwizard.com.

SELECTION

DODGE®

B	S-L CLASSIC	BX	CLASSIC COG

STOCK DRIVE SELECTIONS

Ratio	Stock Shv. Datum Diam.		3500 RPM Driver			1750 RPM Driver			1160 RPM Driver			Belt Size/Center Distance							
			Driven	HP Per Belt		Driven	HP Per Belt		Driven	HP Per Belt		B35	B38	B42	B46	B51	B55	B60	B64
	Driver	Driven	RPM	B	BX	RPM	B	BX	RPM	B	BX	BX35	BX38	BX42	BX46	BX51	BX55	BX60	BX64
2.35	3.80	9.40	1492	4.98	10.44	746	3.96	6.79	494	3.06	4.99	7.5	9.1	11.2	13.2	15.8	17.8	20.3	22.4
2.38	5.00	12.40	1470	9.68	13.95	735	7.21	9.38	487	5.39	6.90	---	---	---	9.5	12.2	14.3	16.8	18.9
2.38	3.40	8.60	1469	3.19	9.08	734	2.84	5.88	487	2.26	4.33	8.6	10.1	12.2	14.2	16.8	18.8	21.3	23.3
2.42	7.40	18.40	1448	---	---	724	13.08	13.95	480	9.79	10.43	---	---	---	---	---	---	---	---
2.42	5.40	13.60	1444	11.01	14.90	722	8.25	10.20	479	6.15	7.51	---	---	---	---	10.7	12.8	15.4	17.5
2.46	3.60	9.40	1420	4.10	9.78	710	3.41	6.34	471	2.66	4.66	7.6	9.2	11.3	13.4	15.9	18.0	20.5	22.5
2.48	6.00	15.40	1412	12.76	16.12	706	9.77	11.39	468	7.27	8.41	---	---	---	---	---	---	13.3	15.4
2.49	4.20	11.00	1405	6.67	11.73	702	5.07	7.68	466	3.85	5.64	---	---	9.3	11.5	14.1	16.1	18.7	20.7
2.51	5.20	13.60	1394	10.37	14.45	697	7.74	9.79	462	5.78	7.21	---	---	---	---	10.8	13.0	15.6	17.6
2.57	6.00	16.00	1361	12.77	16.13	680	9.77	11.39	451	7.27	8.42	---	---	---	---	---	---	12.6	14.8
2.57	4.60	12.40	1361	8.25	12.90	680	6.16	8.54	451	4.63	6.28	---	---	---	9.8	12.4	14.5	17.1	19.2
2.60	3.40	9.40	1348	3.21	9.10	674	2.84	5.88	447	2.26	4.34	7.8	9.4	11.5	13.5	16.1	18.1	20.6	22.7
2.60	9.40	25.00	1347	---	---	674	17.28	17.12	446	13.19	13.10	---	---	---	---	---	---	---	---
2.61	4.00	11.00	1343	5.85	11.11	672	4.53	7.24	445	3.46	5.32	---	---	9.5	11.6	14.2	16.2	18.8	20.8
2.62	6.80	18.40	1336	14.59	17.31	668	11.70	12.89	443	8.73	9.58	---	---	---	---	---	---	---	---
2.62	7.40	20.00	1334	---	---	667	13.09	13.96	442	9.80	10.43	---	---	---	---	---	---	---	---
2.64	5.60	15.40	1324	11.64	15.35	662	8.77	10.61	439	6.53	7.82	---	---	---	---	---	10.8	13.5	15.6
2.73	3.80	11.00	1282	5.00	10.47	641	3.97	6.80	425	3.06	5.00	---	7.4	9.6	11.7	14.3	16.4	18.9	21.0
2.74	5.40	15.40	1279	11.03	14.92	640	8.26	10.21	424	6.16	7.52	---	---	---	---	---	10.9	13.7	15.8
2.78	6.40	18.40	1261	13.76	16.79	631	10.75	12.16	418	8.01	9.01	---	---	---	---	---	---	---	---
ARC-LENGTH CORRECTION FACTOR —>												**0.71**	**0.73**	**0.75**	**0.76**	**0.80**	**0.82**	**0.85**	**0.87**
2.80	4.20	12.40	1251	6.69	11.74	625	5.08	7.69	415	3.85	5.65	---	---	---	10.0	12.7	14.8	17.4	19.4
2.81	4.60	13.60	1244	8.26	12.91	622	6.16	8.55	412	4.63	6.28	---	---	---	---	11.2	13.4	16.0	18.1
2.83	5.20	15.40	1235	10.39	14.46	617	7.75	9.80	409	5.78	7.21	---	---	---	---	---	11.1	13.8	15.9
2.84	5.40	16.00	1232	11.04	14.93	616	8.26	10.21	408	6.16	7.52	---	---	---	---	---	---	13.0	15.2
2.84	6.80	20.00	1231	14.60	17.32	615	11.71	12.90	408	8.73	9.59	---	---	---	---	---	---	---	---
2.87	3.60	11.00	1220	4.13	9.80	610	3.42	6.35	404	2.67	4.67	---	7.5	9.7	11.9	14.5	16.5	19.1	21.1
2.93	4.00	12.40	1196	5.86	11.12	598	4.53	7.25	396	3.46	5.33	---	---	---	10.2	12.8	14.9	17.5	19.6
2.94	5.00	15.40	1190	9.71	13.98	595	7.23	9.39	395	5.40	6.91	---	---	---	---	---	11.2	13.9	16.0
2.95	6.00	18.40	1187	12.78	16.14	593	9.78	11.40	393	7.28	8.42	---	---	---	---	---	---	---	---
3.01	6.40	20.00	1162	13.77	16.80	581	10.76	12.16	385	8.01	9.01	---	---	---	---	---	---	---	---
3.02	3.40	11.00	1158	3.22	9.11	579	2.85	5.89	384	2.27	4.34	---	7.7	9.9	12.0	14.6	16.7	19.2	21.3
3.05	5.00	16.00	1147	9.72	13.98	573	7.23	9.39	380	5.40	6.91	---	---	---	---	---	---	13.3	15.4
3.06	4.20	13.60	1143	6.70	11.75	572	5.09	7.69	379	3.86	5.65	---	---	---	---	11.5	13.6	16.2	18.3
3.07	3.80	12.40	1141	5.01	10.48	571	3.98	6.80	378	3.07	5.00	---	---	---	10.3	13.0	15.1	17.7	19.7
3.11	9.40	30.00	1125	---	---	563	17.29	17.13	373	13.19	13.11	---	---	---	---	---	---	---	---
3.15	5.60	18.40	1112	11.66	15.37	556	8.78	10.62	369	6.54	7.83	---	---	---	---			---	12.4
3.18	4.60	15.40	1102	8.27	12.92	551	6.17	8.56	365	4.64	6.29	---	---	---	---	---	11.4	14.2	16.3
3.20	6.00	20.00	1093	12.79	16.15	547	9.78	11.40	362	7.28	8.42	---	---	---	---	---	---	---	---
3.20	4.00	13.60	1093	5.87	11.13	547	4.54	7.25	362	3.47	5.33	---	---	---	---	11.6	13.7	16.4	18.5
3.22	3.60	12.40	1086	4.14	9.82	543	3.42	6.35	360	2.67	4.67	---	---	8.2	10.4	13.1	15.2	17.8	19.9
3.26	5.40	18.40	1075	11.05	14.94	537	8.27	10.22	356	6.16	7.52	---	---	---	---	---	---	---	12.5
3.27	7.40	25.00	1071	---	---	535	13.10	13.97	355	9.80	10.44	---	---	---	---	---	---	---	---
3.30	4.60	16.00	1061	8.27	12.93	531	6.17	8.56	352	4.64	6.29	---	---	---	---	---	10.7	13.5	15.7
3.36	3.80	13.60	1043	5.02	10.49	521	3.98	6.81	346	3.07	5.00	---	---	---	8.9	11.7	13.9	16.5	18.6
3.37	5.20	18.40	1037	10.41	14.48	519	7.75	9.81	344	5.79	7.22	---	---	---	---	---	---	---	12.7
ARC-LENGTH CORRECTION FACTOR —>												**---**	**0.70**	**0.72**	**0.74**	**0.77**	**0.80**	**0.83**	**0.86**
3.39	3.40	12.40	1031	3.23	9.12	516	2.86	5.90	342	2.27	4.34	---	---	8.3	10.5	13.2	15.3	17.9	20.0
3.42	5.60	20.00	1025	11.67	15.38	512	8.78	10.62	340	6.54	7.83	---	---	---	---	---	---	---	---
3.46	4.20	15.40	1013	6.71	11.76	506	5.09	7.70	336	3.86	5.65	---	---	---	---	---	11.7	14.4	16.6
3.50	5.00	18.40	1000	9.73	13.99	500	7.23	9.40	331	5.41	6.91	---	---	---	---	---	---	---	12.8
3.53	3.60	13.60	993	4.14	9.82	496	3.42	6.36	329	2.67	4.68	---	---	---	9.0	11.8	14.0	16.6	18.7
3.53	5.40	20.00	990	11.06	14.95	495	8.27	10.22	328	6.17	7.53	---	---	---	---	---	---	---	---
3.54	6.80	25.00	988	14.62	17.34	494	11.72	12.91	328	8.74	9.59	---	---	---	---	---	---	---	---
3.61	4.00	15.40	968	5.88	11.14	484	4.54	7.26	321	3.47	5.33	---	---	---	---	---	11.8	14.6	16.7
3.66	5.20	20.00	956	10.41	14.49	478	7.76	9.81	317	5.79	7.22	---	---	---	---	---	---	---	---
3.71	3.40	13.60	943	3.24	9.13	471	2.86	5.90	312	2.27	4.35	---	---	---	9.1	12.0	14.1	16.8	18.9
3.75	6.40	25.00	933	13.79	16.82	466	10.77	12.17	309	8.02	9.02	---	---	---	---	---	---	---	---
3.75	4.00	16.00	933	5.88	11.14	466	4.54	7.26	309	3.47	5.33	---	---	---	---	---	11.1	13.9	16.1
3.78	4.60	18.40	925	8.28	12.93	463	6.18	8.56	307	4.64	6.29	---	---	---	---	---	---	---	13.0
3.79	3.80	15.40	924	5.03	10.50	462	3.99	6.81	306	3.07	5.01	---	---	---	---	---	11.9	14.7	16.8
3.80	5.00	20.00	921	9.73	14.00	461	7.24	9.40	305	5.41	6.91	---	---	---	---	---	---	---	---
ARC-LENGTH CORRECTION FACTOR —>												**---**	**---**	**0.70**	**0.72**	**0.75**	**0.78**	**0.81**	**0.83**

NOTE: Selection program VIA-VISA available at www.ptwizard.com.

DODGE®

B	S-L CLASSIC	BX	CLASSIC COG

STOCK DRIVE SELECTIONS

Ratio	Belt Size/Center Distance																	
	B68 BX68	B75 BX75	B81 BX81	B85 BX85	B90 BX90	B97 BX97	B105 BX105	B112 BX112	B120 BX120	B128 BX128	B144 BX144	B158 BX158	B173 BX173	B180 BX180	B195 BX195	B210 BX210	B240 BX240	B270 BX270
2.35	24.4	27.9	30.9	32.9	35.4	38.9	42.9	46.5	50.5	54.5	62.5	69.5	77.0	80.5	88.0	95.5	109.8	124.8
2.38	20.9	24.5	27.5	29.5	32.0	35.5	39.6	43.1	47.1	51.1	59.1	66.1	73.6	77.2	84.7	92.2	106.4	121.4
2.38	25.3	28.9	31.9	33.9	36.4	39.9	43.9	47.4	51.4	55.4	63.4	70.4	77.9	81.4	88.9	96.4	110.7	125.7
2.42	13.5	17.3	20.4	22.5	25.0	28.6	32.7	36.2	40.3	44.3	52.4	59.4	66.9	70.4	78.0	85.5	99.7	114.8
2.42	19.6	23.1	26.2	28.2	30.7	34.2	38.3	41.8	45.8	49.8	57.8	64.9	72.4	75.9	83.4	90.9	105.2	120.2
2.46	24.5	28.0	31.1	33.1	35.6	39.1	43.1	46.6	50.6	54.6	62.6	69.6	77.1	80.6	88.1	95.7	109.9	124.9
2.48	17.5	21.1	24.1	26.2	28.7	32.3	36.3	39.8	43.8	47.9	55.9	62.9	70.4	74.0	81.5	89.0	103.2	118.3
2.49	22.7	26.2	29.3	31.3	33.8	37.3	41.3	44.8	48.8	52.9	60.9	67.9	75.4	78.9	86.4	93.9	108.2	123.2
2.51	19.7	23.3	26.3	28.3	30.9	34.4	38.4	41.9	46.0	50.0	58.0	65.0	72.5	76.0	83.5	91.0	105.3	120.3
2.57	16.9	20.5	23.6	25.6	28.2	31.7	35.8	39.3	43.3	47.4	55.4	62.4	70.0	73.5	81.0	88.5	102.8	117.8
2.57	21.2	24.7	27.8	29.8	32.3	35.8	39.9	43.4	47.4	51.4	59.4	66.4	74.0	77.5	85.0	92.5	106.7	121.7
2.60	24.7	28.2	31.2	33.2	35.7	39.2	43.2	46.8	50.8	54.8	62.8	69.8	77.3	80.8	88.3	95.8	110.1	125.1
2.60	---	---	---	---	---	20.9	25.2	28.8	33.0	37.1	45.2	52.3	59.9	63.4	71.0	78.5	92.8	107.9
2.61	22.9	26.4	29.4	31.4	33.9	37.5	41.5	45.0	49.0	53.0	61.0	68.0	75.5	79.0	86.6	94.1	108.3	123.3
2.62	13.9	17.7	20.8	22.9	25.5	29.0	33.1	36.7	40.7	44.7	52.8	59.8	67.4	70.9	78.4	85.9	100.2	115.2
2.62	---	15.6	18.8	20.9	23.5	27.2	31.3	34.8	38.9	42.9	51.0	58.0	65.6	69.1	76.6	84.2	98.4	113.5
2.64	17.7	21.4	24.4	26.5	29.0	32.5	36.6	40.1	44.1	48.2	56.2	63.2	70.7	74.3	81.8	89.3	103.5	118.6
2.73	23.0	26.5	29.6	31.6	34.1	37.6	41.6	45.1	49.2	53.2	61.2	68.2	75.7	79.2	86.7	94.2	108.5	123.5
2.74	17.9	21.5	24.6	26.6	29.1	32.7	36.7	40.3	44.3	48.3	56.4	63.4	70.9	74.4	81.9	89.4	103.7	118.7
2.78	14.2	17.9	21.1	23.2	25.7	29.3	33.4	36.9	41.0	45.0	53.1	60.1	67.7	71.2	78.7	86.2	100.5	115.5
	0.89	**0.92**	**0.94**	**0.96**	**0.97**	**0.99**	**1.01**	**1.03**	**1.05**	**1.07**	**1.10**	**1.12**	**1.15**	**1.16**	**1.18**	**1.20**	**1.23**	**1.26**
2.80	21.5	25.0	28.1	30.1	32.6	36.1	40.2	43.7	47.7	51.7	59.7	66.1	74.3	77.8	85.3	92.8	107.0	122.1
2.81	20.1	23.7	26.7	28.8	31.3	34.8	38.9	42.4	46.4	50.4	58.4	65.5	73.0	76.5	84.0	91.5	105.8	120.8
2.83	18.0	21.6	24.7	26.7	29.3	32.8	36.9	40.4	44.4	48.5	56.5	63.5	71.0	74.6	82.1	89.6	103.9	118.9
2.84	17.3	20.9	24.0	26.1	28.6	32.2	36.2	39.7	43.8	47.8	55.8	62.9	70.4	73.9	81.4	88.9	103.2	118.2
2.84	---	16.0	19.2	21.3	24.0	27.6	31.7	35.2	39.3	43.4	51.4	58.5	66.0	69.5	77.1	84.6	98.9	113.9
2.87	23.1	26.7	29.7	31.7	34.2	37.8	41.8	45.3	49.3	53.3	61.3	68.3	75.8	79.4	86.9	94.4	108.6	123.6
2.93	21.6	25.2	28.2	30.2	32.8	36.3	40.3	43.8	47.8	51.9	59.9	66.9	74.4	77.9	85.4	92.9	107.2	122.2
2.94	18.1	21.8	24.8	26.9	29.4	33.0	37.0	40.6	44.6	48.6	56.6	63.7	71.2	74.7	82.2	89.7	104.0	119.0
2.95	14.4	18.2	21.3	23.4	26.0	29.6	33.7	37.2	41.3	45.3	53.4	60.4	68.0	71.5	79.0	86.5	100.8	115.8
3.01	---	16.3	19.5	21.6	24.2	27.8	32.0	35.5	39.6	43.6	51.7	58.8	66.3	69.8	77.4	84.9	99.2	114.2
3.02	23.3	26.8	29.9	31.9	34.4	37.9	41.9	45.4	49.4	53.5	61.5	68.5	76.0	79.5	87.0	94.5	108.8	123.8
3.05	17.6	21.2	24.3	26.3	28.9	32.4	36.5	40.0	44.1	48.1	56.1	63.2	70.7	74.2	81.7	89.2	103.5	118.5
3.06	20.4	24.0	27.0	29.0	31.6	35.1	39.1	42.7	46.7	50.7	58.7	65.8	73.3	76.8	84.3	91.8	106.1	121.1
3.07	21.8	25.3	28.4	30.4	32.9	36.4	40.5	44.0	48.0	52.0	60.0	67.0	74.6	78.1	85.6	93.1	107.3	122.4
3.11	---	---	---	---	---	---	19.8	23.7	28.1	32.3	40.7	47.9	55.5	59.1	66.7	74.3	88.6	103.7
3.15	14.7	18.4	21.6	23.7	26.3	29.9	34.0	37.5	41.6	45.6	53.7	60.7	68.3	71.8	79.3	86.8	101.1	116.1
3.18	18.4	22.0	25.1	27.2	29.7	33.3	37.3	40.8	44.9	48.9	56.9	64.0	71.5	75.0	82.5	90.0	104.3	119.3
3.20	---	16.5	19.7	21.9	24.5	28.1	32.2	35.8	39.9	43.9	52.0	59.1	66.6	70.1	77.7	85.2	99.5	114.5
3.20	20.5	24.1	27.2	29.2	31.7	35.3	39.3	42.8	46.8	50.9	58.9	65.9	73.4	76.9	84.4	92.0	106.2	121.2
3.22	21.9	25.5	28.5	30.5	33.0	36.6	40.6	44.1	48.1	52.2	60.2	67.2	74.7	78.2	85.7	93.2	107.5	122.5
3.26	14.8	18.6	21.7	23.8	26.4	30.0	34.1	37.7	41.7	45.8	53.8	60.9	68.4	71.9	79.5	87.0	101.3	116.3
3.27	---	---	---	---	18.4	22.2	26.5	30.2	34.3	38.5	46.6	53.7	61.3	64.9	72.4	80.0	94.3	109.4
3.30	17.8	21.5	24.6	26.6	29.2	32.7	36.8	40.3	44.4	48.4	56.4	63.5	71.0	74.5	82.0	89.5	103.8	118.8
3.36	20.7	24.2	27.3	29.3	31.9	35.4	39.4	43.0	47.0	51.0	59.0	66.1	73.6	77.1	84.6	92.1	106.4	121.4
3.37	14.9	18.7	21.9	24.0	26.6	30.2	34.2	37.8	41.9	45.9	54.0	61.0	68.6	72.1	79.6	87.1	101.4	116.4
	0.88	**0.90**	**0.93**	**0.95**	**0.97**	**0.99**	**1.01**	**1.03**	**1.05**	**1.07**	**1.10**	**1.12**	**1.15**	**1.16**	**1.18**	**1.20**	**1.23**	**1.26**
3.39	22.0	25.6	28.6	30.7	33.2	36.7	40.7	44.3	48.3	52.3	60.3	67.3	74.9	78.4	85.9	93.4	107.7	122.7
3.42	---	16.8	20.0	22.1	24.8	28.4	32.5	36.1	40.2	44.2	52.3	59.4	66.9	70.4	78.0	85.5	99.8	114.8
3.46	18.7	22.3	25.4	27.4	30.0	33.5	37.6	41.1	45.2	49.2	57.2	64.3	71.8	75.3	82.8	90.3	104.6	119.6
3.50	15.0	18.8	22.0	24.1	26.7	30.3	34.4	37.9	42.0	46.0	54.1	61.2	68.7	72.2	79.7	87.3	101.6	116.6
3.53	20.8	24.4	27.4	29.5	32.0	35.5	39.6	43.1	47.1	51.2	59.2	66.2	73.7	77.2	84.8	92.3	106.5	121.5
3.53	12.9	16.9	20.1	22.3	24.9	28.5	32.6	36.2	40.3	44.4	52.5	59.5	67.1	70.6	78.1	85.6	99.9	115.0
3.54	---	---	---	---	18.7	22.6	26.9	30.6	34.7	38.9	47.1	54.2	61.8	65.3	72.9	80.4	94.8	109.8
3.61	18.8	22.4	25.5	27.6	30.1	33.7	37.7	41.3	45.3	49.3	57.4	64.4	71.9	75.5	83.0	90.5	104.8	119.8
3.66	13.0	17.0	20.3	22.4	25.0	28.7	32.8	36.4	40.4	44.5	52.6	59.7	67.2	70.7	78.3	85.8	100.1	115.1
3.71	20.9	24.5	27.6	29.6	32.2	35.7	39.7	43.3	47.3	51.3	59.3	66.4	73.9	77.4	84.9	92.4	106.7	121.7
3.75	---	---	---	16.1	19.0	22.9	27.2	30.8	35.0	39.1	47.3	54.5	62.1	65.6	73.2	80.7	95.0	110.1
3.75	18.2	21.9	25.0	27.0	29.6	33.2	37.2	40.8	44.8	48.8	56.9	63.9	71.4	75.0	82.5	90.0	104.3	119.3
3.78	15.3	19.1	22.3	24.4	27.0	30.6	34.7	38.2	42.3	46.3	54.4	61.5	69.0	72.5	80.0	87.6	101.9	116.9
3.79	18.9	22.6	25.7	27.7	30.3	33.8	37.9	41.4	45.5	49.5	57.5	64.6	72.1	75.6	83.1	90.6	104.9	119.9
3.80	13.1	17.1	20.4	22.5	25.2	28.8	32.9	36.5	40.6	44.6	52.7	59.8	67.4	70.9	78.4	85.9	100.2	115.3
	0.85	**0.88**	**0.92**	**0.93**	**0.95**	**0.97**	**0.99**	**1.00**	**1.02**	**1.04**	**1.08**	**1.10**	**1.13**	**1.14**	**1.16**	**1.18**	**1.22**	**1.25**

NOTE: Selection program VIA-VISA available at www.ptwizard.com.

SELECTION

DODGE®

B	S-L CLASSIC

BX	CLASSIC COG

STOCK DRIVE SELECTIONS

Ratio	Stock Shv. Datum Diam.		3500 RPM Driver			1750 RPM Driver			1160 RPM Driver			Belt Size/Center Distance							
			Driven	HP Per Belt		Driven	HP Per Belt		Driven	HP Per Belt		B35	B38	B42	B46	B51	B55	B60	B64
	Driver	Driven	RPM	B	BX	RPM	B	BX	RPM	B	BX	BX35	BX38	BX42	BX46	BX51	BX55	BX60	BX64
3.91	7.40	30.00	895	---	---	447	13.11	13.98	296	9.81	10.44	---	---	---	---	---	---	---	---
3.93	3.80	16.00	890	5.03	10.50	445	3.99	6.81	295	3.07	5.01	---	---	---	---	---	11.2	14.0	16.2
3.98	3.60	15.40	879	4.15	9.83	440	3.43	6.36	291	2.68	4.68	---	---	---	---	9.7	12.0	14.8	17.0
3.99	6.00	25.00	878	12.81	16.16	439	9.79	11.41	291	7.29	8.43	---	---	---	---	---	---	---	---
4.10	4.60	20.00	853	8.28	12.94	426	6.18	8.56	283	4.64	6.29	---	---	---	---	---	---	---	---
4.11	4.20	18.40	851	6.71	11.77	425	5.09	7.70	282	3.86	5.65	---	---	---	---	---	---	---	13.3
4.13	3.60	16.00	847	4.15	9.83	424	3.43	6.36	281	2.68	4.68	---	---	---	---	---	11.3	14.2	16.3
4.19	3.40	15.40	835	3.24	9.13	418	2.86	5.90	277	2.27	4.35	---	---	---	---	9.8	12.2	14.9	17.1
4.24	6.80	30.00	825	14.63	17.35	413	11.72	12.91	274	8.74	9.60	---	---	---	---	---	---	---	---
4.26	5.60	25.00	823	11.68	15.39	411	8.79	10.62	273	6.54	7.83	---	---	---	---	---	---	---	---
4.28	8.60	38.00	818	---	---	409	15.71	15.95	271	11.87	12.07	---	---	---	---	---	---	---	---
4.30	4.00	18.40	813	5.89	11.15	407	4.55	7.26	270	3.47	5.33	---	---	---	---	---	---	---	13.4
4.35	3.40	16.00	804	3.25	9.14	402	2.86	5.91	267	2.28	4.35	---	---	---	---	---	11.4	14.3	16.5
4.40	5.40	25.00	795	11.07	14.96	397	8.28	10.22	263	6.17	7.53	---	---	---	---	---	---	---	---
4.46	4.20	20.00	784	6.72	11.77	392	5.10	7.70	260	3.86	5.66	---	---	---	---	---	---	---	---
4.49	6.40	30.00	779	13.80	16.82	390	10.77	12.17	258	8.02	9.02	---	---	---	---	---	---	---	---
4.51	3.80	18.40	776	5.04	10.50	388	3.99	6.82	257	3.08	5.01	---	---	---	---	---	---	---	13.5
4.56	5.20	25.00	767	10.42	14.50	384	7.76	9.82	254	5.79	7.22	---	---	---	---	---	---	---	---
4.67	4.00	20.00	750	5.89	11.15	375	4.55	7.26	248	3.47	5.33	---	---	---	---	---	---	---	---
4.73	5.00	25.00	740	9.74	14.01	370	7.24	9.41	245	5.41	6.92	---	---	---	---	---	---	---	---
4.74	3.60	18.40	739	4.16	9.83	369	3.43	6.36	245	2.68	4.68	---	---	---	---	---	---	11.2	13.6
4.77	6.00	30.00	733	12.81	16.17	367	9.79	11.41	243	7.29	8.43	---	---	---	---	---	---	---	---
4.89	3.80	20.00	715	5.04	10.51	358	3.99	6.82	237	3.08	5.01	---	---	---	---	---	---	---	---
4.94	7.40	38.00	708	---	---	354	13.11	13.98	235	9.81	10.45	---	---	---	---	---	---	---	---
4.99	3.40	18.40	701	3.25	9.14	351	2.87	5.91	232	2.28	4.35	---	---	---	---	---	---	11.3	13.7
ARC-LENGTH CORRECTION FACTOR —>												**---**	**---**	**---**	**---**	**0.75**	**0.77**	**0.80**	**0.82**
5.09	5.60	30.00	687	11.69	15.39	344	8.79	10.63	228	6.55	7.83	---	---	---	---	---	---	---	---
5.11	4.60	25.00	685	8.29	12.95	342	6.18	8.57	227	4.64	6.29	---	---	---	---	---	---	---	---
5.14	3.60	20.00	681	4.16	9.84	340	3.43	6.37	226	2.68	4.68	---	---	---	---	---	---	---	---
5.27	5.40	30.00	664	11.07	14.96	332	8.28	10.23	220	6.17	7.53	---	---	---	---	---	---	---	---
5.36	6.80	38.00	653	14.64	17.35	327	11.73	12.91	217	8.75	9.60	---	---	---	---	---	---	---	---
5.41	3.40	20.00	646	3.25	9.14	323	2.87	5.91	214	2.28	4.35	---	---	---	---	---	---	---	---
5.46	5.20	30.00	641	10.42	14.50	320	7.76	9.82	212	5.79	7.23	---	---	---	---	---	---	---	---
5.56	4.20	25.00	629	6.72	11.78	315	5.10	7.70	209	3.87	5.66	---	---	---	---	---	---	---	---
5.66	5.00	30.00	618	9.75	14.01	309	7.24	9.41	205	5.41	6.92	---	---	---	---	---	---	---	---
5.67	6.40	38.00	617	13.80	16.83	308	10.77	12.18	204	8.02	9.02	---	---	---	---	---	---	---	---
ARC-LENGTH CORRECTION FACTOR —>												**---**	**---**	**---**	**---**	**---**	**---**	**---**	**---**
5.82	4.00	25.00	602	5.90	11.16	301	4.55	7.26	199	3.47	5.34	---	---	---	---	---	---	---	---
6.03	6.00	38.00	580	12.82	16.18	290	9.79	11.41	192	7.29	8.43	---	---	---	---	---	---	---	---
6.10	3.80	25.00	574	5.04	10.51	287	3.99	6.82	190	3.08	5.01	---	---	---	---	---	---	---	---
6.12	4.60	30.00	572	8.30	12.95	286	6.18	8.57	190	4.65	6.29	---	---	---	---	---	---	---	---
6.40	3.60	25.00	547	4.16	9.84	273	3.43	6.37	181	2.68	4.68	---	---	---	---	---	---	---	---
6.44	5.60	38.00	544	11.69	15.40	272	8.79	10.63	180	6.55	7.84	---	---	---	---	---	---	---	---
6.66	4.20	30.00	526	6.73	11.78	263	5.10	7.71	174	3.87	5.66	---	---	---	---	---	---	---	---
6.74	3.40	25.00	519	3.26	9.15	259	2.87	5.91	172	2.28	4.35	---	---	---	---	---	---	---	---
6.90	5.20	38.00	507	10.43	14.50	254	7.77	9.82	168	5.79	7.23	---	---	---	---	---	---	---	---
6.96	4.00	30.00	503	5.90	11.16	251	4.55	7.27	167	3.47	5.34	---	---	---	---	---	---	---	---
ARC-LENGTH CORRECTION FACTOR —>												**---**	**---**	**---**	**---**	**---**	**---**	**---**	**---**
7.16	5.00	38.00	489	9.75	14.01	245	7.24	9.41	162	5.41	6.92	---	---	---	---	---	---	---	---
7.30	3.80	30.00	480	5.05	10.51	240	4.00	6.82	159	3.08	5.01	---	---	---	---	---	---	---	---
7.67	3.60	30.00	457	4.17	9.84	228	3.44	6.37	151	2.68	4.68	---	---	---	---	---	---	---	---
7.73	4.60	38.00	453	8.30	12.95	226	6.18	8.57	150	4.65	6.30	---	---	---	---	---	---	---	---
8.07	3.40	30.00	433	3.26	9.15	217	2.87	5.91	144	2.28	4.35	---	---	---	---	---	---	---	---
8.41	4.20	38.00	416	6.73	11.79	208	5.10	7.71	138	3.87	5.66	---	---	---	---	---	---	---	---
8.80	4.00	38.00	398	5.90	11.16	199	4.55	7.27	132	3.48	5.34	---	---	---	---	---	---	---	---
9.22	3.80	38.00	380	5.05	10.52	190	4.00	6.82	126	3.08	5.01	---	---	---	---	---	---	---	---
9.69	3.60	38.00	361	4.17	9.85	181	3.44	6.37	120	2.68	4.68	---	---	---	---	---	---	---	---
10.20	3.40	38.00	343	3.26	9.15	172	2.87	5.91	114	2.28	4.35	---	---	---	---	---	---	---	---
ARC-LENGTH CORRECTION FACTOR —>												**---**	**---**	**---**	**---**	**---**	**---**	**---**	**---**

NOTE: Selection program VIA-VISA available at www.ptwizard.com.

DODGE®

B	S-L CLASSIC	BX	CLASSIC COG

STOCK DRIVE SELECTIONS

Ratio	Belt Size/Center Distance																	
	B68 BX68	B75 BX75	B81 BX81	B85 BX85	B90 BX90	B97 BX97	B105 BX105	B112 BX112	B120 BX120	B128 BX128	B144 BX144	B158 BX158	B173 BX173	B180 BX180	B195 BX195	B210 BX210	B240 BX240	B270 BX270
3.91	---	---	---	---	---	---	21.0	25.0	29.4	33.6	42.0	49.2	56.9	60.5	68.1	75.7	90.1	105.2
3.93	18.3	22.0	25.1	27.2	29.7	33.3	37.4	40.9	44.9	49.0	57.0	64.1	71.6	75.1	82.6	90.2	104.4	119.5
3.98	19.1	22.7	25.8	27.9	30.4	34.0	38.0	41.6	45.6	49.6	57.7	64.7	72.2	75.8	83.3	90.8	105.1	120.1
3.99	---	---	---	16.3	19.2	23.1	27.4	31.1	35.3	39.4	47.6	54.7	62.3	65.9	73.5	81.0	95.3	110.4
4.10	13.4	17.4	20.7	22.8	25.4	29.1	33.2	36.8	40.9	44.9	53.0	60.1	67.7	71.2	78.7	86.2	100.5	115.6
4.11	15.5	19.4	22.5	24.6	27.2	30.8	34.9	38.5	42.6	46.6	54.7	61.8	69.3	72.8	80.3	87.9	102.2	117.2
4.13	18.5	22.1	25.3	27.3	29.9	33.4	37.5	41.0	45.1	49.1	57.2	64.2	71.7	75.3	82.8	90.3	104.6	119.6
4.19	19.2	22.9	25.9	28.0	30.6	34.1	38.2	41.7	45.7	49.8	57.8	64.9	72.4	75.9	83.4	90.9	105.2	120.2
4.24	---	---	---	---	---	---	21.4	25.4	29.8	34.0	42.4	49.7	57.3	60.9	68.5	76.1	90.5	105.6
4.26	---	---	---	16.5	19.5	23.4	27.7	31.4	35.6	39.7	47.9	55.0	62.6	66.2	73.7	81.3	95.6	110.7
4.28	---	---	---	---	---	---	---	---	---	23.8	33.0	40.7	48.6	52.3	60.0	67.7	82.3	97.5
4.30	15.7	19.5	22.7	24.8	27.4	31.0	35.1	38.6	42.7	46.8	54.8	61.9	69.4	73.0	80.5	88.0	102.3	117.3
4.35	18.6	22.3	25.4	27.4	30.0	33.6	37.6	41.2	45.2	49.3	57.3	64.4	71.9	75.4	82.9	90.5	104.7	119.8
4.40	---	---	---	16.7	19.6	23.5	27.8	31.5	35.7	39.8	48.0	55.2	62.8	66.3	73.9	81.4	95.8	110.9
4.46	13.6	17.6	20.9	23.0	25.7	29.3	33.5	37.1	41.1	45.2	53.3	60.4	67.9	71.5	79.0	86.5	100.8	115.9
4.49	---	---	---	---	---	---	21.6	25.6	30.0	34.3	42.7	49.9	57.6	61.2	68.8	76.4	90.8	105.9
4.51	15.8	19.6	22.8	24.9	27.5	31.1	35.2	38.8	42.9	46.9	55.0	62.0	69.6	73.1	80.6	88.2	102.5	117.5
4.56	---	---	---	16.8	19.7	23.6	27.9	31.6	35.8	40.0	48.2	55.3	62.9	66.5	74.0	81.6	95.9	111.0
4.67	13.7	17.8	21.0	23.2	25.8	29.5	33.6	37.2	41.3	45.4	53.5	60.5	68.1	71.6	79.2	86.7	101.0	116.0
4.73	---	---	---	16.9	19.8	23.7	28.1	31.8	36.0	40.1	48.3	55.4	63.1	66.6	74.2	81.7	96.1	111.2
4.74	15.9	19.7	22.9	25.0	27.6	31.3	35.4	38.9	43.0	47.0	55.1	62.2	69.7	73.3	80.8	88.3	102.6	117.6
4.77	---	---	---	---	---	---	21.8	25.9	30.3	34.6	43.0	50.2	57.9	61.5	69.1	76.7	91.1	106.2
4.89	13.8	17.9	21.2	23.3	26.0	29.6	33.7	37.3	41.4	45.5	53.6	60.7	68.2	71.8	79.3	86.8	101.1	116.2
4.94	---	---	---	---	---	---	---	---	---	24.5	33.8	41.4	49.4	53.1	60.8	68.6	83.1	98.3
4.99	16.0	19.9	23.1	25.2	27.8	31.4	35.5	39.1	43.1	47.2	55.3	62.3	69.9	73.4	80.9	88.5	102.8	117.8
	0.85	**0.88**	**0.89**	**0.90**	**0.92**	**0.95**	**0.98**	**1.00**	**1.02**	**1.04**	**1.08**	**1.10**	**1.13**	**1.14**	**1.16**	**1.18**	**1.22**	**1.25**
5.09	---	---	---	---	---	---	22.1	26.1	30.5	34.8	43.2	50.5	58.2	61.7	69.4	77.0	91.4	106.5
5.11	14.0	18.0	21.3	17.1	20.1	24.0	28.3	32.0	36.2	40.4	48.6	55.7	63.3	66.9	74.5	82.0	96.4	111.4
5.14	---	---	---	23.4	26.1	29.7	33.9	37.5	41.6	45.6	53.7	60.8	68.4	71.9	79.5	87.0	101.3	116.3
5.27	---	---	---	---	---	---	22.2	26.2	30.6	34.9	43.4	50.6	58.3	61.9	69.5	77.1	91.5	106.7
5.36	---	---	---	---	---	---	---	---	---	24.8	34.2	41.8	49.8	53.5	61.2	69.0	83.5	98.7
5.41	14.1	18.1	21.4	23.6	26.2	29.9	34.0	37.6	41.7	45.8	53.9	61.0	68.5	72.1	79.6	87.1	101.4	116.5
5.46	---	---	---	---	---	---	22.3	26.4	30.8	35.1	43.5	50.8	58.5	62.0	69.7	77.3	91.7	106.8
5.56	---	---	14.8	17.4	20.3	24.2	28.6	32.3	36.5	40.6	48.9	56.0	63.6	67.2	74.8	82.3	96.7	111.7
5.66	---	---	---	---	---	---	22.4	26.5	30.9	35.2	43.6	50.9	58.6	62.2	69.8	77.4	91.8	106.9
5.67	---	---	---	---	---	---	---	---	---	25.1	34.4	42.1	50.1	53.7	61.5	69.2	83.8	99.0
	0.78	**0.81**	**0.84**	**0.88**	**0.90**	**0.93**	**0.96**	**0.99**	**1.01**	**1.03**	**1.07**	**1.10**	**1.12**	**1.14**	**1.16**	**1.18**	**1.22**	**1.25**
5.82	---	---	14.9	17.5	20.4	24.4	28.7	32.4	36.6	40.8	49.0	56.2	63.8	67.3	74.9	82.5	96.8	111.9
6.03	---	---	---	---	---	---	---	---	---	25.3	34.7	42.3	50.3	54.0	61.8	69.5	84.1	99.3
6.10	---	---	15.1	17.6	20.6	24.5	28.8	32.6	36.8	40.9	49.1	56.3	63.9	67.5	75.0	82.6	97.0	112.0
6.12	---	---	---	---	---	17.7	22.7	26.7	31.2	35.5	43.9	51.2	58.9	62.4	70.1	77.7	92.1	107.2
6.40	---	---	15.2	17.7	20.7	24.6	29.0	32.7	36.9	41.1	49.3	56.4	64.1	67.6	75.2	82.8	97.1	112.2
6.44	---	---	---	---	---	---	---	---	---	25.5	34.9	42.6	50.6	54.3	62.1	69.8	84.4	99.6
6.66	---	---	---	---	---	17.9	22.9	27.0	31.4	35.7	44.2	51.4	59.1	62.7	70.4	78.0	92.4	107.5
6.74	---	---	15.3	17.8	20.8	24.7	29.1	32.8	37.0	41.2	49.4	56.6	64.2	67.7	75.3	82.9	97.3	112.3
6.90	---	---	---	---	---	---	---	---	---	25.8	35.2	42.8	50.8	54.5	62.3	70.1	84.6	99.9
6.96	---	---	---	---	---	18.0	23.0	27.1	31.5	35.9	44.3	51.6	59.3	62.9	70.5	78.1	92.5	107.7
	---	**---**	**0.70**	**0.75**	**0.81**	**0.87**	**0.91**	**0.95**	**0.98**	**1.00**	**1.05**	**1.08**	**1.11**	**1.12**	**1.15**	**1.17**	**1.21**	**1.24**
7.16	---	---	---	---	---	---	---	---	---	25.9	35.3	43.0	51.0	54.7	62.5	70.2	84.8	100.0
7.30	---	---	---	---	---	18.1	23.2	27.2	31.7	36.0	44.4	51.7	59.4	63.0	70.7	78.3	92.7	107.8
7.67	---	---	---	---	---	18.3	23.3	27.3	31.8	36.1	44.6	51.8	59.6	63.1	70.8	78.4	92.8	108.0
7.73	---	---	---	---	---	---	---	---	---	26.1	35.5	43.2	51.2	54.9	62.7	70.5	85.1	100.3
8.07	---	---	---	---	---	18.4	23.4	27.5	31.9	36.2	44.7	52.0	59.7	63.3	70.9	78.6	93.0	108.1
8.41	---	---	---	---	---	---	---	---	---	26.4	35.8	43.5	51.5	55.2	63.0	70.8	85.3	100.6
8.80	---	---	---	---	---	---	---	---	21.1	26.5	35.9	43.6	51.6	55.3	63.1	70.9	85.5	100.7
9.22	---	---	---	---	---	---	---	---	21.2	26.6	36.0	43.7	51.8	55.5	63.3	71.0	85.6	100.9
9.69	---	---	---	---	---	---	---	---	21.3	26.7	36.2	43.9	51.9	55.6	63.4	71.2	85.8	101.0
10.20	---	---	---	---	---	---	---	---	21.4	26.8	36.3	44.0	52.0	55.7	63.5	71.3	85.9	101.2
	---	**---**	**---**	**---**	**---**	**0.77**	**0.82**	**0.88**	**0.92**	**0.96**	**1.02**	**1.05**	**1.09**	**1.10**	**1.13**	**1.15**	**1.19**	**1.23**

NOTE: Selection program VIA-VISA available at www.ptwizard.com.

SELECTION

DODGE®

C	S-L CLASSIC	CX	CLASSIC COG

STOCK DRIVE SELECTIONS

Ratio	Stock Shv. Datum Diam.		1750 RPM Driver			1160 RPM Driver			870 RPM Driver			Belt Size/Center Distance								
			Driven	HP Per Belt		Driven	HP Per Belt		Driven	HP Per Belt		C51	C60	C68	C75	C81	C85	C90	C96	C105
	Driver	Driven	RPM	C	CX	RPM	C	CX	RPM	C	CX	CX51	CX60	CX68	CX75	CX81	CX85	CX90	CX96	CX105
1.00	7.0	7.0	1750	12.09	18.97	1160	9.69	14.22	870	7.98	11.39	16.0	20.5	24.5	28.0	31.0	33.0	35.5	38.5	43.0
1.00	7.5	7.5	1750	14.00	20.59	1160	11.17	15.48	870	9.16	12.40	15.2	19.7	23.7	27.2	30.2	32.2	34.7	37.7	42.2
1.00	8.0	8.0	1750	15.84	22.15	1160	12.62	16.71	870	10.33	13.40	14.4	18.9	22.9	26.4	29.4	31.4	33.9	36.9	41.4
1.00	8.5	8.5	1750	17.62	23.65	1160	14.05	17.93	870	11.48	14.39	13.6	18.1	22.1	25.6	28.6	30.6	33.1	36.1	40.6
1.00	9.0	9.0	1750	19.32	25.09	1160	15.45	19.11	870	12.62	15.36	12.8	17.3	21.3	24.8	27.8	29.8	32.3	35.3	39.8
1.00	9.5	9.5	1750	20.94	26.47	1160	16.82	20.28	870	13.74	16.32	12.0	16.5	20.5	24.0	27.0	29.0	31.5	34.5	39.0
1.00	10.0	10.0	1750	22.49	27.78	1160	18.17	21.42	870	14.85	17.26	11.3	15.8	19.7	23.3	26.3	28.3	30.8	33.8	38.3
1.00	10.5	10.5	1750	23.96	29.02	1160	19.49	22.54	870	15.95	18.20	---	15.0	19.0	22.5	25.5	27.5	30.0	33.0	37.5
1.00	11.0	11.0	1750	25.35	30.20	1160	20.78	23.63	870	17.03	19.12	---	14.2	18.2	21.7	24.7	26.7	29.2	32.2	36.7
1.00	12.0	12.0	1750	27.86	32.34	1160	23.27	25.74	870	19.15	20.92	---	12.6	16.6	20.1	23.1	25.1	27.6	30.6	35.1
1.00	13.0	13.0	1750	30.00	34.18	1160	25.64	27.75	870	21.21	22.66	---	---	15.0	18.5	21.5	23.5	26.0	29.0	33.5
1.00	14.0	14.0	1750	31.76	35.70	1160	27.88	29.64	870	23.20	24.36	---	---	---	17.0	20.0	22.0	24.5	27.5	32.0
1.00	16.0	16.0	1750	---	---	1160	31.96	33.10	870	27.00	27.57	---	---	---	---	16.8	18.8	21.3	24.3	28.8
1.05	10.5	11.0	1673	24.35	29.41	1109	19.74	22.79	832	16.14	18.39	---	14.6	18.6	22.1	25.1	27.1	29.6	32.6	37.1
1.05	10.0	10.5	1670	22.89	28.18	1107	18.44	21.69	830	15.05	17.45	10.9	15.4	19.4	22.9	25.9	27.9	30.4	33.4	37.9
1.05	9.5	10.0	1666	21.36	26.88	1104	17.10	20.56	828	13.95	16.53	11.6	16.1	20.1	23.6	26.6	28.6	31.1	34.1	38.6
1.05	9.0	9.5	1662	19.75	25.53	1101	15.74	19.40	826	12.83	15.58	12.4	16.9	20.9	24.4	27.4	29.4	31.9	34.9	39.4
1.06	8.5	9.0	1657	18.07	24.11	1098	14.36	18.23	824	11.71	14.61	13.2	17.7	21.7	25.2	28.2	30.2	32.7	35.7	40.2
1.06	8.0	8.5	1652	16.32	22.63	1095	12.94	17.03	821	10.57	13.64	14.0	18.5	22.5	26.0	29.0	31.0	33.5	36.5	41.0
1.06	7.5	8.0	1646	14.51	21.10	1091	11.51	15.81	818	9.41	12.65	14.8	19.3	23.3	26.8	29.8	31.8	34.3	37.3	41.8
1.07	7.0	7.5	1639	12.62	19.51	1087	10.05	14.57	815	8.24	11.65	15.6	20.1	24.1	27.6	30.6	32.6	35.1	38.1	42.6
1.07	13.0	14.0	1628	30.50	34.76	1079	26.03	28.13	810	21.50	22.95	---	---	14.2	17.7	20.7	22.7	25.3	28.3	32.8
1.08	12.0	13.0	1619	28.48	32.96	1073	23.68	26.15	805	19.46	21.23	---	---	15.8	19.3	22.3	24.3	26.8	29.8	34.3
1.09	11.0	12.0	1609	26.01	30.86	1066	21.22	24.07	800	17.36	19.45	---	13.4	17.4	20.9	23.9	25.9	28.4	31.4	35.9
1.10	10.0	11.0	1596	23.21	28.49	1058	18.65	21.90	794	15.21	17.62	---	15.0	19.0	22.5	25.5	27.5	30.0	33.0	37.5
			ARC-LENGTH CORRECTION FACTOR —>									**0.77**	**0.81**	**0.83**	**0.85**	**0.87**	**0.88**	**0.89**	**0.91**	**0.93**
1.10	9.5	10.5	1589	21.69	27.21	1054	17.32	20.77	790	14.11	16.69	11.2	15.7	19.7	23.2	26.2	28.2	30.7	33.7	38.2
1.11	9.0	10.0	1582	20.09	25.86	1048	15.96	19.63	786	13.00	15.74	12.0	16.5	20.5	24.0	27.0	29.0	31.5	34.5	39.0
1.11	8.5	9.5	1573	18.42	24.46	1043	14.58	18.46	782	11.88	14.79	12.8	17.3	21.3	24.8	27.8	29.8	32.3	35.3	39.8
1.12	8.0	9.0	1564	16.66	22.99	1037	13.18	17.27	777	10.74	13.82	13.6	18.1	22.1	25.6	28.6	30.6	33.1	36.1	40.6
1.12	16.0	18.0	1560	---	---	1034	32.53	33.67	775	27.43	28.00	---	---	---	---	---	17.2	19.7	22.7	27.2
1.13	7.5	8.5	1553	14.86	21.47	1030	11.75	16.06	772	9.59	12.84	14.4	18.9	22.9	26.4	29.4	31.4	33.9	36.9	41.4
1.14	7.0	8.0	1542	13.01	19.89	1022	10.30	14.83	766	8.43	11.84	15.2	19.7	23.7	27.2	30.2	32.2	34.7	37.7	42.2
1.14	10.5	12.0	1538	24.89	29.96	1020	20.11	23.16	765	16.41	18.66	---	13.8	17.8	21.3	24.3	26.3	28.8	31.8	36.3
1.14	14.0	16.0	1537	32.70	36.64	1019	28.51	30.26	764	23.67	24.82	---	---	---	15.4	18.4	20.4	22.9	25.9	30.4
1.15	9.5	11.0	1520	21.94	27.46	1007	17.49	20.94	756	14.24	16.81	10.8	15.3	19.3	22.8	25.8	27.8	30.3	33.3	37.9
1.16	9.0	10.5	1509	20.35	26.12	1000	16.13	19.80	750	13.13	15.87	11.6	16.1	20.1	23.6	26.6	28.6	31.1	34.1	38.6
1.16	12.0	14.0	1507	28.90	33.38	999	23.96	26.43	749	19.66	21.43	---	---	15.0	18.5	21.5	23.5	26.0	29.0	33.5
1.17	8.5	10.0	1498	18.68	24.72	993	14.76	18.63	745	12.01	14.92	12.4	16.9	20.9	24.4	27.4	29.4	31.9	34.9	39.4
1.18	11.0	13.0	1489	26.44	31.30	987	21.51	24.36	740	17.57	19.66	---	12.6	16.6	20.1	23.1	25.1	27.6	30.6	35.1
1.18	8.0	9.5	1486	16.95	23.26	984	13.36	17.45	738	10.88	13.95	13.2	17.7	21.7	25.2	28.2	30.2	32.7	35.7	40.2
1.19	7.5	9.0	1471	15.15	21.74	975	11.93	16.24	731	9.73	12.97	14.0	18.5	22.5	26.0	29.0	31.0	33.5	36.5	41.0
1.19	10.0	12.0	1468	23.65	28.94	973	18.94	22.19	730	15.43	17.84	---	14.1	18.2	21.7	24.7	26.7	29.2	32.2	36.7
1.20	7.0	8.5	1455	13.28	20.17	964	10.49	15.01	723	8.57	11.98	14.8	19.3	23.3	26.8	29.8	31.8	34.3	37.3	41.8
1.21	9.0	11.0	1443	20.65	26.32	956	16.27	19.93	717	13.23	15.97	11.2	15.7	19.7	23.2	26.2	28.2	30.7	33.7	38.2
1.22	13.0	16.0	1430	31.27	35.45	948	26.48	28.58	711	21.84	23.29	---	---	---	16.1	19.1	21.1	23.6	26.6	31.1
1.22	8.5	10.5	1429	18.89	24.92	947	14.89	18.77	710	12.11	15.02	12.0	16.5	20.5	24.0	27.0	29.0	31.5	34.5	39.0
1.23	10.5	13.0	1424	25.24	30.31	944	20.34	23.39	708	16.59	18.84	---	12.9	17.0	20.5	23.5	25.5	28.0	31.0	35.5
1.24	8.0	10.0	1413	17.15	23.48	937	13.49	17.58	703	10.98	14.05	12.8	17.3	21.3	24.8	27.8	29.8	32.3	35.3	39.8
1.24	16.0	20.0	1407	---	---	933	32.84	33.98	699	27.66	28.23	---	---	---	---	---	---	18.1	21.1	25.6
1.25	9.5	12.0	1397	22.29	27.82	926	17.72	21.18	695	14.41	16.99	---	14.5	18.5	22.0	25.0	27.0	29.5	32.5	37.1
1.25	7.5	9.5	1396	15.35	21.94	926	12.07	16.37	694	9.83	13.07	13.6	18.1	22.1	25.6	28.6	30.6	33.1	36.1	40.6
1.26	11.0	14.0	1385	26.73	31.58	918	21.69	24.55	689	17.72	19.80	---	---	15.8	19.3	22.3	24.3	26.8	29.8	34.3
1.27	7.0	9.0	1378	13.48	20.37	913	10.62	15.14	665	8.67	12.08	14.4	18.9	22.9	26.4	29.4	31.4	33.9	36.9	41.4
1.28	14.0	18.0	1370	33.18	37.12	908	28.82	30.58	681	23.91	25.06	---	---	---	---	16.7	18.7	21.2	24.2	28.8
1.28	8.5	11.0	1366	19.04	25.07	906	14.99	18.87	679	12.19	15.09	11.6	16.1	20.1	23.6	26.6	28.6	31.1	34.1	38.6
1.29	10.0	13.0	1358	23.93	29.22	900	19.13	22.38	675	15.57	17.98	---	13.3	17.3	20.8	23.8	25.9	28.4	31.4	35.9
1.30	8.0	10.5	1349	17.31	23.61	894	13.59	17.68	670	11.05	14.13	12.4	16.9	20.9	24.4	27.4	29.4	31.9	34.9	39.4
1.32	7.5	10.0	1329	15.50	22.09	881	12.17	16.47	661	9.91	13.15	13.2	17.7	21.7	25.2	28.2	30.2	32.7	35.7	40.2
1.32	9.0	12.0	1327	20.83	26.60	879	16.45	20.12	660	13.37	16.11	---	14.9	18.9	22.4	25.4	27.4	29.9	32.9	37.4
1.32	10.5	14.0	1325	25.47	30.54	878	20.49	23.54	659	16.70	18.95	---	---	16.1	19.6	22.6	24.7	27.2	30.2	34.7
1.32	12.0	16.0	1323	29.37	33.85	877	24.28	26.74	658	19.90	21.67	---	---	---	16.9	19.9	21.9	24.4	27.4	31.9
1.34	7.0	9.5	1308	13.63	20.52	867	10.72	15.24	650	8.74	12.15	13.9	18.5	22.5	26.0	29.0	31.0	33.5	36.5	41.0
1.35	9.5	13.0	1293	22.52	28.04	857	17.87	21.32	643	14.52	17.10	---	13.7	17.7	21.2	24.2	26.2	28.7	31.7	36.2
1.36	8.0	11.0	1289	17.42	23.73	855	13.67	17.76	641	11.11	14.19	11.9	16.5	20.5	24.0	27.0	29.0	31.5	34.5	39.0
1.37	13.0	18.0	1274	31.61	35.79	845	26.71	28.81	634	22.01	23.46	---	---	---	---	17.4	19.5	22.0	25.0	29.5
1.38	7.5	10.5	1268	15.62	22.21	841	12.24	16.65	631	9.96	13.20	12.7	17.3	21.3	24.8	27.8	29.8	32.3	35.3	39.8
			ARC-LENGTH CORRECTION FACTOR —>									**0.75**	**0.79**	**0.82**	**0.84**	**0.86**	**0.87**	**0.89**	**0.90**	**0.92**

NOTE: Selection program VIA-VISA available at www.ptwizard.com.

DODGE®

C	S-L CLASSIC	CX	CLASSIC COG

STOCK DRIVE SELECTIONS

Ratio	Belt Size/Center Distance																	
	C112 CX112	C120 CX120	C128 CX128	C136 CX136	C144 CX144	C158 CX158	C162 CX162	C173 CX173	C180 CX180	C195 CX195	C210 CX210	C240 CX240	C270 CX270	C300 CX300	C330 CX330	C360 CX360	C390 CX390	C420 CX420
1.00	46.5	50.5	54.5	58.5	62.5	69.5	71.5	77.0	80.5	88.0	95.5	109.5	124.5	139.5	154.5	169.5	184.5	199.5
1.00	45.7	49.7	53.7	57.7	61.7	68.7	70.7	76.2	79.7	87.2	94.7	108.7	123.7	138.7	153.7	168.7	183.7	198.7
1.00	44.9	48.9	52.9	56.9	60.9	67.9	69.9	75.4	78.9	86.4	93.9	107.9	122.9	137.9	152.9	167.9	182.9	197.9
1.00	44.1	48.1	52.1	56.1	60.1	67.1	69.1	74.6	78.1	85.6	93.1	107.1	122.1	137.1	152.1	167.1	182.1	197.1
1.00	43.3	47.3	51.3	55.3	59.3	66.3	68.3	73.8	77.3	84.8	92.3	106.3	121.3	136.3	151.3	166.3	181.3	196.3
1.00	42.5	46.5	50.5	54.5	58.5	65.5	67.5	73.0	76.5	84.0	91.5	105.5	120.5	135.5	150.5	165.5	180.5	195.5
1.00	41.8	45.8	49.7	53.7	57.7	64.8	66.8	72.3	75.8	83.3	90.8	104.8	119.7	134.8	149.7	164.8	179.8	194.7
1.00	41.0	45.0	49.0	53.0	57.0	64.0	66.0	71.5	75.0	82.5	90.0	104.0	119.0	134.0	149.0	164.0	179.0	194.0
1.00	40.2	44.2	48.2	52.2	56.2	63.2	65.2	70.7	74.2	81.7	89.2	103.2	118.2	133.2	148.2	163.2	178.2	193.2
1.00	38.6	42.6	46.6	50.6	54.6	61.6	63.6	69.1	72.6	80.1	87.6	101.6	116.6	131.6	146.6	161.6	176.6	191.6
1.00	37.0	41.0	45.0	49.0	53.0	60.0	62.0	67.5	71.0	78.5	86.0	100.0	115.0	130.0	145.0	160.0	175.0	190.0
1.00	35.5	39.5	43.5	47.5	51.5	58.5	60.5	66.0	69.5	77.0	84.5	98.5	113.5	128.5	143.5	158.5	173.5	188.5
1.00	32.3	35.3	40.3	44.3	48.3	55.3	57.3	62.8	66.3	73.8	81.3	95.3	110.3	125.3	140.3	155.3	170.3	185.3
1.05	40.6	44.6	48.6	52.6	56.6	63.6	65.6	71.1	74.6	82.1	89.6	103.6	118.6	133.6	148.6	163.6	178.6	193.6
1.05	41.4	45.4	49.4	53.4	57.4	64.4	66.4	71.9	75.4	82.9	90.4	104.4	119.4	134.4	149.4	164.4	179.4	194.4
1.05	42.1	48.1	50.1	54.1	58.1	65.1	67.1	72.6	76.1	83.6	91.1	105.1	120.1	135.1	150.1	165.1	180.1	195.1
1.05	42.9	46.9	50.9	54.9	58.9	65.9	67.9	73.4	76.9	84.4	91.9	105.9	120.9	135.9	150.9	165.9	180.9	195.9
1.06	43.7	47.7	51.7	55.7	59.7	66.7	68.7	74.2	77.7	85.2	92.7	106.7	121.7	136.7	151.7	166.7	181.7	196.7
1.06	44.5	48.5	52.5	56.5	60.5	67.5	69.5	75.0	78.5	86.0	93.5	107.5	122.5	137.5	152.5	167.5	182.5	197.5
1.06	45.3	49.3	53.3	57.3	61.3	68.3	70.3	75.8	79.3	86.8	94.3	108.3	123.3	138.3	153.3	168.3	183.3	198.3
1.07	48.1	50.1	54.1	58.1	62.1	69.1	71.1	76.6	80.1	87.6	95.1	109.1	124.1	139.1	154.1	169.1	184.1	199.1
1.07	36.3	40.3	44.3	48.3	52.3	59.3	61.3	66.8	70.3	77.8	85.3	99.3	114.3	129.3	144.3	159.3	174.3	189.3
1.08	37.8	41.8	45.8	49.8	53.8	60.8	62.8	68.3	71.8	79.3	86.8	100.8	115.8	130.8	145.8	160.8	175.8	190.8
1.09	39.4	43.4	47.4	51.4	55.4	62.4	64.4	69.9	73.4	80.9	88.4	102.4	117.4	132.4	147.4	162.4	177.4	192.4
1.10	41.0	45.0	49.0	53.0	57.0	64.0	66.0	71.5	75.0	82.5	90.0	104.0	119.0	134.0	149.0	164.0	179.0	194.0
	0.94	**0.96**	**0.97**	**0.99**	**1.00**	**1.02**	**1.03**	**1.04**	**1.05**	**1.07**	**1.08**	**1.11**	**1.14**	**1.16**	**1.18**	**1.20**	**1.22**	**1.24**
1.10	41.7	45.7	49.7	53.7	57.7	64.7	66.7	72.2	75.7	83.2	90.7	104.7	119.7	134.7	149.7	164.7	179.7	194.7
1.11	42.5	46.5	50.5	54.5	58.5	65.5	67.5	73.0	76.5	84.0	91.5	105.5	120.5	135.5	150.5	165.5	180.5	195.5
1.11	43.3	47.3	51.3	55.3	59.3	66.3	68.3	73.8	77.3	84.8	92.3	106.3	121.3	136.3	151.3	166.3	181.3	196.3
1.12	44.1	48.1	52.1	56.1	60.1	67.1	69.1	74.6	78.1	85.6	93.1	107.1	122.1	137.1	152.1	167.1	182.1	197.1
1.12	30.7	34.7	38.7	42.7	46.7	53.8	55.8	61.3	64.8	72.3	79.8	93.8	108.8	123.8	138.8	153.8	168.8	183.8
1.13	44.9	48.9	52.9	56.9	60.9	67.9	69.9	75.4	78.9	86.4	93.9	107.9	122.9	137.9	152.9	167.9	182.9	197.9
1.14	45.7	49.7	53.7	57.7	61.7	68.7	70.7	76.2	79.7	87.2	94.7	108.7	123.7	138.7	153.7	168.7	183.7	198.7
1.14	39.8	43.8	47.8	51.8	55.8	62.8	64.8	70.3	73.8	81.3	88.8	102.8	117.8	132.8	147.8	162.8	177.8	192.8
1.14	33.9	37.9	41.9	45.9	49.9	56.9	58.9	64.4	67.9	75.4	82.9	96.9	111.9	126.9	141.9	156.9	171.9	186.9
1.15	41.4	45.4	49.4	53.4	57.4	64.4	66.4	71.9	75.4	82.9	90.4	104.4	119.4	134.4	149.4	164.4	179.4	194.4
1.16	42.1	46.1	50.1	54.1	58.1	65.1	67.1	72.6	76.1	83.6	91.1	105.1	120.1	135.1	150.1	165.1	180.1	195.1
1.16	37.0	41.0	45.0	49.0	53.0	60.0	62.0	67.5	71.0	78.5	86.0	100.0	115.0	130.0	145.0	160.0	175.0	190.0
1.17	42.9	46.9	50.9	54.9	58.9	65.9	67.9	73.4	76.9	84.4	91.9	105.9	120.9	135.9	150.9	165.9	180.9	195.9
1.18	38.6	42.6	48.6	50.6	54.6	61.6	63.6	69.1	72.6	80.1	87.6	101.6	116.6	131.6	146.6	161.6	176.6	191.6
1.18	43.7	47.7	51.7	55.7	59.7	66.7	68.7	74.2	77.7	85.2	92.7	106.7	121.7	136.7	151.7	166.7	181.7	196.7
1.19	44.5	48.5	52.5	56.5	60.5	67.5	69.5	75.0	78.5	86.0	93.5	107.5	122.5	137.5	152.5	167.5	182.5	197.5
1.19	40.2	44.2	48.2	52.2	56.2	63.2	65.2	70.7	74.2	81.7	89.2	103.2	118.2	133.2	148.2	163.2	178.2	193.2
1.20	45.3	49.3	53.3	57.3	61.3	68.3	70.3	75.8	79.3	86.8	94.3	108.3	123.3	138.3	153.3	168.3	183.3	198.3
1.21	41.7	45.7	49.7	53.7	57.7	64.7	66.7	72.2	75.7	83.2	90.7	104.7	119.7	134.7	149.7	164.7	179.7	194.7
1.22	34.7	38.7	42.7	46.7	50.7	57.7	59.7	65.2	68.7	76.2	83.7	97.7	112.7	127.7	142.7	157.7	172.7	187.7
1.22	42.5	46.5	50.5	54.5	58.5	65.5	67.5	73.0	76.5	84.0	91.5	105.5	120.5	135.5	150.5	165.5	180.5	195.5
1.23	39.0	43.0	47.0	51.0	55.0	62.0	64.0	69.5	73.0	80.5	88.0	102.0	117.0	132.0	147.0	162.0	177.0	192.0
1.24	43.3	47.3	51.3	55.3	59.3	66.3	68.3	73.8	77.3	84.8	92.3	106.3	121.3	136.3	151.3	166.3	181.3	196.3
1.24	29.1	33.1	37.1	41.1	45.1	52.2	54.2	59.7	63.2	70.7	78.2	92.2	107.2	122.2	137.2	152.2	167.2	182.2
1.25	40.6	44.6	48.6	52.6	56.6	63.6	65.6	71.1	74.6	82.1	89.6	103.6	118.6	133.6	148.6	163.6	178.6	193.6
1.25	44.1	48.1	52.1	56.1	60.1	67.1	69.1	74.6	78.1	85.6	93.1	107.1	122.1	137.1	152.1	167.1	182.1	197.1
1.26	37.8	41.8	45.8	49.8	53.8	60.8	62.8	68.3	71.8	79.3	86.8	100.8	115.8	130.8	145.8	160.8	175.8	190.8
1.27	44.9	48.9	52.9	56.9	60.9	67.9	69.9	75.4	78.9	86.4	93.9	107.9	122.9	137.9	152.9	167.9	182.9	197.9
1.28	32.3	36.3	40.3	44.3	48.3	55.3	57.3	62.8	66.3	73.8	81.3	95.3	110.3	125.3	140.3	155.3	170.3	185.3
1.28	42.1	46.1	50.1	54.1	58.1	65.1	67.1	72.6	76.1	83.6	91.1	105.1	120.1	135.1	150.1	165.1	180.1	195.1
1.29	39.4	43.4	47.4	51.4	55.4	62.4	64.4	69.9	73.4	80.9	88.4	102.4	117.4	132.4	147.4	162.4	177.4	192.4
1.30	42.9	46.9	50.9	54.9	58.9	65.9	67.9	73.4	76.9	84.4	91.9	105.9	120.9	135.9	150.9	165.9	180.9	195.9
1.32	43.7	47.7	51.7	55.7	59.7	66.7	68.7	74.2	77.7	85.2	92.7	106.7	121.7	136.7	151.7	166.7	181.7	196.7
1.32	40.9	44.9	48.9	52.9	56.9	63.9	65.9	71.4	74.9	82.5	90.0	104.0	119.0	134.0	149.0	164.0	179.0	194.0
1.32	38.2	42.2	46.2	50.2	54.2	61.2	63.2	68.7	72.2	79.7	87.2	101.2	116.2	131.2	146.2	161.2	176.2	191.2
1.32	35.4	39.4	43.4	47.4	51.4	58.4	60.4	65.9	69.4	76.9	84.4	98.4	113.5	128.5	143.5	158.5	173.5	188.5
1.34	44.5	48.5	52.5	56.5	60.5	67.5	69.5	75.0	78.5	86.0	93.5	107.5	122.5	137.5	152.5	167.5	182.5	197.5
1.35	39.7	43.8	47.8	51.8	55.8	62.8	64.8	70.3	73.8	81.3	88.8	102.8	117.8	132.8	147.8	162.8	177.8	192.8
1.36	42.5	46.5	50.5	54.5	58.5	65.5	67.5	73.0	76.5	84.0	91.5	105.5	120.5	135.5	150.5	165.5	180.5	195.5
1.37	33.0	37.0	41.0	45.0	49.1	56.1	58.1	63.6	67.1	74.6	82.1	96.1	111.1	126.1	141.1	156.1	171.1	186.1
1.38	43.3	47.3	51.3	55.3	59.3	66.3	68.3	73.8	77.3	84.8	92.3	106.3	121.3	136.3	151.3	166.3	181.3	196.3
	0.94	**0.95**	**0.97**	**0.98**	**0.99**	**1.02**	**1.03**	**1.04**	**1.05**	**1.06**	**1.08**	**1.11**	**1.14**	**1.16**	**1.18**	**1.20**	**1.22**	**1.24**

NOTE: Selection program VIA-VISA available at www.ptwizard.com.

SELECTION

DODGE®

C	S-L CLASSIC

CX	CLASSIC COG

STOCK DRIVE SELECTIONS

Ratio	Stock Shv. Datum Diam.		1750 RPM Driver			1160 RPM Driver			870 RPM Driver			Belt Size/Center Distance								
			Driven	HP Per Belt		Driven	HP Per Belt		Driven	HP Per Belt		C51	C60	C68	C75	C81	C85	C90	C96	C105
	Driver	Driven	RPM	C	CX	RPM	C	CX	RPM	C	CX	CX51	CX60	CX68	CX75	CX81	CX85	CX90	CX96	CX105
1.38	10.0	14.0	1264	24.12	29.40	838	19.25	22.50	628	15.66	18.07	---	12.4	16.5	20.0	23.0	25.0	27.5	30.5	35.1
1.39	8.5	12.0	1256	19.26	25.29	833	15.14	19.01	624	12.29	15.20	10.7	15.3	19.3	22.8	25.8	27.8	30.3	33.3	37.8
1.41	7.0	10.0	1245	13.74	20.63	825	10.79	15.31	619	8.80	12.21	13.5	18.0	22.1	25.6	28.6	30.6	33.1	36.1	40.6
1.42	14.0	20.0	1235	33.44	37.38	819	28.99	30.75	614	24.03	25.19	---	---	---	---	---	---	19.5	22.6	27.1
1.43	9.0	13.0	1228	21.00	26.77	814	16.57	20.23	610	13.46	16.20	---	14.0	18.1	21.6	24.6	26.6	29.1	32.1	36.6
1.44	11.0	16.0	1216	27.05	31.90	806	21.91	24.76	605	17.88	19.96	---	---	14.0	17.6	20.6	22.6	25.1	28.1	32.7
1.44	7.5	11.0	1213	15.71	22.30	804	12.30	16.61	603	10.01	13.25	12.3	16.8	20.9	24.4	27.4	29.4	31.9	34.9	39.4
1.45	9.5	14.0	1203	22.67	28.19	797	17.97	21.42	598	14.60	17.17	---	12.8	16.9	20.4	23.4	25.4	27.9	30.9	35.4
1.47	7.0	10.5	1188	13.83	20.71	788	10.85	15.37	591	8.84	12.25	13.1	17.6	21.6	25.2	28.2	30.2	32.7	35.7	40.2
1.48	8.0	12.0	1185	17.59	23.90	786	13.78	17.87	589	11.19	14.27	11.1	15.6	19.6	23.2	26.2	28.2	30.7	33.7	38.2
1.48	12.0	18.0	1179	29.61	34.09	782	24.43	26.90	596	20.02	21.79	---	---	---	15.1	18.2	20.2	22.7	25.7	30.3
1.49	16.0	24.0	1176	---	---	780	33.13	34.26	585	27.88	28.45	---	---	---	---	---	---	---	---	22.2
1.50	10.5	16.0	1163	25.74	30.80	771	20.67	23.72	578	16.83	19.08	---	---	14.4	17.9	21.0	23.0	25.5	28.5	33.0
1.51	8.5	13.0	1162	19.39	25.43	770	15.23	19.10	578	12.36	15.27	---	14.4	18.4	22.0	25.0	27.0	29.5	32.5	37.0
1.52	13.0	20.0	1150	31.80	35.97	762	26.83	28.93	571	22.10	23.55	---	---	---	---	---	17.7	20.2	23.3	27.8
1.53	9.0	14.0	1142	21.12	26.89	757	16.65	20.31	568	13.51	16.25	---	13.2	17.2	20.7	23.8	25.8	28.3	31.3	35.8
1.54	7.0	11.0	1136	13.90	20.78	753	10.89	15.41	565	8.87	12.28	12.7	17.2	21.2	24.7	27.7	29.8	32.3	35.3	39.8
1.57	7.5	12.0	1115	15.83	22.42	739	12.39	16.69	554	10.07	13.31	11.4	16.0	20.0	23.5	26.5	28.6	31.1	34.1	38.6
1.58	10.0	16.0	1110	24.33	29.62	735	19.39	22.64	552	15.77	18.18	---	---	14.7	18.3	21.3	23.3	25.9	28.9	33.4
1.60	8.0	13.0	1097	17.69	24.00	727	13.85	17.94	545	11.25	14.32	---	14.8	18.8	22.3	25.3	27.4	29.9	32.9	37.4
1.61	11.0	18.0	1084	27.21	32.06	719	22.01	24.87	539	17.96	20.04	---	---	---	15.8	18.9	20.9	23.4	26.5	31.0
1.62	8.5	14.0	1082	19.48	25.52	717	15.29	19.16	538	12.41	15.31	---	13.5	17.6	21.1	24.1	26.1	28.7	31.7	36.2
1.65	12.0	20.0	1064	29.74	34.22	705	24.52	26.99	529	20.08	21.85	---	---	---	---	16.3	18.4	20.9	24.0	28.5
1.66	9.5	16.0	1056	22.83	28.36	700	18.08	21.53	525	14.68	17.26	---	---	15.1	18.6	21.7	23.7	26.2	29.3	33.8
1.67	16.0	27.0	1047	---	---	694	33.22	34.36	521	27.95	28.52	---	---	---	---	---	---	---	---	---
ARC-LENGTH CORRECTION FACTOR —>												**0.75**	**0.79**	**0.82**	**0.84**	**0.86**	**0.87**	**0.88**	**0.90**	**0.92**
1.68	7.0	12.0	1044	13.99	20.87	692	10.95	15.48	519	8.92	12.33	11.8	16.3	20.4	23.9	26.9	28.9	31.4	34.4	39.0
1.69	10.5	18.0	1037	25.87	30.93	687	20.75	23.80	515	16.90	19.15	---	---	---	16.1	19.2	21.2	23.8	26.8	31.4
1.69	14.0	24.0	1033	33.67	37.62	685	29.15	30.91	513	24.15	25.31	---	---	---	---	---	---	---	---	23.6
1.70	7.5	13.0	1032	15.91	22.50	684	12.44	16.74	513	10.11	13.35	10.5	15.1	19.2	22.7	25.7	27.7	30.2	33.2	37.8
1.71	8.0	14.0	1021	17.76	24.07	677	13.90	17.99	507	11.28	14.35	---	13.9	17.9	21.5	24.5	26.5	29.0	32.0	36.6
1.74	9.0	16.0	1003	21.25	27.02	665	16.73	20.40	499	13.56	16.32	---	---	15.4	19.0	22.0	24.1	26.6	29.6	34.1
1.77	10.0	18.0	989	24.44	29.72	656	19.46	22.71	492	15.82	18.23	---	---	---	16.5	19.6	21.6	24.1	27.2	31.7
1.79	11.0	20.0	978	27.30	32.15	648	22.07	24.93	486	18.00	20.09	---	---	---	---	17.0	19.1	21.6	24.7	29.3
1.81	7.0	13.0	966	14.05	20.93	641	10.99	15.52	480	8.95	12.36	10.8	15.5	19.5	23.1	26.1	28.1	30.6	33.6	38.1
1.82	13.0	24.0	961	31.97	36.15	637	26.94	29.05	478	22.18	23.64	---	---	---	---	---	---	---	19.6	24.3
1.82	7.5	14.0	960	15.97	22.56	636	12.47	16.78	477	10.14	13.38	---	14.2	18.3	21.8	24.9	26.9	29.4	32.4	36.9
1.84	8.5	16.0	950	19.59	25.62	630	15.36	19.23	472	12.46	15.37	---	---	15.8	19.4	22.4	24.4	27.0	30.0	34.5
1.85	16.0	30.0	944	---	---	626	33.27	34.41	469	27.98	28.56	---	---	---	---	---	---	---	---	---
1.86	9.5	18.0	942	22.92	28.44	624	18.14	21.59	468	14.73	17.30	---	---	---	16.8	19.9	22.0	24.5	27.5	32.1
1.87	10.5	20.0	935	25.94	31.01	620	20.80	23.85	465	16.93	19.18	---	---	---	---	17.4	19.4	22.0	25.1	29.6
1.90	14.0	27.0	920	33.75	37.70	610	29.20	30.96	457	24.19	25.35	---	---	---	---	---	---	---	---	20.7
1.95	7.0	14.0	899	14.09	20.97	596	11.02	15.54	447	8.97	12.38	---	14.5	18.6	22.2	25.2	27.2	29.8	32.8	37.3
1.95	8.0	16.0	896	17.85	24.15	594	13.95	18.04	446	11.32	14.40	---	---	16.1	19.7	22.8	24.8	27.3	30.3	34.9
1.96	9.0	18.0	894	21.32	27.10	593	16.78	20.44	444	13.61	16.36	---	---	13.5	17.2	20.3	22.3	24.8	27.9	32.4
1.96	10.0	20.0	892	24.60	29.79	591	19.50	22.75	444	15.85	18.26	---	---	---	---	17.7	19.8	22.3	25.4	30.0
1.97	12.0	24.0	889	29.87	34.35	590	24.60	27.07	442	20.15	21.92	---	---	---	---	---	---	---	20.3	25.0
2.04	13.0	27.0	856	32.03	36.21	567	26.98	29.09	425	22.21	23.67	---	---	---	---	---	---	---	---	21.4
2.06	9.5	20.0	849	22.97	28.50	563	18.17	21.63	422	14.75	17.33	---	---	---	14.9	18.0	20.1	22.7	25.8	30.3
2.07	8.5	18.0	846	19.65	25.68	561	15.40	19.27	421	12.49	15.39	---	---	13.8	17.5	20.6	22.6	25.2	28.2	32.8
2.08	7.5	16.0	843	16.03	22.62	559	12.52	16.82	419	10.17	13.41	---	12.3	16.5	20.1	23.1	25.1	27.7	30.7	35.2
2.11	14.0	30.0	829	33.80	37.74	549	29.24	30.99	412	24.22	25.37	---	---	---	---	---	---	---	---	---
2.14	11.0	24.0	818	27.39	32.24	542	22.13	24.99	406	18.05	20.13	---	---	---	---	---	---	17.8	21.0	25.7
2.17	9.0	20.0	806	21.37	27.14	535	16.81	20.47	401	13.64	16.38	---	---	---	15.2	18.4	20.4	23.0	26.1	30.7
2.19	8.0	18.0	799	17.89	24.20	530	13.98	18.07	397	11.34	14.42	---	---	14.2	17.8	20.9	23.0	25.6	28.6	33.2
2.21	12.0	27.0	792	29.91	34.39	525	24.63	27.10	394	20.17	21.94	---	---	---	---	---	---	---	---	22.1
2.22	7.0	16.0	790	14.14	21.03	523	11.05	15.58	393	9.00	12.41	---	12.6	16.8	20.4	23.5	25.5	28.0	31.1	35.6
2.22	16.0	36.0	788	---	---	523	33.33	34.46	392	28.02	28.59	---	---	---	---	---	---	---	---	---
2.24	10.5	24.0	782	26.02	31.08	518	20.85	23.90	389	16.97	19.22	---	---	---	---	---	---	18.1	21.3	26.0
2.27	13.0	30.0	771	32.07	36.24	511	27.01	29.11	383	2223	23.69	---	---	---	---	---	---	---	---	---
ARC-LENGTH CORRECTION FACTOR —>												**0.74**	**0.78**	**0.81**	**0.83**	**0.85**	**0.86**	**0.88**	**0.89**	**0.91**

NOTE: Selection program VIA-VISA available at www.ptwizard.com.

DODGE®

C	S-L CLASSIC	CX	CLASSIC COG

STOCK DRIVE SELECTIONS

Ratio	Belt Size/Center Distance																	
	C112 CX112	C120 CX120	C128 CX128	C136 CX136	C144 CX144	C158 CX158	C162 CX162	C173 CX173	C180 CX180	C195 CX195	C210 CX210	C240 CX240	C270 CX270	C300 CX300	C330 CX330	C360 CX360	C390 CX390	C420 CX420
1.38	38.6	42.6	46.6	50.6	54.6	61.6	63.6	69.1	72.6	80.1	87.6	101.6	116.6	131.6	146.6	161.6	176.6	191.6
1.39	41.3	45.3	49.3	53.3	57.3	64.3	66.3	71.8	75.3	82.8	90.3	104.3	119.3	134.3	149.3	164.3	179.3	194.3
1.41	44.1	48.1	52.1	56.1	60.1	67.1	69.1	74.6	78.1	85.6	93.1	107.1	122.1	137.1	152.1	167.1	182.1	197.1
1.42	30.6	34.6	38.6	42.7	46.7	53.7	55.7	61.2	64.7	72.2	79.7	93.7	108.7	123.7	138.7	153.7	168.7	183.7
1.43	40.1	44.1	48.1	52.1	56.1	63.1	65.1	70.7	74.2	81.7	89.2	103.2	118.2	133.2	148.2	163.2	178.2	193.2
1.44	36.2	40.2	44.2	48.2	52.2	59.2	61.2	66.7	70.2	77.7	85.2	99.2	114.2	129.2	144.2	159.2	174.2	189.2
1.44	42.9	46.9	50.9	54.9	58.9	65.9	67.9	73.4	76.9	84.4	91.9	105.9	120.9	135.9	150.9	165.9	180.9	195.9
1.45	38.9	42.9	46.9	51.0	55.0	62.0	64.0	69.5	73.0	80.5	88.0	102.0	117.0	132.0	147.0	162.0	177.0	192.0
1.47	43.7	47.7	51.7	56.7	59.7	66.7	68.7	74.2	77.7	85.2	92.7	106.7	121.7	136.7	151.7	166.7	181.7	196.7
1.48	41.7	45.7	49.7	53.7	57.7	64.7	66.7	72.2	75.7	83.2	90.7	104.7	119.7	134.7	149.7	164.7	179.7	194.7
1.48	33.8	37.8	41.8	45.8	49.8	56.8	58.8	64.3	67.8	75.3	82.8	96.9	111.9	126.9	141.9	156.9	171.9	185.9
1.49	25.7	29.8	33.8	37.8	41.9	48.9	50.9	56.4	59.9	67.4	74.9	89.0	104.0	119.0	134.0	149.0	164.0	179.0
1.50	36.5	40.6	44.6	48.6	52.6	59.6	61.6	67.1	70.6	78.1	85.6	99.6	114.6	129.6	144.6	159.6	174.6	189.6
1.51	40.5	44.5	48.5	52.5	56.5	63.5	65.5	71.0	74.5	82.0	89.5	103.5	118.6	133.6	148.6	163.6	178.6	193.6
1.52	31.3	35.4	39.4	43.4	47.4	54.4	56.4	61.9	65.5	73.0	80.5	94.5	109.5	124.5	139.5	154.5	169.5	184.5
1.53	39.3	43.3	47.3	51.3	55.3	62.3	64.3	69.9	73.4	80.9	88.4	102.4	117.4	132.4	147.4	162.4	177.4	192.4
1.54	43.3	47.3	51.3	58.3	59.3	56.3	68.3	73.8	77.3	84.8	92.3	106.3	121.3	136.3	151.3	166.3	181.3	196.3
1.57	42.1	46.1	50.1	54.1	58.1	65.1	67.1	72.6	76.1	83.6	91.1	105.1	120.1	135.1	150.1	165.1	180.1	195.1
1.58	36.9	40.9	44.9	48.9	53.0	60.0	62.0	67.5	71.0	78.5	86.0	100.0	115.0	130.0	145.0	160.0	175.0	190.0
1.60	40.9	44.9	48.9	52.9	56.9	63.9	65.9	71.4	74.9	82.4	89.9	103.9	118.9	133.9	148.9	163.9	178.9	193.9
1.61	34.5	38.5	42.5	46.6	50.6	57.6	59.6	65.1	68.6	76.1	83.6	97.6	112.6	127.6	142.6	157.6	172.6	187.7
1.62	39.7	43.7	47.7	51.7	55.7	62.7	64.7	70.2	73.7	81.2	88.7	102.8	117.8	132.8	147.8	162.8	177.8	192.8
1.65	32.1	36.1	40.1	44.1	48.2	55.2	57.2	62.7	66.2	73.7	81.2	95.2	110.3	125.3	140.3	155.3	170.3	185.3
1.66	37.3	41.3	45.3	49.3	53.3	60.3	62.3	67.9	71.4	78.9	86.4	100.4	115.4	130.4	145.4	160.4	175.4	190.4
1.67	23.0	27.1	31.2	35.3	39.3	46.4	48.4	53.9	57.4	65.0	72.5	86.5	101.5	116.6	131.6	146.6	161.6	176.6
	0.94	**0.95**	**0.97**	**0.98**	**0.99**	**1.01**	**1.02**	**1.03**	**1.04**	**1.06**	**1.08**	**1.11**	**1.03**	**1.16**	**1.18**	**1.20**	**1.22**	**1.24**
1.66	42.5	46.5	50.5	54.5	58.5	65.5	67.5	73.0	76.5	84.0	91.5	105.5	120.5	135.5	150.5	165.5	180.5	195.5
1.69	34.9	38.9	42.9	46.9	50.9	58.0	60.0	65.5	69.0	76.5	84.0	98.0	113.0	128.0	143.0	158.0	173.0	188.0
1.69	27.2	31.2	35.3	39.3	43.3	50.4	52.4	57.9	61.4	68.9	76.5	90.5	105.5	120.5	135.5	150.5	165.5	180.6
1.70	41.3	45.3	49.3	53.3	57.3	64.3	66.3	71.8	75.3	82.8	90.3	104.3	119.3	134.3	149.3	164.3	179.3	194.3
1.71	40.1	44.1	48.1	52.1	56.1	63.1	65.1	70.6	74.1	81.6	89.1	103.1	118.1	133.1	148.1	163.2	178.2	193.2
1.74	37.7	41.7	45.7	49.7	53.7	60.7	62.7	68.2	71.7	79.2	86.8	100.8	115.8	130.8	145.8	160.8	175.8	190.8
1.77	35.2	39.3	43.3	47.3	51.3	58.3	60.3	65.8	69.4	76.9	84.4	98.4	113.4	128.4	143.4	158.4	173.4	188.4
1.79	32.8	36.8	40.9	44.9	48.9	55.9	57.9	63.5	67.0	74.5	82.0	96.0	111.0	126.0	141.0	156.1	171.1	186.1
1.81	41.6	45.7	49.7	53.7	57.7	64.7	66.7	72.2	75.7	83.2	90.7	104.7	119.7	134.7	149.7	164.7	179.7	194.7
1.82	27.9	31.9	36.0	40.0	44.1	51.1	53.1	58.6	62.2	69.7	77.2	91.2	106.3	121.3	136.3	151.3	166.3	181.3
1.82	40.4	44.5	48.5	52.5	56.5	63.5	65.5	71.0	74.5	82.0	89.5	103.5	118.5	133.5	148.5	163.5	178.5	193.5
1.84	38.0	42.1	46.1	50.1	54.1	61.1	63.1	58.6	72.1	79.6	87.1	101.1	116.2	131.2	146.2	161.2	176.2	191.2
1.85	---	24.3	28.5	32.6	36.7	43.8	45.8	51.4	54.9	62.4	70.0	84.0	99.1	114.1	129.2	144.2	159.2	174.2
1.86	35.6	39.6	43.7	47.7	51.7	58.7	60.7	56.2	69.7	77.2	84.8	98.8	113.8	128.8	143.8	158.8	173.8	188.8
1.87	33.2	37.2	41.2	45.3	49.3	56.3	58.3	63.8	67.3	74.9	82.4	96.4	111.4	126.4	141.4	156.4	171.4	186.4
1.90	24.4	28.5	32.6	36.7	40.7	47.8	49.8	55.4	58.9	66.4	74.0	88.0	103.1	118.1	133.1	148.1	163.1	178.1
1.95	40.8	44.8	48.8	52.8	56.9	63.9	65.9	71.4	74.9	82.4	89.9	103.9	118.9	133.9	148.9	163.9	178.9	193.9
1.95	38.4	42.4	46.4	50.5	54.5	61.5	63.5	69.0	72.5	80.0	87.5	101.5	116.5	131.5	146.6	161.6	176.6	191.6
1.96	36.0	40.0	44.0	48.0	52.1	59.1	61.1	66.6	70.1	77.6	85.1	99.2	114.2	129.2	144.2	159.2	174.2	189.2
1.96	33.5	37.6	41.6	45.6	49.6	56.7	58.7	64.2	67.7	75.2	82.7	96.8	111.8	126.8	141.8	156.8	171.8	186.8
1.97	28.6	32.6	36.7	40.7	44.8	51.8	53.9	59.4	62.9	70.4	78.0	92.0	107.0	122.0	137.1	152.1	167.1	182.1
2.04	25.1	29.2	33.3	37.4	41.5	48.5	50.6	56.1	59.6	67.2	74.7	88.8	103.8	118.8	133.9	148.9	163.9	178.9
2.06	32.9	37.9	42.0	46.0	50.0	57.1	59.1	64.6	68.1	75.6	83.1	97.2	112.2	127.2	142.2	157.2	172.2	187.2
2.07	36.3	40.4	44.4	48.4	52.4	59.5	61.5	67.0	70.5	78.0	85.5	99.5	114.5	129.6	144.6	159.6	174.6	189.6
2.06	38.8	42.8	46.8	50.8	54.8	61.9	63.9	69.4	72.9	80.4	87.9	101.9	116.9	131.9	146.9	161.9	177.0	192.0
2.11	---	25.7	29.8	34.0	38.1	45.2	47.2	52.8	56.3	63.9	71.5	85.5	100.6	115.6	130.7	145.7	160.7	175.7
2.14	29.3	33.3	37.4	41.5	45.5	52.6	54.6	60.1	63.6	71.2	78.7	92.7	107.8	122.8	137.8	152.8	167.8	182.9
2.17	34.2	38.3	42.3	46.4	50.4	57.4	59.4	65.0	68.5	76.0	83.5	97.5	112.6	127.6	142.6	157.6	172.6	187.6
2.19	36.7	40.7	44.8	48.8	52.8	59.8	61.8	67.4	70.9	78.4	85.9	99.9	114.9	129.9	145.0	160.0	175.0	190.0
2.21	25.7	29.9	34.0	38.1	42.2	49.3	51.3	56.8	60.4	67.9	75.5	89.5	104.6	119.6	134.6	149.6	164.7	179.7
2.22	39.1	43.2	47.2	51.2	55.2	62.2	64.2	69.7	73.3	80.8	88.3	102.3	117.3	132.3	147.3	162.3	177.3	192.3
2.22	---	---	---	26.8	31.0	38.3	40.4	46.0	49.6	57.3	64.9	79.0	94.1	109.2	124.2	139.3	154.3	169.3
2.24	29.6	33.7	37.8	41.8	45.9	52.9	56.0	60.5	64.0	71.5	79.1	93.1	108.2	123.2	138.2	153.2	168.2	183.2
2.27	22.1	26.3	30.5	34.7	38.8	45.9	47.9	53.5	57.1	64.6	72.2	86.3	101.3	116.4	131.4	146.4	161.5	176.5
	0.93	**0.95**	**0.96**	**0.97**	**0.99**	**1.01**	**1.02**	**1.03**	**1.04**	**1.06**	**1.08**	**1.10**	**1.13**	**1.16**	**1.18**	**1.20**	**1.22**	**1.23**

NOTE: Selection program VIA-VISA available at www.ptwizard.com.

SELECTION

DODGE®

C	S-L CLASSIC	CX	CLASSIC COG

STOCK DRIVE SELECTIONS

Ratio	Stock Shv. Datum Diam.		1750 RPM Driver			1160 RPM Driver			870 RPM Driver			Belt Size/Center Distance								
			Driven	HP Per Belt		Driven	HP Per Belt		Driven	HP Per Belt		C51	C60	C68	C75	C81	C85	C90	C96	C105
	Driver	Driven	RPM	C	CX	RPM	C	CX	RPM	C	CX	CX51	CX60	CX68	CX75	CX81	CX85	CX90	CX96	CX105
2.29	8.5	20.0	763	19.68	25.71	506	15.42	19.29	380	12.50	15.41	---	---	---	15.5	18.7	20.8	23.4	26.5	31.0
2.33	7.5	18.0	751	16.07	22.66	498	12.54	16.85	374	10.19	13.43	---	---	14.5	18.2	21.3	23.3	25.9	29.0	33.5
2.35	10.0	24.0	746	24.56	29.85	494	19.54	22.79	371	15.88	18.29	---	---	---	---	---	---	18.4	21.6	26.3
2.40	11.0	27.0	728	27.42	32.28	483	22.16	25.01	362	18.06	20.15	---	---	---	---	---	---	---	---	22.7
2.43	8.0	20.0	721	17.92	24.23	478	14.00	18.09	358	11.36	14.43	---	---	---	15.8	19.0	21.1	23.7	26.8	31.4
2.45	12.0	30.0	714	29.94	34.42	473	24.65	27.12	355	20.18	21.95	---	---	---	---	---	---	---	---	---
2.48	9.5	24.0	710	23.03	28.55	471	18.20	21.66	353	14.78	17.35	---	---	---	---	---	---	18.8	22.0	26.7
2.49	7.0	18.0	704	14.17	21.05	467	11.07	15.60	350	9.01	12.42	---	---	14.8	18.5	21.6	23.7	26.2	29.3	33.9
2.51	10.5	27.0	696	26.05	31.11	461	20.87	23.92	346	16.99	19.23	---	---	---	---	---	---	---	---	23.0
2.53	14.0	36.0	692	33.85	37.79	459	29.27	31.03	344	24.24	25.39	---	---	---	---	---	---	---	---	---
2.58	7.5	20.0	678	16.09	22.68	449	12.56	16.86	337	10.20	13.44	---	---	---	16.2	19.4	21.5	24.1	27.1	31.7
2.60	9.0	24.0	674	21.41	27.18	447	16.84	20.50	335	13.66	16.40	---	---	---	---	---	---	19.1	22.3	27.0
2.63	10.0	27.0	664	24.59	29.87	440	19.56	22.81	330	15.89	18.31	---	---	---	---	---	---	---	---	23.4
2.67	11.0	30.0	656	27.44	32.30	435	22.17	25.02	326	18.07	20.16	---	---	---	---	---	---	---	---	---
2.71	16.0	44.0	646	---	---	428	33.36	34.49	321	28.05	28.62	---	---	---	---	---	---	---	---	---
2.72	13.0	36.0	644	32.10	36.28	427	27.03	29.14	320	22.25	23.71	---	---	---	---	---	---	---	---	---
2.74	8.5	24.0	638	19.72	25.75	423	15.44	19.32	317	12.52	15.43	---	---	---	---	---	16.6	19.4	22.6	27.3
2.76	7.0	20.0	635	14.19	21.07	421	11.09	15.61	316	9.02	12.43	---	---	---	16.5	19.7	21.8	24.4	27.5	32.1
2.77	9.5	27.0	632	23.05	28.57	419	18.22	21.67	314	14.79	17.36	---	---	---	---	---	---	---	18.8	23.7
2.79	10.5	30.0	627	26.06	31.13	416	20.88	23.93	312	16.99	19.24	---	---	---	---	---	---	---	---	---
2.90	8.0	24.0	602	17.95	24.26	399	14.02	18.11	300	11.37	14.45	---	---	---	---	---	16.9	19.7	22.9	27.7
2.91	9.0	27.0	600	21.43	27.20	398	16.85	20.51	298	13.67	16.41	---	---	---	---	---	---	---	19.1	24.0
2.92	10.0	30.0	599	24.60	29.89	397	19.57	22.82	298	15.90	18.31	---	---	---	---	---	---	---	---	20.1
2.94	12.0	36.0	596	29.97	34.45	395	24.67	27.14	296	20.20	21.97	---	---	---	---	---	---	---	---	---
3.07	9.5	30.0	570	23.06	28.58	378	18.23	21.68	283	14.79	17.37	---	---	---	---	---	---	---	---	20.4
ARC-LENGTH CORRECTION FACTOR —>												**---**	**---**	**0.76**	**0.79**	**0.82**	**0.83**	**0.85**	**0.87**	**0.89**
3.08	8.5	27.0	568	19.73	25.77	377	15.45	19.33	283	12.53	15.44	---	---	---	---	---	---	---	19.4	24.3
3.08	14.0	44.0	568	33.88	37.82	376	29.29	31.05	282	24.25	25.41	---	---	---	---	---	---	---	---	---
3.09	7.5	24.0	567	16.11	22.70	376	12.57	16.88	282	10.21	13.45	---	---	---	---	---	17.2	20.0	23.3	28.0
3.19	11.0	36.0	648	27.47	32.32	363	22.18	25.04	272	18.08	20.17	---	---	---	---	---	---	---	---	---
3.23	9.0	30.0	541	21.44	27.21	359	16.86	20.52	269	13.67	16.41	---	---	---	---	---	---	---	---	20.7
3.26	8.0	27.0	536	17.96	24.27	356	14.03	18.12	267	11.38	14.45	---	---	---	---	---	---	---	19.7	24.6
3.30	7.0	24.0	531	14.21	21.09	352	11.10	15.62	264	9.03	12.44	---	---	---	---	---	17.6	20.3	23.6	28.3
3.31	13.0	44.0	528	32.13	36.30	350	27.05	29.15	263	22.26	23.72	---	---	---	---	---	---	---	---	---
3.34	10.5	36.0	524	26.08	31.15	347	20.90	23.95	261	17.00	19.25	---	---	---	---	---	---	---	---	---
3.42	8.5	30.0	512	19.74	25.77	340	15.46	19.33	255	12.53	15.44	---	---	---	---	---	---	---	---	21.0
3.47	7.5	27.0	505	16.12	22.71	334	12.58	16.88	251	10.21	13.46	---	---	---	---	---	---	---	20.0	25.0
3.50	10.0	36.0	500	24.62	29.90	331	19.58	22.83	249	15.91	18.32	---	---	---	---	---	---	---	---	---
3.58	12.0	44.0	489	29.99	34.47	324	24.68	27.15	243	20.21	21.98	---	---	---	---	---	---	---	---	---
3.62	8.0	30.0	484	17.97	24.28	321	14.04	18.12	240	11.38	14.46	---	---	---	---	---	---	---	---	21.3
3.68	9.5	36.0	476	23.07	28.60	315	18.24	21.69	237	14.80	17.38	---	---	---	---	---	---	---	---	---
3.70	7.0	27.0	473	14.22	21.10	313	11.10	15.63	235	9.04	12.44	---	---	---	---	---	---	---	20.3	25.3
3.85	7.5	30.0	455	16.13	22.72	301	12.58	16.89	226	10.22	13.46	---	---	---	---	---	---	---	---	21.6
3.87	9.0	36.0	452	21.45	27.22	300	16.87	20.53	225	13.68	16.42	---	---	---	---	---	---	---	---	---
3.89	11.0	44.0	449	27.48	32.33	298	22.19	25.05	223	18.09	20.18	---	---	---	---	---	---	---	---	---
4.07	10.5	44.0	430	26.10	31.16	285	20.91	23.95	214	17.01	19.26	---	---	---	---	---	---	---	---	---
ARC-LENGTH CORRECTION FACTOR —>												**---**	**---**	**---**	**---**	**---**	**0.74**	**0.77**	**0.80**	**0.84**
4.09	8.5	36.0	428	19.75	25.79	284	15.47	19.34	213	12.54	15.45	---	---	---	---	---	---	---	---	---
4.11	7.0	30.0	426	14.22	21.11	282	11.11	15.63	212	9.04	12.45	---	---	---	---	---	---	---	---	21.9
4.27	10.0	44.0	410	24.63	29.92	272	19.59	22.84	204	15.92	18.33	---	---	---	---	---	---	---	---	---
4.33	8.0	36.0	404	17.98	24.29	268	14.04	18.13	201	11.39	14.46	---	---	---	---	---	---	---	---	---
4.48	9.5	44.0	390	23.08	28.61	259	18.24	21.70	194	14.81	17.38	---	---	---	---	---	---	---	---	---
4.61	7.5	36.0	380	16.14	22.73	252	12.59	16.90	189	10.22	13.46	---	---	---	---	---	---	---	---	---
4.72	9.0	44.0	370	21.46	27.23	246	16.87	20.53	184	13.68	16.42	---	---	---	---	---	---	---	---	---
4.92	7.0	36.0	356	14.23	21.11	236	11.11	15.64	177	9.04	12.45	---	---	---	---	---	---	---	---	---
4.99	8.5	44.0	351	19.76	25.79	233	15.47	19.35	174	12.54	15.45	---	---	---	---	---	---	---	---	---
5.29	8.0	44.0	331	17.99	24.29	219	14.05	18.13	165	11.39	14.47	---	---	---	---	---	---	---	---	---
5.62	7.5	44.0	311	16.15	22.74	206	12.59	16.90	155	10.23	13.47	---	---	---	---	---	---	---	---	---
6.00	7.0	44.0	292	14.24	21.12	193	11.12	15.64	145	9.04	12.45	---	---	---	---	---	---	---	---	---
ARC-LENGTH CORRECTION FACTOR —>												**---**	**---**	**---**	**---**	**---**	**---**	**---**	**---**	**0.79**

NOTE: Selection program VIA-VISA available at www.ptwizard.com.

DODGE®

C	S-L CLASSIC	CX	CLASSIC COG

STOCK DRIVE SELECTIONS

Ratio	Belt Size/Center Distance																	
	C112 CX112	C120 CX120	C128 CX128	C136 CX136	C144 CX144	C158 CX158	C162 CX162	C173 CX173	C180 CX180	C195 CX195	C210 CX210	C240 CX240	C270 CX270	C300 CX300	C330 CX330	C360 CX360	C390 CX390	C420 CX420
2.29	34.6	38.6	42.7	46.7	50.8	57.8	59.8	65.3	68.8	76.4	83.9	97.9	112.9	127.9	143.0	158.0	173.0	188.0
2.33	37.1	41.1	45.1	49.2	53.2	60.2	62.2	67.7	71.2	78.8	86.3	100.3	115.3	130.3	145.3	160.3	175.4	190.4
2.35	29.9	34.0	38.1	42.2	46.2	53.3	55.3	60.9	64.4	71.9	79.5	93.5	108.5	123.6	138.6	153.6	168.6	183.6
2.40	26.4	30.6	34.7	38.8	42.9	50.0	52.0	57.6	61.1	68.7	76.2	90.3	105.3	120.4	135.4	150.4	165.4	180.4
2.43	35.0	39.0	43.1	47.1	51.1	58.2	60.2	65.7	69.2	76.7	84.3	98.3	113.3	128.3	143.3	158.4	173.4	188.4
2.45	22.7	27.0	31.2	35.3	39.5	46.6	48.6	54.2	57.8	65.4	72.9	87.0	102.1	117.1	132.2	147.2	162.2	177.3
2.48	30.3	34.4	38.5	42.5	46.6	53.7	55.7	61.2	64.7	72.3	79.8	93.9	108.9	123.9	139.0	154.0	169.0	184.0
2.49	37.4	41.5	45.5	49.5	53.5	60.6	62.6	68.1	71.6	79.1	86.7	100.7	115.7	130.7	145.7	160.7	175.7	190.7
2.51	26.7	30.9	35.0	39.1	43.2	50.3	52.4	57.9	61.5	69.0	76.6	90.6	105.7	120.7	135.8	150.8	165.8	180.8
2.53	---	---	---	28.0	32.3	39.7	41.8	47.4	51.0	58.7	66.3	80.4	95.6	110.7	125.7	140.8	155.8	170.8
2.58	35.3	39.4	43.4	47.5	51.5	58.5	60.5	66.1	69.6	77.1	84.6	98.7	113.7	128.7	143.7	158.7	173.8	188.8
2.60	30.6	34.7	38.8	42.9	46.9	54.0	56.0	61.6	65.1	72.7	80.2	94.2	109.3	124.3	139.3	154.4	169.4	184.4
2.63	27.1	31.2	35.4	39.5	43.6	50.7	52.7	58.3	61.8	69.4	76.9	91.0	106.1	121.1	136.1	151.2	166.2	181.2
2.67	23.3	27.6	31.8	36.0	40.1	47.3	49.4	54.9	58.5	66.1	73.7	87.8	102.8	117.9	132.9	148.0	163.0	178.0
2.71	---	---	---	---	---	30.1	32.3	38.3	42.0	49.9	57.7	72.0	87.2	102.4	117.5	132.6	147.7	162.7
2.72	---	---	---	28.7	33.0	40.3	42.4	48.1	51.7	59.4	67.0	81.2	96.3	111.4	126.5	141.5	156.6	171.6
2.74	31.0	35.1	39.2	43.2	47.3	54.4	56.4	62.0	65.5	73.0	80.6	94.6	109.7	124.7	139.7	154.7	169.8	184.8
2.76	35.7	39.7	43.8	47.8	51.8	58.9	60.9	66.4	70.0	77.5	85.0	99.0	114.1	129.1	144.1	159.1	174.1	189.1
2.77	27.4	31.6	35.7	39.8	43.9	51.0	53.1	58.6	62.2	69.7	77.3	91.4	106.4	121.5	136.5	151.5	166.6	181.6
2.79	23.6	28.0	32.2	36.3	40.5	47.7	49.7	55.3	58.8	66.4	74.0	88.1	103.2	118.3	133.3	148.3	163.4	178.4
2.90	31.3	35.4	39.5	43.6	47.7	54.7	56.8	62.3	65.8	73.4	80.9	95.0	110.0	125.1	140.1	155.1	170.1	185.2
2.91	27.7	31.9	36.1	40.2	44.3	51.4	53.4	59.0	62.5	70.1	77.7	91.7	106.8	121.9	136.9	151.9	166.9	182.0
2.92	24.0	28.3	32.5	36.7	40.8	48.0	50.1	55.7	59.2	66.8	74.4	88.5	103.6	118.6	133.7	148.7	163.7	178.8
2.94	---	---	24.9	29.3	33.6	41.0	43.1	48.8	52.4	60.1	67.7	81.9	97.0	112.1	127.2	142.3	157.3	172.4
3.07	24.3	28.6	32.8	37.0	41.2	48.4	50.4	56.0	59.6	67.2	74.7	88.9	103.9	119.0	134.1	149.1	164.1	179.1
	0.91	**0.93**	**0.94**	**0.95**	**0.97**	**1.00**	**1.01**	**1.02**	**1.03**	**1.05**	**1.07**	**1.10**	**1.12**	**1.15**	**1.17**	**1.19**	**1.21**	**1.23**
3.08	28.1	32.3	36.4	40.5	44.6	51.8	53.8	59.4	62.9	70.5	78.0	92.1	107.2	122.2	137.3	152.3	167.3	182.3
3.08	---	---	---	---	---	31.3	33.6	39.6	43.3	51.2	59.0	73.4	88.7	103.8	119.0	134.1	149.2	164.2
3.09	31.6	35.8	39.9	43.9	48.0	55.1	57.1	62.7	66.2	73.8	81.3	95.4	110.4	125.5	140.5	155.5	170.5	185.5
3.19	---	---	25.5	29.9	34.3	41.7	43.8	49.5	53.1	60.8	68.4	82.6	97.8	112.9	127.9	143.0	158.1	173.1
3.23	24.6	28.9	33.2	37.4	41.5	48.7	50.7	56.4	59.9	67.5	75.1	89.2	104.3	119.4	134.4	149.5	164.5	179.5
3.26	28.4	32.6	36.7	40.9	45.0	52.1	54.1	59.7	63.3	70.8	78.4	92.5	107.6	122.6	137.6	152.7	167.7	182.7
3.30	32.0	36.1	40.2	44.3	48.4	55.5	57.5	63.0	66.6	74.1	81.7	95.7	110.8	125.8	140.9	155.9	170.9	185.9
3.31	---	---	---	---	---	31.9	34.2	40.2	44.0	51.9	59.7	74.1	89.4	104.6	119.7	134.8	149.9	165.0
3.34	---	---	25.8	30.3	34.6	42.0	44.1	49.8	53.4	61.1	68.8	83.0	98.1	113.2	128.3	143.4	158.4	173.5
3.42	24.9	29.3	33.5	37.7	41.8	49.0	51.1	56.7	60.3	67.9	75.5	89.6	104.7	119.7	134.8	149.8	164.9	179.9
3.47	28.7	32.9	37.1	41.2	45.3	52.5	54.5	60.1	63.6	71.2	78.8	92.9	107.9	123.0	138.0	153.1	168.1	183.1
3.50	---	---	26.1	30.6	34.9	42.3	44.4	50.2	53.8	61.5	69.1	83.3	98.5	113.6	128.7	143.8	158.8	173.9
3.58	---	---	---	---	---	32.6	34.8	40.9	44.6	52.6	60.4	74.8	90.1	105.3	120.4	135.5	150.6	165.7
3.62	25.2	29.6	33.8	38.0	42.2	49.4	51.4	57.1	60.6	68.2	75.8	89.9	105.0	120.1	135.2	150.2	165.3	180.3
3.68	---	---	26.4	30.9	35.2	42.7	44.8	50.5	54.1	61.8	69.5	83.7	98.8	114.0	129.1	144.1	159.2	174.2
3.70	29.0	33.3	37.4	41.6	45.7	52.8	54.8	60.4	64.0	71.6	79.1	93.2	108.3	123.4	138.4	153.4	168.5	183.5
3.85	25.5	29.9	34.2	38.4	42.5	49.7	51.8	57.4	61.0	68.6	76.2	90.3	105.4	120.5	135.5	150.6	165.6	180.7
3.87	---	---	26.7	31.2	35.6	43.0	45.1	50.8	54.5	62.2	69.8	84.0	99.2	114.3	129.4	144.5	159.6	174.6
3.89	---	---	---	---	---	33.2	35.4	41.5	45.3	53.2	61.0	75.5	90.8	106.0	121.2	136.3	151.4	166.5
4.07	---	---	---	---	---	33.5	35.7	41.8	45.6	53.5	61.4	75.8	91.1	106.3	121.5	136.6	151.7	166.8
	0.86	**0.89**	**0.91**	**0.93**	**0.95**	**0.97**	**0.98**	**1.00**	**1.01**	**1.03**	**1.05**	**1.08**	**1.11**	**1.14**	**1.16**	**1.19**	**1.20**	**1.22**
4.09	---	22.3	27.0	31.5	35.9	43.3	45.4	51.2	54.8	62.5	70.2	84.4	99.6	114.7	129.8	144.9	159.9	175.0
4.11	25.8	30.2	34.5	38.7	42.9	50.1	52.1	57.8	61.3	68.9	76.5	90.7	105.8	120.9	135.9	151.0	166.0	181.0
4.27	---	---	---	---	---	33.8	36.1	42.1	45.9	53.9	61.7	76.2	91.5	106.7	121.9	137.0	152.1	167.2
4.33	---	22.6	27.3	31.8	36.2	43.7	45.8	51.5	55.1	62.9	70.5	84.8	99.9	115.1	130.2	145.2	160.3	175.4
4.48	---	---	---	---	---	34.1	36.4	42.4	46.2	54.2	62.1	76.5	91.8	107.1	122.2	137.4	152.5	167.6
4.61	---	22.9	27.6	32.1	36.5	44.0	46.1	51.8	55.5	63.2	70.9	85.1	100.3	115.4	130.5	145.6	160.7	175.7
4.72	---	---	---	---	---	34.4	36.7	42.8	46.6	54.5	62.4	76.9	92.2	107.4	122.6	137.7	152.8	167.9
4.92	--	23.2	27.9	32.5	36.8	44.3	46.4	52.2	55.8	63.5	71.2	85.5	100.7	115.8	130.9	146.0	161.0	176.1
4.99	---	---	---	---	---	34.7	37.0	43.1	46.9	54.9	62.7	77.2	92.5	107.8	123.0	138.1	153.2	168.3
5.29	---	---	---	---	26.5	35.0	37.3	43.4	47.2	55.2	63.1	77.5	92.9	108.1	123.3	138.5	153.6	168.7
5.62	---	---	---	---	26.8	35.3	37.6	43.7	47.5	55.5	63.4	77.9	93.2	108.5	123.7	138.8	153.9	169.0
6.00	---	---	---	---	27.1	35.6	37.9	44.0	47.8	55.9	63.7	78.2	93.6	108.8	124.0	139.2	154.3	169.4
	0.82	**0.85**	**0.87**	**0.89**	**0.91**	**0.95**	**0.96**	**0.98**	**0.99**	**1.01**	**1.04**	**1.07**	**1.10**	**1.13**	**1.16**	**1.18**	**1.20**	**1.22**

NOTE: Selection program VIA-VISA available at www.ptwizard.com.

SELECTION

DODGE®

D S-L CLASSIC

STOCK DRIVE SELECTIONS

Ratio	Stock Shv. Datum Diam.		1160 RPM Driver		870 RPM Driver		690 RPM Driver		Belt Size/Center Distance					
			Driven	HP/Belt	Driven	HP/Belt	Driven	HP/Belt						
	Driver	Driven	RPM	D	RPM	D	RPM	D	D120	D128	D144	D158	D162	D173
1.00	12.00	12.00	1160	28.43	870	24.56	690	21.13	42.8	46.8	54.8	61.8	63.8	69.3
1.00	13.00	13.00	1160	32.81	870	28.39	690	24.40	41.2	45.2	53.2	60.2	62.2	67.7
1.00	13.50	13.50	1160	34.92	870	30.26	690	26.02	40.5	44.5	52.5	59.5	61.5	67.0
1.00	14.00	14.00	1160	36.96	870	32.10	690	27.61	39.7	43.7	51.7	58.7	60.7	66.2
1.00	14.50	14.50	1160	38.93	870	33.92	690	29.19	38.9	42.9	50.9	57.9	59.9	65.4
1.00	15.00	15.00	1160	40.84	870	35.70	690	30.75	38.1	42.1	50.1	57.1	59.1	64.6
1.00	15.50	15.50	1160	42.68	870	37.45	690	32.30	37.3	41.3	49.3	56.3	58.3	63.8
1.00	16.00	16.00	1160	44.46	870	39.16	690	33.82	36.5	40.5	48.5	55.5	57.5	63.0
1.00	18.00	18.00	1160	50.84	870	45.70	690	39.74	33.4	37.4	45.4	52.4	54.4	59.9
1.00	22.00	22.00	1160	---	870	57.07	690	50.64	27.1	31.1	39.1	46.1	48.1	53.6
1.03	15.50	16.00	1125	43.34	844	37.94	669	32.69	36.9	40.9	48.9	55.9	57.9	63.4
1.03	15.00	15.50	1124	41.52	843	36.20	669	31.16	37.7	41.7	49.7	56.7	58.7	64.2
1.03	14.50	15.00	1123	39.63	842	34.44	668	29.61	38.5	42.5	50.5	57.5	59.5	65.0
1.03	14.00	14.50	1122	37.67	841	32.64	667	28.04	39.3	43.3	51.3	58.3	60.3	65.8
1.04	13.50	14.00	1120	35.66	840	30.82	666	26.46	40.1	44.1	52.1	59.1	61.1	66.6
1.04	13.00	13.50	1119	33.58	839	28.96	666	24.86	40.8	44.8	52.8	59.8	61.8	67.3
1.06	15.00	16.00	1090	42.09	818	36.64	648	31.50	37.3	41.3	49.3	46.3	58.3	63.8
1.07	14.50	15.50	1088	40.22	816	34.88	647	29.96	38.1	42.1	50.1	57.1	59.1	64.6
1.07	14.00	15.00	1086	38.28	814	33.10	646	28.40	38.9	42.9	50.9	57.9	59.9	65.4
1.07	13.50	14.50	1083	36.28	812	31.28	644	26.83	39.7	43.7	51.7	58.7	60.7	66.2
1.07	13.00	14.00	1081	34.22	810	29.44	643	25.24	40.5	44.5	52.5	59.5	61.5	67.0
1.08	12.00	13.00	1075	29.93	806	25.68	639	22.02	42.0	46.0	54.0	61.0	63.0	68.5
1.10	14.50	16.00	1055	40.72	791	35.26	628	30.26	37.7	41.7	49.7	56.7	58.7	64.2
1.10	14.00	15.50	1052	38.79	789	33.48	626	28.70	38.5	42.5	50.5	57.5	59.5	65.0
1.11	13.50	15.00	1048	36.80	786	31.67	624	27.14	39.3	43.3	51.3	58.3	60.3	65.8
ARC-LENGTH CORRECTION FACTOR —>									**0.86**	**0.87**	**0.90**	**0.92**	**0.92**	**0.93**
1.11	18.00	20.00	1047	52.74	786	47.13	623	40.87	31.8	35.8	43.8	50.8	52.8	58.3
1.11	13.00	14.50	1045	34.85	784	29.84	621	25.55	40.1	44.1	52.1	59.1	61.1	66.6
1.12	12.00	13.50	1037	30.48	777	26.09	617	22.34	41.6	45.6	53.6	60.6	62.6	68.1
1.12	16.00	18.00	1035	46.53	776	40.71	616	35.05	34.9	38.9	46.9	54.0	56.0	61.5
1.14	14.00	16.00	1020	39.22	765	33.80	607	28.96	38.1	42.1	50.1	57.1	59.1	64.6
1.14	13.50	15.50	1016	37.24	762	32.00	604	27.40	38.9	42.9	50.9	57.1	59.9	65.4
1.15	13.00	15.00	1011	35.19	758	30.17	602	25.82	39.7	43.7	51.7	58.7	60.7	66.2
1.16	15.50	18.00	1004	45.15	753	39.30	597	33.76	35.3	39.3	47.3	54.3	56.3	61.2
1.16	12.00	14.00	1001	30.93	751	26.44	595	22.61	41.2	45.2	53.2	60.2	62.2	67.7
1.18	13.50	16.00	985	37.60	739	32.28	586	27.62	38.5	42.5	0.5	57.5	59.5	65.0
1.18	13.00	15.50	980	35.56	735	30.45	583	26.04	39.3	43.3	51.3	58.3	60.3	65.8
1.19	15.00	18.00	973	43.67	730	37.82	579	32.43	35.7	39.7	47.7	54.7	56.7	62.2
1.20	12.00	14.50	968	31.31	726	26.72	576	22.84	40.8	44.8	52.8	59.8	61.8	67.3
1.22	18.00	22.00	955	53.86	716	47.97	568	41.53	30.2	34.2	42.2	49.2	51.2	56.7
1.22	13.00	16.00	950	35.87	713	30.68	565	26.22	38.9	42.9	50.9	57.9	59.9	65.4
1.22	22.00	27.00	950	---	712	59.37	565	52.46	---	27.1	35.1	42.1	44.1	49.6
1.23	14.50	18.00	942	42.08	706	36.27	560	31.06	36.1	40.1	48.1	55.1	57.1	62.6
1.24	12.00	15.00	937	31.62	703	26.95	557	23.02	40.4	44.4	52.4	59.4	61.4	66.9
1.24	16.00	20.00	935	47.67	701	41.57	556	35.73	33.3	37.3	45.3	52.4	54.4	59.9
1.27	14.00	18.00	911	40.38	683	34.67	542	29.65	36.5	40.5	48.5	55.5	57.5	63.0
1.28	12.00	15.50	908	31.88	681	27.15	540	23.18	40.0	44.0	52.0	59.0	61.0	66.5
1.28	15.50	20.00	907	46.14	680	40.04	539	34.36	33.7	37.7	45.7	52.7	54.7	60.2
1.32	12.00	16.00	880	32.10	660	27.31	524	23.31	39.6	43.6	51.6	58.6	60.6	66.1
1.32	13.50	18.00	879	38.59	660	33.02	523	28.20	36.9	40.9	48.9	55.9	57.9	63.4
1.32	15.00	20.00	878	44.52	659	38.46	523	32.94	34.1	38.1	46.1	53.1	55.1	60.6
1.36	16.00	22.00	852	48.33	639	42.07	507	36.12	31.7	35.7	43.7	50.7	52.7	58.2
1.36	14.50	20.00	850	42.81	638	36.83	506	31.50	34.5	38.5	46.5	53.5	55.5	61.0
1.37	13.00	18.00	848	36.71	636	31.31	505	26.72	37.2	41.2	49.3	56.3	58.3	63.8
1.40	15.50	22.00	826	46.72	620	40.47	492	34.69	32.0	36.1	44.1	51.1	53.1	58.6
1.41	14.00	20.00	822	41.01	617	35.15	489	30.03	34.8	38.8	46.9	53.9	55.9	61.4
1.45	15.00	22.00	801	45.02	601	38.83	476	33.24	32.4	36.4	44.5	51.5	53.5	59.0
1.46	13.50	20.00	794	39.13	595	33.42	472	28.52	35.2	39.2	47.2	54.3	56.3	61.8
1.48	12.00	18.00	786	32.68	589	27.75	467	23.66	38.0	42.0	50.0	57.0	59.0	64.5
1.48	18.00	27.00	782	55.12	586	48.91	465	42.28	25.9	30.0	38.1	45.1	47.1	52.6
1.49	22.00	33.00	780	---	585	60.28	464	53.18	---	---	30.0	37.1	39.1	44.6
ARC-LENGTH CORRECTION FACTOR —>									**0.84**	**0.86**	**0.88**	**0.90**	**0.91**	**0.92**

NOTE: Selection program VIA-VISA available at www.ptwizard.com.

DODGE®

D	S-L CLASSIC

STOCK DRIVE SELECTIONS

Ratio	Belt Size/Center Distance																
	D180	D195	D210	D225	D240	D255	D270	D300	D315	D330	D360	D390	D420	D480	D540	D600	D660
1.00	72.8	80.3	87.8	94.1	101.6	109.1	116.6	131.6	139.1	146.6	161.6	176.6	191.6	221.6	251.6	281.6	311.6
1.00	71.2	78.7	86.2	92.5	100.0	107.5	115.0	130.0	137.5	145.0	160.0	175.0	190.0	220.0	250.0	280.0	310.0
1.00	70.5	78.0	85.5	91.7	99.2	106.7	114.2	129.2	136.7	144.2	159.2	174.2	189.2	219.2	249.2	279.2	309.2
1.00	69.7	77.2	84.7	90.9	98.4	105.9	113.4	128.4	135.9	143.4	158.4	173.4	188.4	218.4	248.4	278.4	308.4
1.00	68.9	76.4	83.4	90.1	97.6	105.1	112.6	127.6	135.1	142.6	157.6	172.6	187.6	217.6	247.6	277.6	307.6
1.00	68.1	75.6	83.1	89.4	96.8	104.4	111.9	126.9	134.4	141.8	156.8	171.8	186.9	216.9	246.8	276.9	306.9
1.00	67.3	74.8	82.3	88.6	96.1	103.6	111.1	126.1	133.6	141.1	156.1	171.1	186.1	216.1	246.1	276.1	306.1
1.00	66.5	74.0	81.5	87.8	95.3	102.8	110.3	125.3	132.8	140.3	155.3	170.3	185.3	215.3	245.3	275.3	305.3
1.00	63.4	70.9	78.4	84.6	92.1	99.6	107.1	122.1	129.6	137.1	152.1	167.1	182.1	212.1	242.1	272.1	302.1
1.00	57.1	64.6	72.1	78.4	85.9	93.4	100.9	115.9	123.4	130.9	145.9	160.9	175.9	205.9	235.9	265.9	295.9
1.03	66.9	74.4	81.9	88.2	95.7	103.2	110.7	125.7	133.2	140.7	155.7	170.7	185.7	215.7	245.7	275.7	305.7
1.03	67.7	75.2	82.7	89.0	96.5	104.0	111.5	126.5	134.0	141.5	156.5	171.5	186.5	216.5	246.5	276.5	306.5
1.03	68.5	76.0	83.5	89.7	97.2	104.7	112.2	127.2	134.7	142.2	157.2	172.2	187.2	217.2	247.2	277.2	307.2
1.03	69.3	76.8	84.3	90.5	98.0	105.5	113.0	128.0	135.5	143.0	158.0	173.0	188.0	218.0	248.0	278.0	308.0
1.04	70.1	77.6	85.1	91.3	98.8	106.3	113.8	128.8	136.3	143.8	158.8	173.8	188.8	218.8	248.8	278.8	308.8
1.04	70.8	78.3	85.8	92.1	99.6	107.1	114.6	129.6	137.1	144.6	159.6	174.6	189.6	219.6	249.6	279.6	309.6
1.06	67.3	74.8	82.3	88.6	96.1	103.6	111.1	126.1	133.6	141.1	156.1	171.1	186.1	216.1	246.1	276.1	306.1
1.07	68.1	75.6	83.1	89.3	96.8	104.3	111.8	126.8	134.3	141.8	156.8	171.8	186.8	216.8	246.8	276.8	306.8
1.07	68.9	76.4	83.9	90.1	97.6	105.1	112.6	127.6	135.1	142.6	157.6	172.6	187.6	217.6	247.6	277.6	307.6
1.07	69.7	77.2	84.7	90.9	98.4	105.9	113.4	128.4	135.9	143.4	158.4	173.4	188.4	218.4	248.4	278.4	308.4
1.07	70.5	78.0	85.5	91.5	99.2	106.7	114.2	129.2	136.7	144.2	159.2	174.2	189.2	219.2	249.2	279.2	309.2
1.08	72.0	79.5	87.0	93.3	100.8	108.3	115.8	130.8	138.3	145.8	160.8	175.8	190.8	220.8	250.8	280.8	310.8
1.10	67.7	75.2	82.7	89.0	96.5	104.0	111.5	126.5	134.0	141.5	165.5	171.5	186.5	216.5	246.5	276.5	306.5
1.10	68.5	76.0	83.5	89.7	97.2	104.7	112.2	127.2	134.7	142.2	157.2	172.2	187.2	217.2	247.2	277.2	307.2
1.11	69.3	76.8	84.3	90.5	98.0	105.5	113.0	128.0	135.5	143.0	158.0	173.0	188.0	218.0	248.0	278.0	308.0
	0.94	**0.96**	**0.97**	**0.99**	**1.00**	**1.01**	**1.02**	**1.04**	**1.05**	**1.05**	**1.08**	**1.10**	**1.11**	**1.14**	**1.16**	**1.19**	**1.20**
1.11	61.8	69.3	76.8	83.1	90.6	98.1	105.6	120.6	128.1	135.6	150.6	165.6	180.6	210.6	240.6	270.6	300.6
1.11	70.1	77.6	85.1	91.3	98.8	106.3	113.8	128.8	136.3	143.8	158.8	173.8	188.8	218.8	248.8	278.8	308.8
1.12	71.6	79.1	86.6	92.9	100.4	107.9	115.4	130.4	137.9	145.4	160.4	175.4	190.4	220.4	250.4	280.4	310.4
1.12	65.0	72.5	80.0	86.2	93.7	101.2	108.7	123.7	131.2	138.7	153.7	168.7	183.7	213.7	243.7	273.7	303.7
1.14	68.1	75.6	83.1	89.3	96.8	104.3	111.8	126.8	134.3	141.8	156.8	171.8	186.8	216.8	246.8	246.8	306.8
1.14	68.9	76.4	83.9	90.1	97.6	105.1	112.6	127.6	135.1	142.6	157.6	172.6	187.6	217.6	247.6	277.6	307.6
1.15	69.7	77.2	84.7	90.9	98.4	105.9	113.4	128.4	135.9	143.4	158.4	173.4	188.4	218.4	248.4	278.4	308.4
1.16	65.3	72.8	80.3	86.6	94.1	101.6	109.1	124.1	131.6	139.1	154.1	169.1	184.1	214.1	244.1	274.1	304.1
1.16	71.2	78.7	86.2	92.5	100.0	107.5	115.0	130.0	137.5	145.0	160.0	175.0	190.0	220.0	250.0	280.0	310.0
1.18	68.5	76.0	83.5	89.7	97.2	104.7	112.2	127.2	134.7	142.2	157.2	172.2	187.2	217.2	247.2	277.2	307.2
1.18	69.3	76.8	84.3	90.5	98.0	105.5	113.0	128.0	135.5	143.0	158.0	173.0	188.0	218.0	248.0	278.0	308.0
1.19	65.7	73.2	80.7	87.0	94.5	102.0	109.5	124.5	132.0	139.5	154.5	169.5	184.5	214.5	244.5	274.5	304.5
1.20	70.8	78.3	85.8	92.1	99.6	107.1	114.6	129.6	137.1	144.6	159.6	174.6	189.6	219.6	249.6	279.6	309.6
1.22	60.2	67.7	75.2	81.5	89.0	96.5	104.0	119.0	126.5	134.0	149.0	164.0	179.0	209.0	239.0	269.0	299.0
1.22	68.9	76.4	83.9	90.1	97.6	105.1	112.6	127.6	135.1	142.6	157.6	172.6	187.6	217.6	247.6	277.6	307.6
1.22	53.1	60.6	68.1	74.4	81.9	89.4	96.9	111.9	119.4	126.9	141.9	156.9	171.9	201.9	231.9	261.9	291.9
1.23	66.1	73.6	81.1	87.4	94.9	102.4	109.9	124.9	132.4	139.9	154.9	169.9	184.9	214.9	244.9	274.9	304.9
1.24	70.4	77.9	85.4	91.7	99.2	106.7	114.2	129.2	136.7	144.2	159.2	174.2	189.2	219.2	249.2	279.2	309.2
1.24	63.4	70.9	78.4	84.6	92.1	99.6	107.1	122.1	129.6	137.1	152.1	167.1	182.1	212.1	242.1	272.1	302.1
1.27	66.5	74.0	81.5	87.8	95.3	102.8	110.3	125.3	132.8	140.3	155.3	170.3	185.3	215.3	245.3	275.3	305.3
1.28	70.0	77.5	85.0	91.3	98.8	106.3	113.8	128.8	136.3	143.8	158.8	173.8	188.8	218.8	248.8	278.8	308.8
1.28	63.7	71.2	78.8	85.0	92.5	100.0	107.5	122.5	130.0	137.5	152.5	167.5	182.5	212.5	242.5	272.5	302.5
1.32	69.6	77.1	84.6	90.9	98.4	105.9	113.4	128.4	135.9	143.4	158.4	173.4	188.4	218.4	248.4	278.4	308.4
1.32	66.9	74.4	81.9	88.1	95.6	103.1	110.6	125.7	133.2	140.7	155.7	170.7	185.7	215.7	245.7	275.7	305.7
1.32	64.1	71.6	79.1	85.4	92.9	100.4	107.9	122.9	130.4	137.9	152.9	167.9	182.9	212.9	242.9	272.9	302.9
1.36	61.7	69.3	76.8	83.0	90.5	98.0	105.5	120.5	128.0	135.5	150.5	165.5	180.5	210.5	240.6	270.6	300.6
1.36	64.5	72.0	79.5	85.8	93.3	100.8	108.3	123.3	130.8	138.3	153.3	168.3	183.3	213.3	243.3	273.3	303.3
1.37	67.3	74.8	82.3	88.5	96.0	103.5	111.0	126.0	133.5	141.0	156.0	171.0	186.0	216.1	246.1	276.1	306.1
1.40	62.1	69.6	77.1	83.4	90.9	98.4	105.9	120.9	128.4	135.9	150.9	165.9	180.9	210.9	240.9	270.9	300.9
1.41	64.9	72.4	79.9	86.2	93.7	101.2	108.7	123.7	131.2	138.7	153.7	168.7	183.7	213.7	243.7	273.7	303.7
1.45	62.5	70.0	77.5	83.8	91.3	98.8	106.3	121.3	128.8	136.3	151.3	166.3	181.3	211.3	241.3	271.3	301.3
1.46	65.3	72.8	80.3	86.5	94.0	101.6	109.1	124.1	131.6	139.1	154.1	169.1	184.1	214.1	244.1	274.1	304.1
1.48	68.0	75.5	83.0	89.3	96.8	104.3	111.8	126.8	134.3	141.8	156.8	171.8	186.8	216.8	246.8	276.8	306.8
1.48	56.1	63.7	71.2	77.4	85.0	92.5	100.0	115.0	122.5	130.0	145.0	160.0	175.0	205.0	235.0	265.0	295.0
1.49	48.2	55.7	63.2	69.5	77.0	84.5	92.1	107.1	114.6	122.1	137.1	152.1	167.1	197.1	227.2	257.2	287.2
	0.93	**0.95**	**0.97**	**0.98**	**0.99**	**1.00**	**1.02**	**1.04**	**1.05**	**1.06**	**1.08**	**1.09**	**1.11**	**1.14**	**1.16**	**1.18**	**1.19**

NOTE: Selection program VIA-VISA available at www.ptwizard.com.

SELECTION

DODGE®

D S-L CLASSIC

STOCK DRIVE SELECTIONS

Ratio	Stock Shv. Datum Diam.		1160 RPM Driver		870 RPM Driver		690 RPM Driver		Belt Size/Center Distance					
			Driven	HP/Belt	Driven	HP/Belt	Driven	HP/Belt						
	Driver	Driven	RPM	D	RPM	D	RPM	D	D120	D128	D144	D158	D162	D173
1.50	14.50	22.00	775	43.24	581	37.14	461	31.75	32.8	36.8	44.8	51.9	53.9	59.4
1.51	13.00	20.00	766	37.16	574	31.65	456	26.99	35.6	39.6	47.6	54.6	56.6	62.1
1.55	14.00	22.00	749	41.38	562	35.42	446	30.24	33.1	37.2	45.2	52.2	54.2	59.8
1.60	13.50	22.00	724	39.44	543	33.65	430	28.71	33.5	37.5	45.6	52.6	54.6	60.1
1.63	12.00	20.00	710	33.00	532	27.99	422	23.85	36.3	40.3	48.4	55.4	57.4	62.9
ARC-LENGTH CORRECTION FACTOR —>									**0.84**	**0.85**	**0.88**	**0.90**	**0.91**	**0.92**
1.66	13.00	22.00	698	37.43	524	31.85	415	27.15	33.9	37.9	46.0	53.0	55.0	60.5
1.66	16.00	27.00	698	49.07	523	42.62	415	36.57	27.3	31.4	39.5	46.6	48.6	54.1
1.71	15.50	27.00	677	47.37	507	40.96	403	35.08	27.7	31.8	39.9	46.9	48.9	54.5
1.77	15.00	27.00	656	45.58	492	39.25	390	33.57	28.0	32.1	40.2	47.3	49.3	54.9
1.79	12.00	22.00	647	33.19	485	28.13	385	23.96	34.6	38.6	46.7	53.7	55.7	61.3
1.80	22.00	40.00	646	---	484	60.65	384	53.47	---	---	---	---	32.7	38.4
1.81	18.00	33.00	642	55.62	482	49.29	382	42.58	---	---	32.8	39.9	41.9	47.5
1.83	14.50	27.00	635	43.73	476	37.51	378	32.04	28.4	32.5	40.6	47.7	49.7	55.2
1.89	14.00	27.00	614	41.80	460	35.74	365	30.49	28.7	32.8	40.9	48.0	50.0	55.6
1.96	13.50	27.00	593	39.80	444	33.93	353	28.92	29.1	33.2	41.3	48.4	50.4	56.0
2.02	16.00	33.00	573	49.38	430	42.86	341	36.75	---	25.8	34.1	41.3	43.4	48.9
2.03	13.00	27.00	572	37.74	429	32.09	340	27.34	29.4	33.5	41.7	48.7	50.8	56.3
2.09	15.50	33.00	556	47.64	417	41.16	331	35.24	---	26.1	34.5	41.7	43.7	49.3
2.15	22.00	48.00	539	---	405	60.81	321	53.60	---	---	---	---	---	---
2.15	15.00	33.00	539	45.82	404	39.43	320	33.72	---	26.4	34.8	42.0	44.1	49.7
2.18	18.00	40.00	531	55.84	399	49.45	316	42.71	---	---	---	33.3	35.4	41.1
2.19	12.00	27.00	530	33.43	397	28.31	315	24.10	30.1	34.2	42.4	49.5	51.5	57.0
2.23	14.50	33.00	521	43.94	391	37.67	310	32.17	---	26.8	35.1	42.4	44.4	50.0
2.30	14.00	33.00	504	41.99	378	35.88	300	30.61	---	27.1	35.5	42.7	44.7	50.4
2.38	13.50	33.00	487	39.97	365	34.05	290	29.02	---	27.4	35.8	43.0	45.1	50.7
ARC-LENGTH CORRECTION FACTOR —>									**0.80**	**0.82**	**0.86**	**0.88**	**0.89**	**0.90**
2.45	16.00	40.00	474	49.53	356	42.96	282	36.84	---	---	---	34.6	36.7	42.5
2.47	13.00	33.00	470	37.89	352	32.19	279	27.42	23.4	27.7	36.2	43.4	45.4	51.1
2.52	15.50	40.00	460	47.77	345	41.26	274	35.32	---	---	---	34.9	37.1	42.8
2.59	22.00	58.00	447	---	336	60.89	266	53.67	---	---	---	---	---	---
2.60	15.00	40.00	446	45.94	334	39.52	265	33.78	---	---	27.6	35.3	37.4	43.2
2.61	18.00	48.00	444	55.94	333	49.53	264	42.77	---	---	---	---	---	---
2.67	12.00	33.00	435	33.54	326	28.39	259	24.16	24.0	28.4	36.8	44.1	46.1	51.8
2.69	14.50	40.00	431	44.04	324	37.75	257	32.23	---	---	28.0	35.6	37.7	43.5
2.78	14.00	40.00	417	42.08	313	35.95	248	30.66	---	---	28.3	35.9	38.0	43.8
2.88	13.50	40.00	403	40.05	302	34.11	240	29.07	---	---	28.6	36.2	38.4	44.2
ARC-LENGTH CORRECTION FACTOR —>									**0.79**	**0.82**	**0.86**	**0.88**	**0.89**	**0.90**
2.93	16.00	48.00	396	49.60	297	43.02	236	36.88	---	---	---	---	---	34.2
2.99	13.00	40.00	389	37.96	291	32.25	231	27.46	---	---	28.9	36.6	38.7	44.5
3.02	15.50	48.00	384	47.83	288	41.31	229	35.36	---	---	---	---	---	34.5
3.12	15.00	48.00	372	46.00	279	39.56	221	33.82	---	---	---	---	---	34.8
3.15	18.00	58.00	368	56.00	276	49.57	219	42.81	---	---	---	---	---	---
3.22	14.50	48.00	360	44.09	270	37.79	214	32.26	---	---	---	---	---	35.1
3.22	12.00	40.00	360	33.59	270	28.43	214	24.20	---	---	29.5	37.2	39.3	45.2
3.33	14.00	48.00	348	42.13	261	35.98	207	30.69	---	---	---	---	---	35.4
3.45	13.50	48.00	337	40.09	252	34.14	200	29.10	---	---	---	---	---	35.7
3.53	16.00	58.00	329	49.64	246	43.05	195	36.90	---	---	---	---	---	---
ARC-LENGTH CORRECTION FACTOR —>									**---**	**---**	**0.75**	**0.81**	**0.82**	**0.85**
3.57	13.00	48.00	325	38.00	243	32.28	193	27.49	---	---	---	---	---	36.0
3.64	15.50	58.00	319	47.87	239	41.34	190	35.38	---	---	---	---	---	---
3.76	15.00	58.00	309	46.03	232	39.59	184	33.84	---	---	---	---	---	---
3.86	12.00	48.00	301	33.63	226	28.45	179	24.22	---	---	---	---	30.2	36.6
3.88	14.50	58.00	299	44.13	224	37.81	178	32.28	---	---	---	---	---	---
4.01	14.00	58.00	289	42.16	217	36.00	172	30.71	---	---	---	---	---	---
4.16	13.50	58.00	279	40.12	209	34.17	166	29.11	---	---	---	---	---	---
4.31	13.00	58.00	269	38.02	202	32.30	160	27.50	---	---	---	---	---	---
4.65	12.00	58.00	249	33.65	187	28.47	148	24.23	---	---	---	---	---	---
ARC-LENGTH CORRECTION FACTOR —>									**---**	**---**	**---**	**---**	**0.74**	**0.77**

NOTE: Selection program VIA-VISA available at www.ptwizard.com.

DODGE®

D	S-L CLASSIC

STOCK DRIVE SELECTIONS

Ratio	Belt Size/Center Distance																
	D180	D195	D210	D225	D240	D255	D270	D300	D315	D330	D360	D390	D420	D480	D540	D600	D660
1.50	62.9	70.4	77.9	84.9	91.7	99.2	106.7	121.7	129.2	136.7	151.7	166.7	181.7	211.7	241.7	271.7	301.7
1.51	65.7	73.2	80.7	86.9	94.4	101.9	109.4	124.4	131.9	139.5	154.5	169.5	184.5	214.5	244.5	274.5	304.5
1.55	63.3	70.8	78.3	84.5	92.1	99.6	107.1	122.1	129.6	137.1	152.1	167.1	182.1	212.1	242.1	272.1	302.1
1.60	63.6	71.2	78.7	84.9	92.4	99.9	107.4	122.5	130.0	137.5	152.5	167.5	182.5	212.5	242.5	272.5	302.5
1.63	66.4	73.9	81.4	87.7	95.2	102.7	110.2	125.2	132.7	140.2	155.2	170.2	185.2	215.2	245.2	275.3	305.3
	0.93	**0.95**	**0.96**	**0.98**	**0.99**	**1.00**	**1.02**	**1.04**	**1.05**	**1.06**	**1.08**	**1.09**	**1.11**	**1.14**	**1.16**	**1.18**	**1.19**
1.66	64.0	71.5	79.0	85.3	92.8	100.3	107.8	122.8	130.3	137.9	152.9	167.9	182.9	212.9	242.9	272.9	302.9
1.66	57.6	65.2	72.7	79.0	86.5	94.0	101.5	116.5	124.0	131.5	146.5	161.6	176.6	206.6	236.6	266.6	296.6
1.71	58.0	65.5	73.1	79.3	86.8	94.4	101.9	116.9	124.4	131.9	146.9	161.9	176.9	207.0	237.0	267.0	297.0
1.77	58.4	65.9	73.4	79.7	87.2	94.7	102.3	117.3	124.8	132.3	147.3	162.3	177.3	207.3	237.4	267.4	297.4
1.79	64.8	72.3	79.8	86.1	93.6	101.1	108.6	123.6	131.1	138.6	153.6	168.6	183.6	213.7	243.7	273.7	303.7
1.80	42.0	49.7	57.3	63.6	71.2	78.7	86.3	101.3	108.9	116.4	131.4	146.5	161.5	191.5	221.5	251.6	281.6
1.81	51.1	58.6	66.2	72.5	80.0	87.5	95.1	110.1	117.6	125.1	140.2	155.2	170.2	200.2	230.2	260.3	290.3
1.83	58.7	66.3	73.8	80.1	87.6	95.1	102.6	117.7	125.2	132.7	147.7	162.7	177.7	207.7	237.7	267.7	297.8
1.89	59.1	66.6	74.2	80.5	88.0	95.5	103.0	118.0	125.5	133.1	148.1	163.1	178.1	208.1	238.1	268.1	298.1
1.96	59.5	67.0	74.6	80.8	88.3	95.9	103.4	118.4	125.9	133.4	148.5	163.5	178.5	208.5	238.5	268.5	298.5
2.02	52.5	60.1	67.7	73.9	81.5	89.0	96.6	111.6	119.1	126.6	141.7	156.7	171.7	201.8	231.8	261.8	291.8
2.03	59.8	67.4	74.9	81.2	88.7	96.2	103.8	118.8	126.3	133.8	148.8	163.9	178.9	208.9	238.9	268.9	298.9
2.09	52.9	60.4	68.0	74.3	81.9	89.4	96.9	112.0	119.5	127.0	142.1	157.1	172.1	202.1	232.2	262.2	292.2
2.15	---	42.2	50.0	56.5	64.1	71.8	79.4	94.6	102.1	109.7	124.8	139.8	154.9	185.0	215.1	245.1	275.1
2.15	53.2	60.8	68.4	74.7	82.2	89.8	97.3	112.4	119.9	127.4	142.4	157.5	172.5	202.5	232.5	262.6	292.6
2.18	44.8	52.5	60.1	66.5	74.1	81.6	89.2	104.3	111.8	119.4	134.4	149.5	164.5	194.6	224.6	254.6	284.7
2.19	60.6	68.1	75.7	81.9	89.5	97.0	104.5	119.5	127.1	134.6	149.6	164.6	179.6	209.7	239.7	269.7	299.7
2.23	53.6	61.2	68.7	75.0	82.6	90.1	97.7	112.7	120.3	127.8	142.8	157.8	172.9	202.9	232.9	262.9	293.0
2.30	53.9	61.5	69.1	75.4	83.0	90.5	98.0	113.1	120.6	128.2	143.2	158.2	173.2	203.3	233.3	263.3	293.4
2.38	54.3	61.9	69.5	75.8	83.3	90.9	98.4	113.5	121.0	128.5	143.6	158.6	173.6	203.7	233.7	263.7	293.7
	0.91	**0.93**	**0.95**	**0.96**	**0.98**	**0.99**	**1.00**	**1.03**	**1.04**	**1.05**	**1.07**	**1.09**	**1.10**	**1.13**	**1.16**	**1.18**	**1.19**
2.45	46.1	53.9	61.5	67.9	75.5	83.1	90.6	105.8	113.3	120.8	135.9	151.0	166.0	196.1	226.1	256.2	286.2
2.47	54.6	62.2	69.8	76.1	83.7	91.2	98.8	113.9	121.4	128.9	143.9	159.0	174.0	204.0	234.1	264.1	294.1
2.52	46.5	54.2	61.9	68.2	75.8	83.4	91.0	106.1	113.7	121.2	136.3	151.3	166.4	196.5	226.5	256.5	286.6
2.59	---	---	---	46.6	54.6	62.5	70.3	85.7	93.4	101.0	116.2	131.4	146.5	176.7	206.8	236.9	267.0
2.60	46.8	54.5	62.2	68.6	76.2	83.8	91.4	106.5	114.0	121.6	136.7	151.7	166.8	196.8	226.9	256.9	287.0
2.61	36.8	44.8	52.7	59.2	66.9	74.6	82.2	97.4	105.0	112.6	127.7	142.8	157.9	188.0	218.1	248.1	278.2
2.67	55.3	62.9	70.5	76.9	84.4	92.0	99.5	114.6	122.1	129.6	144.7	159.7	174.8	204.8	234.8	264.9	294.9
2.69	47.1	54.9	62.6	68.9	76.6	84.2	91.7	106.9	114.4	122.0	137.0	152.1	167.1	197.2	227.3	257.3	287.3
2.78	47.5	55.2	62.9	69.3	76.9	84.5	92.1	107.2	114.8	122.3	137.4	152.5	167.5	197.6	227.6	257.7	287.7
2.88	47.8	55.6	63.3	69.6	77.3	84.9	92.5	107.6	115.1	122.7	137.8	152.8	167.9	198.0	228.0	258.1	288.1
	0.91	**0.93**	**0.95**	**0.96**	**0.98**	**0.99**	**1.00**	**1.03**	**1.04**	**1.05**	**1.07**	**1.09**	**1.10**	**1.13**	**1.16**	**1.18**	**1.19**
2.93	38.0	46.1	54.0	60.5	68.3	76.0	83.6	98.9	106.5	114.0	129.2	144.3	159.4	189.5	219.6	249.6	279.7
2.99	48.2	55.9	63.6	70.0	77.6	85.2	92.8	108.0	115.5	123.1	138.1	153.2	168.3	198.3	228.4	258.4	288.5
3.02	38.4	46.5	54.4	60.9	68.6	76.3	84.0	99.2	106.8	114.4	129.5	144.6	159.7	189.9	220.0	250.0	280.1
3.12	38.7	46.8	54.7	61.2	69.0	76.7	84.3	99.6	107.2	114.8	129.9	145.0	160.1	190.2	220.3	250.4	280.5
3.15	---	---	42.3	49.2	57.2	65.2	73.0	88.5	96.2	103.8	119.1	134.3	149.4	179.6	209.8	239.9	270.0
3.22	39.0	47.1	55.0	61.6	69.3	77.0	84.7	99.9	107.5	115.1	130.3	145.4	160.5	190.6	220.7	250.8	280.8
3.22	48.8	56.6	64.3	70.7	78.3	85.9	93.5	108.7	116.2	123.8	138.9	153.9	169.0	199.1	229.2	259.2	289.2
3.33	39.3	47.4	55.4	61.9	69.7	77.4	85.0	100.3	107.9	115.5	130.6	145.7	160.8	191.0	221.1	251.2	281.2
3.45	39.6	47.8	55.7	62.2	70.0	77.7	85.4	100.6	108.2	115.8	131.0	146.1	161.2	191.3	221.5	251.5	281.6
3.53	---	---	43.5	50.4	58.5	66.5	74.3	89.9	97.5	105.2	120.5	135.7	150.8	181.1	211.3	241.4	271.5
	0.86	**0.89**	**0.91**	**0.93**	**0.95**	**0.97**	**0.98**	**1.01**	**1.02**	**1.03**	**1.05**	**1.07**	**1.09**	**1.12**	**1.15**	**1.17**	**1.18**
3.57	39.9	48.1	56.0	62.6	70.3	78.1	85.7	101.0	108.6	116.2	131.3	146.5	161.6	191.7	221.8	251.9	282.0
3.64	---	---	43.8	50.8	58.9	66.8	74.7	90.2	97.9	105.6	120.8	136.0	151.2	181.5	211.6	241.8	271.9
3.76	---	---	44.1	51.1	59.2	67.2	75.0	90.5	98.2	105.9	121.2	136.4	151.6	181.8	212.0	242.1	272.2
3.86	40.6	48.7	56.7	63.2	71.0	78.7	86.4	101.7	109.3	116.9	132.1	147.2	162.3	192.5	222.6	252.7	282.7
3.88	---	---	44.4	51.4	59.5	67.5	75.3	90.9	98.6	106.3	121.5	136.8	151.9	182.2	212.4	242.5	272.6
4.01	---	---	44.7	51.7	59.8	67.8	75.7	91.2	98.9	106.6	121.9	137.1	152.3	182.6	212.7	242.9	273.0
4.16	---	36.2	45.0	52.0	60.2	68.1	76.0	91.6	99.3	107.0	122.2	137.5	152.7	182.9	213.1	243.3	273.4
4.31	---	36.5	45.3	52.3	60.5	68.5	76.3	91.9	99.6	107.3	122.6	137.8	153.0	183.3	213.5	243.6	273.7
4.65	---	37.1	45.9	53.0	61.1	69.1	77.0	92.6	100.3	108.0	123.3	138.5	153.7	184.0	214.2	244.4	274.5
	0.80	**0.85**	**0.88**	**0.90**	**0.93**	**0.95**	**0.96**	**0.99**	**1.00**	**1.02**	**1.04**	**1.06**	**1.08**	**1.11**	**1.14**	**1.16**	**1.17**

NOTE: Selection program VIA-VISA available at www.ptwizard.com.

SELECTION

DODGE®

A	S-L CLASSIC

AX	CLASSIC COG

Basic Horsepower Ratings

Faster Shaft	Rated HP per Belt for Small Sheave Datum Dia.																					
	2.2	2.6	3.0		3.2		3.4		3.6		3.8		4.0		4.2		4.6		4.8		5.0	
RPM	AX	AX	A	AX	A	AX	A	AX	A	AX	A	AX	A	AX	A	AX	A	AX	A	AX	A	AX
870	1.02	1.40	1.31	1.78	1.51	1.96	1.71	2.14	1.91	2.32	2.10	2.50	2.30	2.68	2.49	2.86	2.87	3.20	3.06	3.38	3.25	3.55
1160	1.22	1.70	1.62	2.18	1.87	2.41	2.13	2.64	2.38	2.87	2.63	3.10	2.88	3.32	3.13	3.55	3.62	3.98	3.85	4.20	4.10	4.42
1750	1.52	2.21	2.13	2.87	2.50	3.20	2.86	3.52	3.21	3.83	3.57	4.15	3.92	4.46	4.26	4.77	4.94	5.37	5.28	5.67	5.61	5.96
3500	1.97	3.14	3.02	4.26	3.63	4.80	4.22	5.34	4.80	5.86	5.36	6.37	5.91	6.88	6.44	7.37	7.44	8.32	7.92	8.78	8.38	9.23
100	0.21	0.27	0.23	0.33	0.26	0.36	0.29	0.38	0.32	0.41	0.35	0.44	0.37	0.47	0.40	0.50	0.46	0.55	0.46	0.58	0.51	0.61
200	0.36	0.47	0.42	0.57	0.47	0.63	0.52	0.68	0.57	0.73	0.63	0.78	0.68	0.83	0.73	0.88	0.83	0.99	0.88	1.04	0.93	1.09
300	0.49	0.64	0.58	0.79	0.65	0.87	0.73	0.94	0.81	1.02	0.88	1.09	0.96	1.16	1.03	1.23	1.18	1.38	1.25	1.45	1.33	1.52
400	0.60	0.80	0.72	0.99	0.82	1.09	0.92	1.18	1.02	1.28	1.12	1.37	1.22	1.46	1.31	1.56	1.50	1.74	1.60	1.83	1.70	1.92
500	0.70	0.94	0.86	1.18	0.98	1.29	1.10	1.41	1.22	1.52	1.34	1.63	1.46	1.75	1.58	1.86	1.82	2.08	1.93	2.19	2.05	2.29
600	0.80	1.08	0.99	1.35	1.14	1.49	1.28	1.62	1.42	1.75	1.56	1.88	1.70	2.01	1.84	2.14	2.11	2.40	2.25	2.53	2.39	2.65
700	0.88	1.20	1.12	1.52	1.28	1.67	1.44	1.82	1.61	1.97	1.77	2.12	1.93	2.27	2.09	2.42	2.40	2.71	2.56	2.85	2.72	3.00
800	0.97	1.32	1.23	1.67	1.42	1.84	1.60	2.01	1.78	2.18	1.97	2.35	2.15	2.52	2.33	2.68	2.68	3.00	2.86	3.17	3.03	3.32
900	1.04	1.44	1.35	1.82	1.55	2.01	1.75	2.20	1.96	2.38	2.16	2.57	2.36	2.75	2.56	2.93	2.95	3.29	3.15	3.47	3.34	3.64
1000	1.11	1.54	1.45	1.96	1.68	2.17	1.90	2.37	2.12	2.58	2.34	2.78	2.56	2.98	2.78	3.17	3.21	3.56	3.43	3.76	3.64	3.95
1100	1.18	1.64	1.56	2.10	1.80	2.32	2.04	2.54	2.29	2.76	2.52	2.98	2.76	3.20	3.00	3.41	3.47	3.83	3.70	4.04	3.93	4.24
1200	1.24	1.74	1.66	2.23	1.92	2.47	2.18	2.71	2.44	2.94	2.70	3.18	2.96	3.41	3.21	3.64	3.71	4.09	3.96	4.31	4.21	4.53
1300	1.30	1.83	1.75	2.36	2.03	2.61	2.31	2.87	2.59	3.12	2.87	3.37	3.14	3.61	3.41	3.86	3.95	4.34	4.22	4.57	4.48	4.81
1400	1.35	1.92	1.84	2.46	2.14	2.75	2.44	3.02	2.74	3.29	3.03	3.55	3.32	3.81	3.61	4.07	4.18	4.58	4.47	4.83	4.75	5.08
1500	1.41	2.01	1.93	2.59	2.25	2.88	2.57	3.17	2.88	3.45	3.19	3.73	3.50	4.00	3.81	4.28	4.41	4.81	4.71	5.08	5.00	5.34
1600	1.46	2.09	2.01	2.71	2.35	3.01	2.69	3.31	3.02	3.61	3.35	3.90	3.67	4.19	3.99	4.48	4.63	5.04	4.94	5.32	5.25	5.59
1700	1.50	2.17	2.09	2.82	2.45	3.13	2.80	3.45	3.15	3.76	3.49	4.07	3.84	4.37	4.17	4.67	4.84	5.26	5.17	5.55	5.49	5.84
1800	1.55	2.24	2.17	2.92	2.54	3.26	2.91	3.58	3.28	3.91	3.64	4.23	4.00	4.55	4.35	4.86	5.05	5.46	5.39	5.78	5.73	6.08
1900	1.59	2.32	2.25	3.02	2.64	3.37	3.02	3.71	3.40	4.05	3.78	4.39	4.15	4.72	4.52	5.05	5.24	5.69	5.60	6.00	5.95	6.32
2000	1.63	2.38	2.32	3.12	2.72	3.48	3.13	3.84	3.52	4.19	3.91	4.54	4.30	4.88	4.68	5.22	5.44	5.89	5.81	6.22	6.17	6.54
2100	1.66	2.45	2.39	3.22	2.81	3.59	3.23	3.96	3.64	4.33	4.04	4.69	4.45	5.05	4.84	5.40	5.62	6.09	6.00	6.43	6.38	6.76
2200	1.70	2.52	2.45	3.31	2.89	3.70	3.32	4.08	3.75	4.46	4.17	4.84	4.59	5.20	5.00	5.57	5.80	6.28	6.19	6.63	6.58	6.98
2300	1.73	2.58	2.51	3.40	2.97	3.80	3.41	4.20	3.86	4.59	4.29	4.98	4.72	5.36	5.14	5.73	5.97	6.47	6.37	6.83	6.77	7.19
2400	1.76	2.64	2.57	3.49	3.04	3.90	3.50	4.31	3.96	4.71	4.41	5.11	4.85	5.51	5.28	5.89	6.13	6.65	6.55	7.02	6.96	7.39
2500	1.79	2.69	2.63	3.57	3.11	4.00	3.59	4.42	4.06	4.84	4.52	5.25	4.97	5.65	5.42	6.05	6.29	6.83	6.72	7.21	7.13	7.59
2600	1.81	2.75	2.68	3.65	3.18	4.09	3.67	4.53	4.15	4.95	4.63	5.38	5.09	5.79	5.55	6.20	6.44	7.00	6.87	7.39	7.30	7.78
2700	1.84	2.80	2.73	3.73	3.24	4.18	3.75	4.63	4.24	5.07	4.73	5.50	5.20	5.93	5.67	6.35	6.58	7.17	7.02	7.57	7.46	7.96
2800	1.86	2.85	2.78	3.80	3.30	4.27	3.82	4.73	4.33	5.18	4.82	5.62	5.31	6.06	5.79	6.49	6.72	7.33	7.17	7.74	7.61	8.14
2900	1.88	2.90	2.82	3.88	3.36	4.35	3.89	4.82	4.41	5.29	4.92	5.74	5.41	6.19	5.90	6.63	6.85	7.49	7.30	7.90	7.74	8.32
3000	1.90	2.94	2.86	3.95	3.41	4.44	3.95	4.92	4.48	5.39	5.00	5.85	5.51	6.31	6.01	6.76	6.97	7.64	7.43	8.06	7.87	8.48
3100	1.92	2.98	2.90	4.01	3.46	4.51	4.02	5.01	4.56	5.49	5.09	5.97	5.60	6.43	6.11	6.89	7.08	7.78	7.54	8.22	8.00	8.64
3200	1.93	3.03	2.94	4.08	3.51	4.59	4.07	5.09	4.62	5.59	5.16	6.07	5.69	6.55	6.20	7.02	7.18	7.93	7.65	8.37	8.11	8.80
3300	1.95	3.06	2.97	4.14	3.55	4.66	4.13	5.18	4.69	5.68	5.23	6.18	5.77	6.66	6.28	7.14	7.28	8.06	7.75	8.51	8.21	8.95
3400	1.96	3.10	3.00	4.20	3.59	4.74	4.18	5.26	4.75	5.77	5.30	6.28	5.84	6.77	6.36	7.25	7.36	8.19	7.84	8.65	8.30	9.10
3500	1.97	3.14	3.02	4.26	3.63	4.80	4.22	5.34	4.80	5.86	5.36	6.37	5.91	6.88	6.44	7.37	7.44	8.32	7.92	8.78	8.38	9.23
3600	1.98	3.17	3.04	4.31	3.56	4.87	4.26	5.41	4.85	5.94	5.42	6.47	5.97	6.98	6.50	7.48	7.51	8.44	7.99	8.91	8.45	9.37
3700	1.99	3.20	3.06	4.37	3.69	4.93	4.30	5.49	4.89	6.03	5.47	6.56	6.02	7.07	6.56	7.58	7.57	8.56	8.05	9.03	8.50	9.50
3800	1.99	3.23	3.08	4.42	3.71	4.99	4.33	5.55	4.93	6.10	5.51	6.64	6.07	7.17	6.61	7.68	7.63	8.67	8.10	9.15	8.55	9.62
3900	2.00	3.26	3.09	4.47	3.74	5.05	4.36	5.62	4.97	6.18	5.55	6.73	6.11	7.26	6.65	7.78	7.67	8.78	8.14	9.26	8.59	9.73
4000	2.00	3.29	3.10	4.51	3.75	5.11	4.38	5.69	4.99	6.25	5.58	6.81	6.15	7.34	6.69	7.87	7.70	8.88	8.17	9.37	8.61	9.84

NOTE: Selection program VIA-VISA available at www.ptwizard.com.

DODGE®

A	S-L CLASSIC	AX	CLASSIC COG

Basic Horsepower Ratings

Faster Shaft RPM	Rated HP per Belt for Small Sheave Datum Dia.														Add'l HP/Belt for Speed Ratio of:								
	5.2		5.6		5.8		6.0		6.4		6.6		7.0		1.02	1.05	1.09	1.13	1.19	1.25	1.35	1.52	2.00
	A	AX	A	AX	A	AX	A	AX	A	AX	A	AX	A	AX	1.04	1.08	1.12	1.18	1.24	1.34	1.51	1.99	& up
870	3.44	3.72	3.81	4.05	3.99	4.22	4.18	4.38	4.54	4.71	4.72	4.87	5.08	5.19	0.03	0.05	0.08	0.10	0.13	0.15	0.16	0.20	0.23
1160	4.34	4.63	4.81	5.05	5.04	5.26	5.28	5.47	5.74	5.87	5.96	6.08	6.42	6.48	0.03	0.06	0.10	0.13	0.17	0.20	0.21	0.26	0.29
1750	5.94	6.25	6.59	6.83	6.90	7.11	7.22	7.39	7.84	7.94	8.14	8.21	8.73	8.75	0.04	0.09	0.15	0.20	0.26	0.30	0.35	0.40	0.44
3500	8.82	9.68	9.64	10.53	10.02	10.94	10.38	11.34	11.03	12.10	11.32	12.47	---	---	0.08	0.19	0.31	0.41	0.52	0.60	0.70	0.79	0.87
100	0.54	0.63	0.59	0.69	0.62	0.71	0.64	0.74	0.70	0.79	0.72	0.82	0.78	0.87	0.00	0.01	0.01	0.01	0.01	0.02	0.02	0.02	0.02
200	0.98	1.13	1.09	1.23	1.14	1.28	1.19	1.33	1.29	1.43	1.34	1.47	1.43	1.57	0.00	0.01	0.02	0.02	0.03	0.03	0.04	0.04	0.05
300	1.40	1.59	1.54	1.73	1.62	1.79	1.69	1.86	1.83	2.00	1.90	2.07	2.05	2.20	0.01	0.02	0.03	0.03	0.04	0.05	0.05	0.06	0.06
400	1.79	2.01	1.98	2.18	2.07	2.27	2.17	2.36	2.35	2.53	2.44	2.62	2.63	2.79	0.01	0.02	0.03	0.04	0.06	0.07	0.08	0.09	0.09
500	2.16	2.40	2.39	2.62	2.51	2.72	2.62	2.83	2.85	3.03	2.96	3.14	3.18	3.34	0.01	0.03	0.04	0.06	0.07	0.08	0.10	0.11	0.12
600	2.52	2.78	2.79	3.03	2.93	3.15	3.06	3.27	3.33	3.51	3.46	3.63	3.72	3.87	0.01	0.03	0.05	0.07	0.09	0.10	0.12	0.13	0.15
700	2.87	3.14	3.18	3.42	3.33	3.56	3.49	3.70	3.79	3.97	3.94	4.11	4.24	4.38	0.02	0.04	0.06	0.08	0.10	0.12	0.14	0.16	0.17
800	3.21	3.48	3.55	3.80	3.73	3.95	3.90	4.11	4.24	4.41	4.41	4.56	4.74	4.86	0.02	0.04	0.07	0.09	0.12	0.14	0.16	0.18	0.20
900	3.53	3.82	3.92	4.16	4.11	4.33	4.30	4.50	4.67	4.84	4.86	5.00	5.23	5.33	0.02	0.05	0.08	0.10	0.13	0.15	0.18	0.20	0.22
1000	3.85	4.14	4.27	4.51	4.48	4.70	4.68	4.88	5.09	5.25	5.29	5.43	5.70	5.78	0.02	0.05	0.09	0.11	0.15	0.17	0.20	0.22	0.25
1100	4.16	4.45	4.61	4.85	4.83	5.05	5.06	5.25	5.50	5.64	5.72	5.84	6.15	6.22	0.02	0.06	0.09	0.13	0.16	0.19	0.22	0.25	0.27
1200	4.45	4.75	4.94	5.18	5.18	5.40	5.42	5.61	5.89	6.03	6.13	6.23	6.59	6.64	0.03	0.06	0.10	0.14	0.18	0.21	0.24	0.27	0.29
1300	4.74	5.04	5.26	5.50	5.52	5.73	5.77	5.95	6.27	6.40	6.52	6.62	7.01	7.05	0.03	0.07	0.11	0.15	0.19	0.22	0.26	0.29	0.32
1400	5.02	5.32	5.57	5.81	5.84	6.05	6.11	6.29	6.64	6.76	6.91	6.99	7.42	7.45	0.03	0.07	0.12	0.16	0.21	0.24	0.28	0.31	0.35
1500	5.30	5.60	5.88	6.11	6.16	6.37	6.44	6.62	7.00	7.11	7.28	7.35	7.82	7.84	0.03	0.08	0.13	0.17	0.22	0.26	0.30	0.33	0.37
1600	5.56	5.87	6.17	6.40	6.47	6.67	6.76	6.93	7.34	7.45	7.63	7.71	8.20	8.21	0.04	0.08	0.14	0.19	0.24	0.27	0.32	0.36	0.40
1700	5.82	6.13	6.45	6.69	6.76	6.97	7.07	7.24	7.68	7.78	7.97	8.05	8.56	8.57	0.04	0.09	0.15	0.20	0.25	0.29	0.34	0.38	0.42
1800	6.06	6.38	6.72	6.96	7.04	7.25	7.36	7.54	7.99	8.10	8.30	8.38	8.90	8.92	0.04	0.09	0.16	0.21	0.27	0.31	0.36	0.41	0.45
1900	6.30	6.62	6.98	7.23	7.32	7.53	7.65	7.83	8.30	8.41	8.61	8.70	9.23	9.26	0.04	0.10	0.17	0.22	0.28	0.32	0.38	0.43	0.47
2000	6.53	6.86	7.23	7.49	7.58	7.80	7.92	8.11	8.59	8.71	8.91	9.01	9.55	9.59	0.05	0.11	0.18	0.23	0.29	0.34	0.40	0.45	0.49
2100	6.75	7.10	7.48	7.75	7.83	8.07	8.18	8.38	8.86	9.00	9.19	9.31	9.84	9.90	0.05	0.11	0.19	0.24	0.31	0.36	0.42	0.47	0.52
2200	6.96	7.32	7.71	7.99	8.07	8.32	8.43	8.65	9.12	9.28	9.46	9.60	10.12	10.21	0.05	0.12	0.20	0.26	0.32	0.38	0.44	0.49	0.55
2300	7.16	7.54	7.93	8.23	8.30	8.57	8.66	8.90	9.37	9.56	9.71	9.88	10.38	10.50	0.05	0.12	0.21	0.27	0.34	0.40	0.46	0.51	0.57
2400	7.36	7.75	8.14	8.46	8.51	8.81	8.88	9.15	9.60	9.82	9.95	10.15	10.62	10.79	0.05	0.13	0.21	0.28	0.36	0.42	0.46	0.54	0.60
2500	7.54	7.96	8.33	8.68	8.72	9.04	9.09	9.39	9.82	10.07	10.17	10.41	10.83	11.06	0.05	0.13	0.22	0.29	0.37	0.43	0.49	0.56	0.62
2600	7.71	8.16	8.52	8.90	8.91	9.26	9.29	9.62	10.02	10.32	10.37	10.56	11.03	11.32	0.06	0.14	0.23	0.30	0.39	0.45	0.51	0.58	0.65
2700	7.88	8.35	8.69	9.11	9.09	9.48	9.47	9.84	10.20	10.55	10.55	10.90	11.21	11.57	0.06	0.14	0.24	0.31	0.40	0.46	0.53	0.61	0.67
2800	8.03	8.54	8.86	9.31	9.25	9.69	9.63	10.06	10.37	10.78	10.71	11.13	11.37	11.81	0.06	0.15	0.25	0.32	0.42	0.46	0.56	0.63	0.69
2900	8.18	8.72	9.01	9.51	9.40	9.89	9.79	10.27	10.52	11.00	10.86	11.35	11.51	12.04	0.06	0.16	0.26	0.33	0.43	0.48	0.58	0.65	0.71
3000	8.31	8.89	9.14	9.69	9.54	10.08	9.92	10.47	10.65	11.21	10.99	11.57	11.62	12.26	0.07	0.16	0.27	0.35	0.45	0.51	0.60	0.67	0.74
3100	8.43	9.06	9.27	9.88	9.67	10.27	10.05	10.66	10.76	11.40	11.10	11.77	11.71	12.47	0.07	0.17	0.27	0.36	0.47	0.53	0.62	0.69	0.77
3200	8.55	9.23	9.38	10.05	9.78	10.45	10.15	10.84	10.86	11.59	11.18	11.96	11.78	12.66	0.07	0.17	0.28	0.37	0.48	0.55	0.64	0.72	0.08
3300	8.65	9.38	9.38	10.22	9.87	10.62	10.24	11.01	10.93	11.77	11.25	12.14	11.83	12.84	0.07	0.18	0.27	0.38	0.49	0.57	0.66	0.74	0.82
3400	8.74	9.53	9.57	10.38	9.95	10.78	10.32	11.18	10.99	10.94	11.30	12.31	11.85	13.02	0.08	0.19	0.30	0.40	0.50	0.59	0.68	0.76	0.84
3500	8.82	9.68	9.64	10.53	10.02	10.94	10.38	11.34	11.03	12.10	11.32	12.47	---	---	0.08	0.20	0.31	0.41	0.51	0.60	0.70	0.79	0.86
3600	8.88	9.81	9.69	10.67	10.07	11.08	10.42	11.49	11.05	12.26	11.33	12.62	---	---	0.08	0.20	0.32	0.42	0.53	0.62	0.72	0.81	0.89
3700	8.94	9.94	9.74	10.81	10.10	11.22	10.44	11.63	11.04	12.40	---	---	---	---	0.08	0.21	0.33	0.43	0.55	0.64	0.74	0.83	0.91
3800	8.98	10.07	9.76	10.94	10.12	11.36	10.45	11.76	---	---	---	---	---	---	0.09	0.21	0.34	0.44	0.56	0.66	0.76	0.85	0.94
3900	9.01	10.19	9.78	11.06	10.12	11.48	10.43	11.88	---	---	---	---	---	---	0.09	0.22	0.35	0.45	0.58	0.67	0.78	0.87	0.97
4000	9.03	10.30	9.77	11.18	10.10	11.60	---	---	---	---	---	---	---	---	0.09	0.22	0.35	0.47	0.60	0.69	0.80	0.90	1.00

Note: Shaded area indicates operation above 6500 FPM rim speed. Special sheave construction required.

NOTE: Selection program VIA-VISA available at www.ptwizard.com.

SELECTION

DODGE®

B	S-L CLASSIC	BX	CLASSIC COG

Basic Horsepower Ratings

Faster Shaft RPM	Rated HP per Belt for Small Sheave Datum Dia.																			
	3.4		3.6		3.8		4.0		4.2		4.4		4.6		5.0		5.4		5.6	
	B	BX	B	BX	B	BX	B	BX	B	BX	B	BX	B	BX	B	BX	B	BX	B	BX
870	1.42	3.01	1.73	3.27	2.04	3.53	2.35	3.79	2.66	4.04	2.96	4.30	3.27	4.55	3.87	5.04	4.47	5.53	4.76	5.78
1160	1.65	3.72	2.05	4.06	2.45	4.38	2.84	4.71	3.24	5.03	3.63	5.35	4.02	5.67	4.78	6.29	5.54	6.91	5.92	7.21
1750	1.92	4.96	2.48	5.42	3.05	5.87	3.60	6.32	4.15	6.76	4.70	720	5.23	7.63	6.30	8.47	7.33	9.29	7.84	9.69
3500	1.37	7.27	2.27	7.96	3.16	8.64	4.01	9.28	4.84	9.91	5.64	10.51	6.41	11.08	7.87	12.14	92.0	13.10	9.82	13.53
100	0.31	0.53	0.36	0.56	0.40	0.60	0.44	0.64	0.49	0.68	0.53	0.72	0.57	0.76	0.56	0.84	0.75	0.91	0.79	0.95
200	0.53	0.94	0.61	1.01	0.70	1.08	0.78	1.16	0.86	1.23	0.94	1.30	1.02	1.37	1.19	1.51	1.35	1.65	1.43	1.72
300	0.71	1.30	0.83	1.41	0.95	1.51	1.07	1.62	1.19	1.72	1.31	1.82	1.43	1.92	1.66	2.13	1.89	2.33	2.01	2.42
400	0.87	1.64	1.03	1.78	1.18	1.91	1.34	2.05	1.49	2.18	1.64	2.31	1.80	2.44	2.10	2.70	2.40	2.95	2.55	3.08
500	1.01	1.96	1.20	2.13	1.39	2.29	1.58	2.45	1.77	2.61	1.96	2.77	2.14	2.93	2.51	3.24	2.88	3.55	3.06	3.70
600	1.14	2.26	1.36	2.45	1.59	2.64	1.81	2.83	2.03	3.02	225	3.20	2.47	3.39	2.90	3.75	3.33	4.11	3.55	4.29
700	1.25	2.55	1.51	2.77	1.76	2.98	2.02	3.20	2.27	3.41	2.53	3.62	2.78	3.83	3.28	4.25	3.77	4.66	4.01	4.86
800	1.35	2.82	1.64	3.07	1.93	3.31	2.22	3.55	2.50	3.79	2.79	4.02	3.07	4.26	3.63	4.72	4.18	5.18	4.46	5.41
900	1.45	3.09	1.77	3.36	2.09	3.62	2.41	3.89	2.72	4.15	3.04	4.41	3.35	4.67	3.97	5.18	4.58	5.68	4.89	5.93
1000	1.53	3.34	1.88	3.63	2.23	3.92	2.58	4.21	2.93	4.50	3.27	4.78	3.62	5.06	4.29	5.62	4.96	6.17	5.30	6.44
1100	1.61	3.58	1.99	3.90	2.37	4.21	2.75	4.53	3.12	4.84	3.50	5.14	3.87	5.44	4.60	6.04	5.33	6.63	5.69	6.92
1200	1.67	3.82	2.09	4.16	2.50	4.50	2.90	4.83	3.31	5.16	3.71	5.49	4.11	5.81	4.90	6.45	5.68	7.08	6.07	7.40
1300	1.73	4.04	2.18	4.41	2.62	4.77	3.05	5.12	3.48	5.47	3.91	5.82	4.34	6.17	5.18	6.85	6.02	7.52	6.43	7.85
1400	1.79	4.26	2.26	4.65	2.73	5.03	3.19	5.40	3.65	5.78	4.11	6.15	4.56	6.51	5.45	7.23	6.33	7.94	6.77	8.29
1500	1.83	4.47	2.33	4.88	2.83	5.28	3.32	5.68	3.80	6.07	4.29	6.46	4.77	6.85	5.71	7.60	6.64	8.34	7.10	8.71
1600	1.87	4.67	2.40	5.10	2.92	5.52	3.44	5.94	3.95	6.35	4.46	6.76	4.96	7.17	5.95	7.96	6.93	8.73	7.41	9.11
1700	1.90	4.87	2.46	5.32	3.01	5.76	3.55	6.20	4.09	6.63	4.62	7.05	5.15	7.48	6.19	8.30	7.20	9.11	7.70	9.50
1800	1.93	5.06	2.51	5.53	3.08	5.99	3.65	6.44	4.21	6.89	4.77	7.34	5.32	7.77	6.40	8.63	7.46	9.46	7.98	9.87
1900	1.95	5.24	2.55	5.73	3.15	6.21	3.74	6.68	4.33	7.15	4.91	7.61	5.48	8.06	6.61	8.95	7.70	9.81	8.24	10.23
2000	1.96	5.42	2.59	5.92	3.21	6.42	3.83	6.91	4.44	7.39	5.04	7.87	5.63	8.34	6.80	9.25	7.93	10.14	8.49	10.57
2100	1.97	5.58	2.62	6.11	3.27	6.62	3.91	7.13	4.54	7.63	5.16	8.12	5.77	8.60	6.97	9.54	8.14	10.45	8.71	10.89
2200	1.97	5.75	2.65	6.29	3.31	6.82	3.97	7.34	4.63	7.85	5.27	8.36	5.90	8.85	7.14	9.82	8.34	10.75	8.92	11.20
2300	1.96	5.90	2.66	6.46	3.35	7.00	4.03	7.54	4.70	8.07	5.36	8.59	6.02	9.09	7.29	10.08	8.51	11.03	9.11	11.49
2400	1.95	6.05	2.67	6.62	3.38	7.18	4.08	7.74	4.77	8.28	5.45	8.81	6.12	9.33	7.42	10.33	8.67	11.29	928	11.76
2500	1.93	6.19	2.67	6.78	3.40	7.36	4.12	7.92	4.83	8.47	5.53	9.02	6.21	9.54	7.54	10.57	8.82	11.54	9.44	12.01
2600	1.90	6.33	2.67	6.93	3.42	7.52	4.16	8.10	4.88	8.66	5.59	9.21	6.29	9.75	7.65	10.79	8.94	11.78	9.57	12.25
2700	1.87	6.46	2.65	7.08	3.42	7.68	4.18	8.27	4.92	8.84	5.65	9.40	6.36	9.95	7.74	11.00	9.05	11.99	9.68	12.47
2800	1.83	6.58	2.63	7.21	3.42	7.83	4.19	8.42	4.95	9.01	5.69	9.58	6.41	10.13	7.81	11.20	9.14	12.19	9.78	12.67
2900	1.78	6.70	2.60	7.34	3.41	7.97	4.20	8.57	4.97	9.17	5.72	9.74	6.45	10.30	7.87	11.38	9.21	12.38	9.85	12.85
3000	1.73	6.81	2.57	7.46	3.39	8.10	4.19	8.72	4.97	9.32	5.74	9.90	6.48	10.46	7.91	11.54	9.26	12.54	9.90	13.02
3100	1.67	6.92	2.53	7.58	3.36	8.22	4.17	8.85	4.97	9.45	5.74	10.04	6.50	10.61	7.94	11.69	9.29	12.69	9.93	13.16
3200	1.61	7.01	2.47	7.68	3.32	8.34	4.15	8.97	4.95	9.58	5.74	10.18	6.50	10.75	7.95	11.83	9.30	12.82	9.93	13.28
3300	1.53	7.10	2.42	7.78	3.28	8.45	4.11	9.08	4.93	9.70	5.72	10.30	6.48	10.87	7.94	11.95	9.29	12.93	9.92	13.39
3400	1.45	7.19	2.35	7.88	3.22	8.54	4.07	9.19	4.89	9.81	5.69	10.41	6.46	10.98	7.91	12.05	9.25	13.03	9.88	13.47
3500	1.37	7.27	2.27	7.96	3.16	8.64	4.01	9.28	4.84	9.91	5.64	10.51	6.41	11.08	7.87	12.14	9.20	13.10	9.82	13.53
3600	1.27	7.34	2.19	8.04	3.08	8.72	3.95	9.37	4.78	9.99	5.58	10.59	6.36	11.16	7.81	12.22	9.12	13.15	9.73	13.58
3700	1.17	7.40	2.10	8.11	3.00	8.79	3.87	9.44	4.71	10.07	5.51	10.67	6.29	1123	7.73	12.27	9.03	13.19	9.62	13.59
3800	1.06	7.46	2.00	8.17	2.91	8.86	3.78	9.51	4.62	10.13	5.43	10.73	6.20	11.29	7.63	12.31	8.90	13.20	9.46	13.59
3900	0.94	7.51	1.89	8.23	2.80	8.91	3.68	9.57	4.52	10.19	5.33	10.78	6.10	11.33	7.51	12.34	8.76	13.20	9.32	13.57
4000	0.82	7.55	1.77	8.27	2.69	8.96	3.57	9.61	4.41	10.23	5.22	10.81	5.98	11.36	7.37	12.34	8.59	13.17	9.13	13.52

NOTE: Selection program VIA-VISA available at www.ptwizard.com.

DODGE®

B	S-L CLASSIC	BX	CLASSIC COG

Basic Horsepower Ratings

Faster Shaft RPM	Rated HP per Belt for Small Sheave Datum Dia.														Add'l HP/Belt for Speed Ratio of:								
	6.0		6.4		6.8		7.4		8.0		8.6		9.4		1.02	1.05	1.09	1.13	1.19	1.25	1.35	1.52	2.00
	B	BX	B	BX	B	BX	B	BX	B	BX	B	BX	B	BX	1.04	1.08	1.12	1.18	1.24	1.34	1.51	1.99	& up
870	5.35	6.26	5.93	6.73	6.50	7.20	7.36	7.89	8.19	8.56	9.02	9.23	10.10	10.09	0.04	0.01	0.17	0.22	0.28	0.32	0.38	0.42	0.47
1160	6.66	7.81	7.39	8.40	8.12	8.97	9.18	9.82	10.23	10.65	11.25	11.45	12.58	12.49	0.06	0.14	0.22	0.29	0.38	0.43	0.50	0.56	0.63
1750	8.85	10.47	9.83	11.24	10.78	11.98	12.17	13.04	13.50	14.06	14.77	15.02	16.36	16.21	0.09	0.20	0.34	0.44	0.66	0.56	0.70	0.79	0.88
3500	10.95	14.31	11.94	14.97	---	---	---	---	---	---	---	---	---	---	0.18	0.42	0.68	0.89	1.13	1.32	1.52	1.71	1.89
100	0.87	1.03	0.96	1.10	1.04	1.18	1.17	1.29	1.29	1.40	1.42	1.51	1.58	1.65	0.00	0.01	0.02	0.02	0.03	0.03	0.04	0.05	0.05
200	1.59	1.86	1.75	2.09	1.90	2.14	2.14	2.34	2.37	2.54	2.60	2.74	2.91	3.09	0.01	0.02	0.04	0.05	0.06	0.07	0.08	0.09	0.10
300	2.24	2.62	2.47	2.82	2.69	3.01	3.03	3.30	3.37	3.58	3.70	3.86	4.14	4.23	0.01	0.03	0.05	0.07	0.09	0.11	0.13	0.15	0.16
400	2.85	3.33	3.14	3.58	3.44	3.83	3.87	4.20	4.31	4.56	4.74	4.92	5.30	5.39	0.02	0.04	0.07	0.10	0.11	0.15	0.17	0.19	0.21
500	3.42	4.01	3.79	4.31	4.14	4.61	4.67	5.05	5.20	5.49	5.72	5.92	6.41	6.48	0.02	0.06	0.09	0.12	0.16	0.19	0.21	0.24	0.27
600	3.98	4.65	4.40	5.09	4.82	5.35	5.44	5.86	6.06	6.37	6.67	6.87	7.47	7.52	0.03	0.07	0.12	0.15	0.19	0.22	0.26	0.29	0.32
700	4.50	5.26	4.98	5.66	5.46	6.06	6.17	6.64	6.88	7.21	7.57	7.77	8.48	8.51	0.03	0.08	0.14	0.17	0.22	0.26	0.30	0.34	0.38
800	5.01	5.86	5.55	6.30	6.08	6.74	6.88	7.38	7.66	8.02	8.44	8.64	9.45	9.46	0.04	0.09	0.16	0.20	0.26	0.30	0.34	0.39	0.43
900	5.49	6.42	6.09	6.91	6.68	7.39	7.56	8.10	8.42	8.79	9.27	9.47	10.38	10.36	0.04	0.11	0.17	0.23	0.29	0.33	0.39	0.44	0.49
1000	5.96	6.97	6.61	7.50	7.25	8.02	8.20	8.78	9.14	9.53	10.06	10.26	11.26	11.21	0.05	0.12	0.19	0.25	0.32	0.37	0.43	0.49	0.54
1100	6.40	7.50	7.11	8.07	7.80	8.62	8.82	9.44	9.83	10.24	10.81	11.02	12.10	12.02	0.05	0.11	0.21	0.28	0.35	0.41	0.47	0.54	0.59
1200	6.83	8.01	7.58	8.61	8.32	9.20	9.42	10.07	10.49	10.92	11.53	11.74	12.89	12.79	0.06	0.14	0.23	0.30	0.39	0.45	0.52	0.58	0.65
1300	7.24	8.50	8.04	9.14	8.83	9.76	9.98	10.67	11.11	11.56	12.21	12.42	13.63	13.52	0.06	0.15	0.25	0.33	0.42	0.49	0.56	0.64	0.70
1400	7.63	8.97	8.47	9.64	9.30	10.29	10.52	11.25	11.70	12.17	12.85	13.06	14.33	14.20	0.07	0.16	0.27	0.35	0.45	0.53	0.60	0.68	0.76
1500	8.00	9.42	8.89	10.12	9.76	10.80	11.03	11.80	12.26	12.75	13.45	13.67	14.98	14.83	0.07	0.18	0.29	0.38	0.48	0.56	0.65	0.73	0.81
1600	8.35	9.85	9.28	10.58	10.19	11.29	11.51	12.32	12.78	13.30	14.01	14.24	15.57	15.42	0.08	0.19	0.31	0.41	0.52	0.60	0.69	0.78	0.86
1700	8.69	10.27	9.65	11.02	10.59	11.75	11.96	12.81	13.27	13.81	14.53	14.77	16.11	15.96	0.08	0.20	0.33	0.43	0.55	0.64	0.74	0.83	0.92
1800	9.00	10.67	10.09	11.44	10.97	12.19	12.37	13.27	13.72	14.29	15.00	15.25	16.60	16.44	0.09	0.21	0.35	0.45	0.58	0.68	0.78	0.88	0.97
1900	9.30	11.05	10.32	11.84	11.32	12.61	12.76	13.70	14.13	14.74	15.42	15.70	17.03	16.88	0.10	0.22	0.37	0.48	0.61	0.71	0.82	0.93	1.03
2000	9.57	11.41	10.63	12.22	11.65	13.00	13.11	14.11	14.50	15.14	15.80	16.10	17.39	17.26	0.10	0.24	0.39	0.51	0.65	0.75	0.87	0.97	1.08
2100	9.83	11.75	10.91	12.57	11.95	13.36	13.43	14.48	14.83	15.52	16.13	16.47	17.70	17.59	0.11	0.25	0.41	0.53	0.68	0.79	0.91	1.03	1.14
2200	10.06	12.07	11.16	12.91	12.22	13.70	13.72	14.82	15.11	15.85	16.40	16.78	17.94	17.85	0.11	0.26	0.42	0.56	0.71	0.82	0.95	1.08	1.19
2300	10.27	12.37	11.39	13.21	12.46	14.02	13.97	15.13	15.36	16.14	16.63	17.05	18.12	18.08	0.12	0.27	0.44	0.58	0.74	0.86	1.09	1.12	1.24
2400	10.46	12.65	11.59	13.50	12.67	14.30	14.18	15.41	15.56	16.40	16.80	17.27	18.22	18.23	0.12	0.28	0.46	0.61	0.78	0.90	1.02	1.18	1.30
2500	10.63	12.91	11.77	13.76	12.85	14.56	14.35	15.65	15.71	16.61	16.91	17.44	18.26	18.32	0.12	0.29	0.48	0.63	0.83	0.93	1.08	1.22	1.35
2600	10.78	13.15	11.92	14.00	13.00	14.79	14.49	15.86	15.81	16.79	16.96	17.56	---	---	0.13	0.31	0.50	0.56	0.84	0.97	1.13	1.27	1.41
2700	10.90	13.37	12.04	14.22	13.11	14.99	14.58	16.03	15.86	16.92	16.96	17.63	---	---	0.13	0.32	0.52	0.68	0.87	1.01	1.17	1.32	1.46
2800	10.99	13.57	12.14	14.40	13.20	15.17	14.63	16.17	15.87	17.00	16.42	17.74	---	---	0.14	0.33	0.54	0.71	0.91	1.05	1.21	1.37	1.51
2900	11.07	13.75	12.20	14.57	13.25	15.31	14.64	16.27	15.82	17.04	---	---	---	---	0.14	0.34	0.56	0.73	0.94	1.09	1.25	1.42	1.56
3000	11.11	13.90	12.24	14.70	13.26	15.42	14.61	16.33	15.81	17.09	---	---	---	---	0.15	0.36	0.58	0.76	0.97	1.12	1.30	1.47	1.62
3100	11.13	14.06	12.24	14.81	13.24	15.50	14.53	16.36	---	---	---	---	---	---	0.15	0.37	0.60	0.78	0.99	1.14	1.34	1.51	1.67
3200	11.13	14.14	12.21	14.90	13.18	15.55	14.41	16.34	---	---	---	---	---	---	0.16	0.38	0.62	0.81	1.02	1.19	1.39	1.56	1.73
3300	11.10	14.22	12.15	14.95	13.09	15.57	---	---	---	---	---	---	---	---	0.16	0.39	0.64	0.83	1.06	1.23	1.43	1.61	1.77
3400	11.04	14.28	12.06	14.98	12.95	15.55	---	---	---	---	---	---	---	---	0.17	0.40	0.66	0.85	1.10	1.28	1.47	1.56	1.84
3500	10.95	15.31	11.94	14.97	---	---	---	---	---	---	---	---	---	---	0.17	0.41	0.68	0.89	1.12	1.31	1.51	1.71	1.89
3600	10.83	14.32	11.78	14.94	---	---	---	---	---	---	---	---	---	---	0.18	0.43	0.70	0.92	1.15	1.35	1.56	1.76	1.95
3700	10.68	14.31	---	---	---	---	---	---	---	---	---	---	---	---	0.18	0.44	0.71	0.94	1.19	1.39	1.61	1.81	2.01
3800	10.50	14.26	---	---	---	---	---	---	---	---	---	---	---	---	0.19	0.45	0.73	0.96	1.23	1.43	1.66	1.86	2.06
3900	10.30	14.19	---	---	---	---	---	---	---	---	---	---	---	---	0.19	0.46	0.74	0.99	1.27	1.47	1.70	1.91	2.11
4000	---	---	---	---	---	---	---	---	---	---	---	---	---	---	0.20	0.47	0.76	1.02	1.30	1.50	1.74	1.96	2.16

Note: Shaded area indicates operation above 6500 FPM rim speed. Special sheave construction required.

NOTE: Selection program VIA-VISA available at www.ptwizard.com.

SELECTION

DODGE®

C	S-L CLASSIC	CX	CLASSIC COG

Basic Horsepower Ratings

Faster Shaft RPM	Rated HP per Belt for Small Sheave Datum Dia.																			
	6.0		6.5		7.0		7.5		8.0		8.5		9.0		9.5		10.0		10.5	
	C	CX	C	CX	C	CX	C	CX	C	CX	C	CX	C	CX	C	CX	C	CX	C	CX
870	5.57	9.32	6.78	10.36	7.98	11.39	9.16	12.40	10.33	13.40	11.48	14.39	12.62	15.36	13.74	16.32	14.85	17.26	15.95	18.20
1160	6.66	11.62	8.19	12.93	9.69	14.22	11.17	15.48	12.62	16.71	14.05	17.93	15.45	19.11	16.82	20.28	18.17	21.42	19.49	22.54
1750	8.07	15.57	10.11	17.30	12.09	18.97	14.00	20.59	15.84	22.15	17.62	23.65	19.32	25.09	20.94	26.47	22.49	27.78	23.96	29.02
3500	4.78	20.81	6.77	22.53	---	---	---	---	---	---	---	---	---	---	---	---	---	---	---	---
100	1.06	1.53	1.23	1.68	1.41	1.84	1.58	1.99	1.75	2.15	1.92	2.30	2.09	2.45	2.26	2.61	2.43	2.76	2.60	2.91
200	1.86	2.77	2.19	3.06	2.51	3.35	2.84	3.64	3.16	3.92	3.48	4.21	3.80	4.49	4.12	4.77	4.43	5.05	4.75	5.33
300	2.56	3.90	3.03	4.32	3.50	4.73	3.97	5.14	4.44	5.55	4.90	5.96	5.36	6.36	5.81	6.76	6.27	7.16	6.72	7.55
400	3.19	4.96	3.80	5.50	4.41	6.03	5.02	6.56	5.62	7.08	6.22	7.60	6.81	8.12	7.40	8.63	7.99	9.14	8.57	9.65
500	3.77	5.96	4.52	6.62	5.26	7.26	6.00	7.90	6.73	8.54	7.46	9.17	8.18	9.79	8.89	10.41	9.60	11.02	10.31	11.63
600	4.31	6.92	5.19	7.68	6.06	8.44	6.92	9.19	7.78	9.93	8.63	10.56	9.47	11.39	10.31	12.11	11.13	12.82	11.96	13.52
700	4.80	7.84	5.81	8.71	6.81	9.57	7.79	10.42	8.77	11.26	9.74	12.09	10.69	12.91	11.64	13.73	12.58	14.53	13.51	15.33
800	5.27	8.72	6.39	9.69	7.51	10.65	8.61	11.60	9.70	12.54	10.78	13.46	11.85	14.37	12.90	15.27	13.95	16.17	14.98	17.04
900	5.69	9.57	6.94	10.64	8.17	11.69	9.38	12.73	10.58	13.76	11.77	14.77	12.94	15.77	14.09	16.75	15.23	17.72	16.35	18.68
1000	6.09	10.38	7.45	11.55	8.79	12.69	10.11	13.82	11.41	14.94	12.69	16.03	13.96	17.11	15.20	18.17	16.43	19.21	17.63	20.23
1100	6.46	11.17	7.92	12.42	9.37	13.66	10.79	14.87	12.19	16.06	13.56	17.23	14.91	18.38	16.24	19.51	17.54	20.61	18.82	21.70
1200	6.79	11.92	8.36	13.26	9.90	14.58	11.42	15.87	12.91	17.14	14.37	18.38	15.80	19.59	17.20	20.78	18.57	21.94	19.91	23.08
1300	7.09	12.65	8.76	14.07	10.40	15.47	12.00	16.83	13.57	18.16	15.11	19.47	16.61	20.74	18.08	21.98	19.51	23.19	20.90	24.37
1400	7.36	13.35	9.13	14.85	10.85	16.31	12.53	17.74	14.18	19.14	15.78	20.50	17.35	21.82	18.87	23.11	20.35	24.36	21.78	25.58
1500	7.61	14.02	9.45	15.59	11.26	17.12	13.02	18.61	14.73	20.06	16.40	21.48	18.01	22.84	19.58	24.17	21.09	25.45	22.55	26.69
1600	7.82	14.66	9.75	16.30	11.62	17.89	13.45	19.44	15.22	20.94	16.94	22.39	18.60	23.79	20.19	25.15	21.73	26.45	23.21	27.70
1700	7.99	15.27	10.00	16.97	11.94	18.62	13.83	20.22	15.65	21.76	17.41	23.25	19.10	24.68	20.72	26.05	22.27	27.36	23.74	28.61
1800	8.14	15.85	10.21	17.61	12.22	19.31	14.15	20.95	16.02	22.53	17.81	24.04	19.52	25.49	21.14	26.86	22.69	28.17	24.15	29.41
1900	8.25	16.41	10.39	18.22	12.44	19.96	14.42	21.63	16.32	23.24	18.13	24.77	19.84	26.22	21.47	27.60	23.00	28.90	24.42	30.11
2000	8.33	16.93	10.52	18.79	12.62	20.57	14.63	22.27	16.55	23.89	18.37	25.43	20.08	26.88	21.69	28.25	23.18	29.52	24.56	30.69
2100	8.37	17.42	10.61	19.32	12.75	21.13	14.79	22.85	16.71	24.49	18.53	26.02	20.22	27.46	21.80	28.80	23.25	30.04	24.56	31.16
2200	8.38	17.89	10.56	19.82	12.82	21.65	14.88	23.39	16.80	25.02	18.60	26.55	20.27	27.96	21.80	29.27	23.18	30.45	24.41	31.51
2300	8.35	18.32	10.66	20.28	12.85	22.13	14.90	23.87	16.82	25.49	18.59	27.00	20.21	28.38	21.68	29.63	22.98	30.75	---	---
2400	8.28	18.72	10.62	20.70	12.81	22.56	14.86	24.29	16.76	25.90	18.49	27.38	20.05	28.71	21.44	29.90	---	---	---	---
2500	8.17	19.08	10.53	21.08	12.73	22.94	14.76	24.66	16.62	26.25	18.29	27.68	19.78	28.95	21.07	30.07	---	---	---	---
2600	8.03	19.42	10.39	21.42	12.58	25.27	1425	24.98	16.39	23.52	18.00	27.90	19.40	29.11	---	---	---	---	---	---
2700	7.84	19.72	10.20	21.72	12.37	23.56	14.34	25.23	16.09	26.73	17.61	28.04	---	---	---	---	---	---	---	---
2800	7.61	19.98	9.97	21.98	12.10	23.80	14.02	25.43	15.69	26.87	---	---	---	---	---	---	---	---	---	---
2900	7.34	20.21	9.68	22.19	11.77	23.98	13.62	25.56	15.21	26.93	---	---	---	---	---	---	---	---	---	---
3000	7.03	20.41	9.33	22.37	11.38	24.11	13.15	25.63	---	---	---	---	---	---	---	---	---	---	---	---
3100	6.67	20.57	8.94	22.49	10.91	24.19	12.59	25.64	---	---	---	---	---	---	---	---	---	---	---	---
3200	6.27	20.69	8.48	22.57	10.38	24.21	---	---	---	---	---	---	---	---	---	---	---	---	---	---
3300	5.82	20.77	7.97	22.61	9.78	24.17	---	---	---	---	---	---	---	---	---	---	---	---	---	---
3400	5.32	20.81	7.40	22.59	---	---	---	---	---	---	---	---	---	---	---	---	---	---	---	---
3500	4.78	20.81	6.77	22.53	---	---	---	---	---	---	---	---	---	---	---	---	---	---	---	---
3600	4.18	20.77	---	---	---	---	---	---	---	---	---	---	---	---	---	---	---	---	---	---
3700	3.53	20.69	---	---	---	---	---	---	---	---	---	---	---	---	---	---	---	---	---	---
3800	2.83	20.57	---	---	---	---	---	---	---	---	---	---	---	---	---	---	---	---	---	---

Note: Shaded area indicates operation above 6500 FPM rim speed. Special sheave construction required.

NOTE: Selection program VIA-VISA available at www.ptwizard.com.

DODGE®

C	S-L CLASSIC	CX	CLASSIC COG

Basic Horsepower Ratings

Faster	Rated HP per Belt for Small Sheave Datum Dia.										Add'l HP/Belt for Speed Ratio of:					
Shaft	11.0		12.0		13.0		14.0		16.0		1.03	1.10	1.20	1.40	1.80	3.00
RPM	C	CX	C	CX	C	CX	C	CX	C	CX	1.09	1.19	1.39	1.79	2.99	& up
870	17.03	19.12	19.15	20.92	21.21	22.66	23.20	24.36	27.00	27.57	0.13	0.37	0.59	0.82	0.97	1.05
1160	20.78	23.63	23.27	25.74	25.64	27.75	27.88	29.64	31.96	33.10	0.17	0.49	0.79	1.09	1.30	1.40
1750	25.35	30.20	27.86	32.34	30.00	34.18	---	---	---	---	0.26	0.74	1.19	1.65	1.96	2.11
3500	---	---	---	---	---	---	---	---	---	---	0.52	1.47	2.37	3.30	3.92	4.22
100	2.76	3.06	3.10	3.35	3.43	3.65	3.75	3.94	4.40	4.51	0.01	0.04	0.07	0.09	0.11	0.12
200	5.06	5.60	5.68	6.15	6.30	6.69	6.91	7.22	8.12	8.28	0.03	0.08	0.14	0.19	0.22	0.24
300	7.17	7.94	8.06	8.72	8.95	9.49	9.82	10.25	11.55	11.74	0.04	0.13	0.20	0.28	0.34	0.36
400	9.15	10.15	10.29	11.14	11.43	12.12	12.55	13.08	14.75	14.98	0.06	0.17	0.27	0.38	0.45	0.48
500	11.01	12.23	12.39	13.43	13.76	14.60	15.11	15.75	17.75	18.01	0.07	0.21	0.34	0.47	0.56	0.60
600	12.77	14.22	14.38	15.60	15.96	16.95	17.51	18.27	20.54	20.85	0.09	0.25	0.41	0.57	0.67	0.72
700	14.43	16.11	16.24	17.66	18.02	19.17	19.76	20.65	23.12	23.51	0.10	0.29	0.47	0.66	0.78	0.84
800	15.99	17.91	17.99	19.61	19.94	21.27	21.84	22.88	25.48	25.97	0.12	0.34	0.54	0.75	0.90	0.97
900	17.46	19.62	19.62	21.46	21.73	23.24	23.76	24.96	27.62	28.23	0.13	0.38	0.61	0.85	1.01	1.09
1000	18.82	21.24	21.13	23.20	23.36	25.08	25.50	26.89	29.50	30.28	0.15	0.42	0.68	0.94	1.12	1.21
1100	20.08	22.76	22.51	24.82	24.83	26.79	27.05	28.66	31.12	32.11	0.16	0.46	0.75	1.04	1.23	1.33
1200	21.22	24.19	23.75	26.33	26.15	28.35	28.40	30.26	32.47	33.71	0.18	0.51	0.81	1.13	1.34	1.45
1300	22.26	25.52	24.85	27.72	27.28	29.77	29.54	31.69	33.51	35.06	0.19	0.55	0.88	1.23	1.45	1.57
1400	23.17	26.75	25.80	28.98	28.24	31.04	30.46	32.93	34.24	36.16	0.21	0.59	0.95	1.32	1.57	1.69
1500	23.96	27.88	26.60	30.11	29.00	32.15	31.15	33.98	34.63	36.98	0.22	0.63	1.02	1.41	1.68	1.81
1600	24.62	28.89	27.23	31.11	29.56	33.09	31.59	34.83	---	---	0.24	0.67	1.09	1.51	1.79	1.93
1700	25.14	29.79	27.69	31.97	29.91	33.86	31.77	35.47	---	---	0.25	0.72	1.15	1.60	1.90	2.05
1800	25.52	30.58	27.98	32.67	30.04	34.45	---	---	---	---	0.27	0.76	1.22	1.70	2.01	2.17
1900	25.75	31.24	28.07	33.23	---	---	---	---	---	---	0.28	0.80	1.29	1.79	2.13	2.29
2000	25.82	31.77	27.97	33.63	---	---	---	---	---	---	0.30	0.84	1.36	1.89	2.24	2.41
2100	25.74	32.18	---	---	---	---	---	---	---	---	0.31	0.88	1.42	1.98	2.35	2.53
2200	---	---	---	---	---	---	---	---	---	---	0..33	0.93	1.49	2.07	2.46	2.66
2300	---	---	---	---	---	---	---	---	---	---	0.34	0.97	1.56	2.17	2.57	2.78
2400	---	---	---	---	---	---	---	---	---	---	0.36	1.01	1.63	2.26	2.69	2.90
2500	---	---	---	---	---	---	---	---	---	---	0.37	1.05	1.70	2.36	2.80	3.02
2600	---	---	---	---	---	---	---	---	---	---	0.39	1.10	1.76	2.45	2.91	3.14
2700	---	---	---	---	---	---	---	---	---	---	0.40	1.14	1.83	2.54	3.02	3.26
2800	---	---	---	---	---	---	---	---	---	---	0.42	1.18	1.90	2.64	3.13	3.38
2900	---	---	---	---	---	---	---	---	---	---	0.43	1.22	1.97	2.73	3.25	3.50
3000	---	---	---	---	---	---	---	---	---	---	0.45	1.26	2.04	2.83	3.36	3.62
3100	---	---	---	---	---	---	---	---	---	---	0.46	1.31	2.10	2.92	3.47	3.74
3200	---	---	---	---	---	---	---	---	---	---	0.48	1.35	2.17	3.02	3.58	3.86
3300	---	---	---	---	---	---	---	---	---	---	0.49	1.39	2.24	3.11	3.69	3.98
3400	---	---	---	---	---	---	---	---	---	---	0.51	1.43	2.31	3.20	3.80	4.10
3500	---	---	---	---	---	---	---	---	---	---	0.52	1.47	2.37	3.30	3.92	4.22
3600	---	---	---	---	---	---	---	---	---	---	0.54	1.52	2.44	3.39	4.03	4.35
3700	---	---	---	---	---	---	---	---	---	---	0.55	1.56	2.51	3.49	4.14	4.47
3800	---	---	---	---	---	---	---	---	---	---	0.57	1.60	2.58	3.58	4.25	4.59

Note: Shaded area indicates operation above 6500 FPM rim speed. Special sheave construction required.

NOTE: Selection program VIA-VISA available at www.ptwizard.com.

SELECTION

DODGE®

D	S-L CLASSIC

Basic Horsepower Ratings

Faster Shaft RPM	Rated HP per Belt for Small Sheave Datum Dia.											Additional HP/Belt for Speed Ratio of:								
	12.0	13.0	13.5	14.0	14.5	15.0	15.5	16.0	18.0	20.0	22.0	1.02 thru 1.04	1.05 thru 1.08	1.09 thru 1.12	1.13 thru 1.18	1.19 thru 1.24	1.25 thru 1.34	1.35 thru 1.51	1.52 thru 1.99	2.00 and Up
700	19.3	22.7	24.3	25.9	27.6	29.2	30.7	32.3	38.4	44.1	49.5	.26	.60	.98	1.29	1.65	1.91	2.20	2.48	2.75
870	22.2	26.1	28.0	29.9	31.7	33.5	35.3	37.1	43.8	50.0	55.5	.32	.75	1.22	1.61	2.05	2.37	2.74	3.09	3.42
1150	25.7	30.2	32.4	34.5	36.5	38.5	40.5	42.3	49.1	54.6	58.8	.43	1.00	1.63	2.14	2.73	3.16	3.65	4.11	4.56
50	2.26	2.59	2.75	2.91	3.07	3.24	3.40	3.56	4.19	4.82	5.44	.02	.04	.07	.09	.12	.14	.16	.18	.20
100	4.10	4.71	5.02	5.32	5.63	5.93	6.23	6.53	7.73	8.91	10.1	.04	.09	.14	.18	.24	.27	.31	.35	.39
150	5.76	6.65	7.09	7.53	7.97	8.41	8.85	9.28	11.0	12.7	14.4	.06	.13	.21	.28	.35	.41	.47	.53	.59
200	7.32	8.47	9.04	9.61	10.2	10.7	11.3	11.9	14.1	16.3	18.5	.07	.17	.28	.37	.47	.54	.63	.71	.79
300	10.2	11.8	12.7	13.5	14.3	15.1	15.9	16.7	19.9	23.0	26.1	.11	.26	.42	.55	.71	.82	.94	1.06	1.18
400	12.8	14.9	16.0	17.0	18.1	19.1	20.1	21.1	25.2	29.2	33.0	.15	.35	.56	.74	.94	1.09	1.26	1.42	1.57
500	15.1	17.7	19.0	20.3	21.5	22.8	24.0	25.2	30.0	34.7	39.3	.19	.43	.70	.92	1.18	1.36	1.57	1.77	1.96
600	17.3	20.3	21.8	23.2	24.7	26.1	27.5	28.9	34.4	39.7	44.8	.22	.52	.84	1.11	1.41	1.63	1.89	2.13	2.36
700	19.3	22.7	24.3	25.9	27.6	29.2	30.7	32.3	38.3	44.1	49.5	.26	.60	.98	1.29	1.65	1.91	2.20	2.48	2.75
800	21.1	24.8	26.6	28.4	30.1	31.9	33.6	35.3	41.7	47.8	53.4	.30	.69	1.13	1.48	1.88	2.18	2.52	2.84	3.14
900	22.6	26.6	28.6	30.5	32.4	34.2	36.0	37.8	44.6	50.7	56.3	.34	.78	127	1.66	2.12	2.45	2.83	3.19	3.53
1000	24.0	28.2	30.3	32.3	34.3	36.2	38.1	39.9	46.8	52.9	58.2	.37	.86	1.41	1.85	2.35	2.72	3.15	3.55	3.93
1100	25.1	29.5	31.7	33.8	35.8	37.8	39.7	41.6	48.4	54.2	58.9	.41	.95	1.55	2.03	2.59	3.00	3.46	3.90	4.32
1200	26.0	30.6	32.8	34.9	36.9	38.9	40.9	42.7	49.3	54.6	58.5	.45	1.04	1.69	2.21	2.82	3.27	3.78	4.26	4.71
1300	26.7	31.3	33.5	35.7	37.7	39.7	41.5	43.3	49.5	54.0	56.8	.49	1.12	1.83	2.40	3.06	3.54	4.09	4.61	5.11
1400	27.0	31.7	33.9	36.0	38.0	39.9	41.7	43.4	48.9	52.4	53.6	.52	1.21	1.97	2.58	3.29	3.81	4.41	4.97	5.50
1500	27.1	31.8	33.9	36.0	37.9	39.7	41.3	42.8	47.4	49.6	49.1	.56	1.30	2.11	2.77	3.53	4.09	4.72	5.32	5.89
1600	27.0	31.5	33.6	35.5	37.3	38.9	40.3	41.6	45.1	45.6	42.9	.60	1.38	2.25	2.95	3.76	4.36	5.04	5.68	6.28
1700	26.5	30.9	32.8	34.6	36.1	37.5	38.8	39.8	41.8	40.4	35.0	.63	1.47	2.39	3.14	4.00	4.63	5.35	6.03	6.68
1800	25.7	29.8	31.6	33.1	34.5	35.6	36.5	37.2	37.6	33.8	---	.67	1.55	2.53	3.32	4.23	4.90	5.67	6.38	7.07

Shaded areas indicate rim speed exceeding 6500 FPM which may require special sheaves

IDLER

Brackets and Bushings

- Double Adjustable Bracket for Maximum Flexibility
- Positive Ratchet Locking Between Base and Arm
- Idler Bushings in TAPER-LOCK and QD Style
- Use with Stock Products, such as: Sheaves, Roller Chain Sprockets, HTD Sprockets
- Compatible with Products Machined for:

  TAPER-LOCK 1610, 2012 and 2517 Bushings QD SK, SF and E Bushings
- Also, NEMA - Motor Bases Shaft Collars

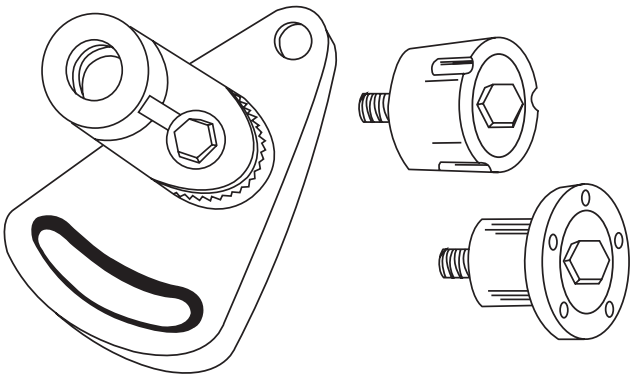

Refer to Related Products (page PT12-40) for complete data.

NOTE: Selection program VIA-VISA available at www.ptwizard.com.

Computer Drive Selection Program

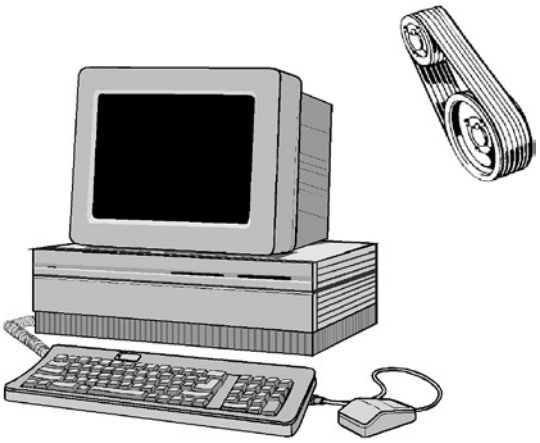

For any given set of drive conditions, there are many different drives that will satisfy the requirements. What is a “best drive”? It could be the drive with lowest initial cost, or the drive with the lowest bearing load, or the drive which minimizes the number of parts required.

Finding the best drive is a time-consuming and frustrating task for the design engineer. Manual drive selection, pricing, and organizing of data for analysis can be a long, drawn-out process, prone to errors and oversights. VIA-VISA Software handles such problems with ease and displays drive selection alternatives in an organized format that makes analysis a simple process.

Here’s what you get with VIA-VISA Software selection:

- Belt size, type, quantity, part number.
- Sheave sizes, part number.
- Bushing type, part number.
- Drive face width.
- Actual center distance.
- Installation force/deflection values for drive tensioning.
- Belt pull, dynamic shaft load for bearing and shafting calculations.
- Net price (if discount multipliers entered). Default to total list price.
- Belt speed in feet per minute.
- Calculated driven RPM
- Calculated actual service factor.

Ask your DODGE Sales Engineer for a demonstration and instruction on how you can obtain your personal VIA-VISA package.

NOTE: Selection program VIA-VISA available at www.ptwizard.com.

V-Drive Accessories

V-Belt Measuring Gage

This gage allows you to measure belts that may have lost their identification. This is easily done by slipping belt in “sheave” grooves and moving bottom sheave until belts is taut. Notched portion of bottom sheave indicates belt width. Belt length is then read opposite corresponding width on scale. Gage is made of aluminum and plastic – rust proof and durable.

Part No. 450966
Wt - 1 Lb.

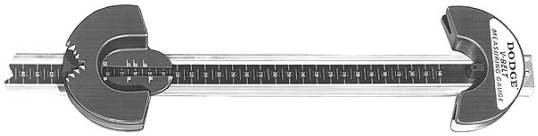

V-Belt Groove and Belt Gage

When V-belt sections or sheave groove need to be identified this set of molded plastic gages can be the handiest thing in your tool box. Includes 8 gages for grooves and 2 for belts covering Classical A thru E, A/B Combination grooves and Narrow 3V, 5V and 8V. They are pinned together so that the individual gages will not become lost.

Part No. 121294
Wt. - 0.12 Lb.

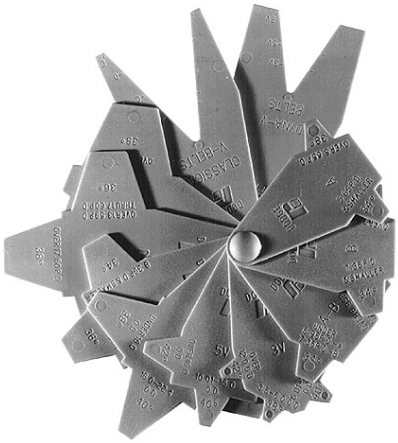

RELATED PRODUCTS

V-Drive Accessories

V-Belt Tension Tester

This convenient tool facilitates easy checking of belt tension on drives having two or more belts. Scales are provided for reading both the required force and the distance of belt deflection which are used in properly tensioning belts. Force range is 0 - 35 lbs.

Part No. 109082
Wt. - 0.5 Lb.

Precision Laser Alignment Device

Identifies common types of pulley misalignment.

Part No. 109993
Wt. - 30 Lb

Double Barrel Tension Tester

Maximum deflection force: 66 lbs. For use with all multiple V-belts and large synchronous belts.

Part No. 109991
Wt. - 0.5 Lb

NOTE: Selection program VIA-VISA available at www.ptwizard.com.

Five Barrel Tension Tester

Maximum deflection force: 165 lbs. For use with multiple V-belts and large synchronous belts.

Part No. 109992
Wt. - 1 Lb.

Sonic Tension Meter - Model 507C

The Sonic Tension Meter is an electronic device that measures the natural frequency of a free stationary belt span and instantly computes the static belt tensions based upon the belt span length, belt width, and belt type. The Sonic Tension Meter can accurately measure belt tensions for both synchronous and v-belts. Other features include:

- Output readings can be switched between pounds, kilograms, newtons and hertz
- Auto gain control automatically adjusts meter sensitivity
- Auto frequency range filters for background noise
- Frequency range from 10 - 5,000 Hz

Sonic Tension Meter - Model 507C (Comes with meter)	**Part No. 109994**	Wt. - 1.0 Lb.
★ Flexible Sensor	**Part No. 109995**	Wt. - 0.2 Lb.
Cord Sensor	**Part No. 109996**	Wt. - 0.2 Lb.
★ Inductive Sensor (magnets included)	**Part No. 109997**	Wt. - 0.2 Lb.

★ Optional accesories

INSTALLING/TENSIONING V-DRIVES
INSTALLING A DRIVE

Check Condition of Sheaves–Before a new set of V-belts are installed, check the condition of the sheaves. Dirty or rusty sheaves impair the drive's efficiency and abrade the belts, which result in premature failure.

Worn sheaves shorten belt life as much as 50%. If the grooves are worn to where the belt bottoms, slippage may result and burn the belts. If the sidewalls are "dished out," the bottom shoulder ruins the belts prematurely by wearing off the bottom corners.

Check Sheave Alignment–Sheave adjustment should be checked by placing a straight edge or tight cord across the sheave faces so that it touches all four points of contact. Ordinarily, a misalignment of more than one-half of one degree (one-eighth inch in one foot) will adversely affect belt life. Improper sheave alignment produces uneven wear on one side of the belt, causes the belt to roll over in the sheaves or throws all the load on one side of the belt, stretching or breaking the cords on that side.

INSTALLATION AND TAKE-UP ALLOWANCES

After calculating a center distance from a standard pitch length, make provision for adjusting the center distance as in sketch below, to allow for installation of the belts without injury, for tensioning, and for maintenance of proper tension throughout the life of the belt. (Refer to Tables 11 or 12 for values).

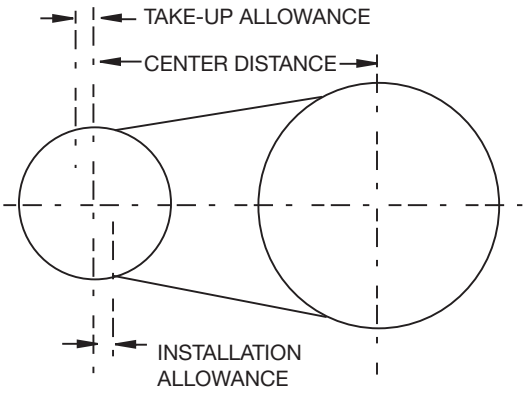

Placing Belts on Sheaves–Shorten the center distance of the drive until the belts can be put on the sheaves without forcing. Forcing the belts can cause internal injury to the belts.

Belt Selection–For maximum service, replace V-belt drives with a complete new matched set of belts or use the new Matchmaker belts.

Never employ a used belt as a replacement for a unit of a set. Used belts, normally, are worn in cross-section and stretched. A new belt so applied will ride higher in the sheave, travel faster and operate at a much higher tension than the used belts. The cord center may be ruptured, allowing the new belt to elongate. Shortly after this occurs it will cease to accept its full share of the load, leaving the drive under-belted. Thus, the new belt is wasted. Belts of different manufacturers should not be mixed for the same reasons.

Table 11 - Center Distance Allowance for Narrow Belt Installation and Take-Up

Nom. Belt Lgth. in Inches	Min. Installation Allowance (in inches) (Below Center)						Min. Take-up Allowance (Above Center)
	3V Dyna-V	3V Poly-band	5V Dyna-V	5V Poly-band	8V Dyna-V	8V Poly-band	
Up to & incl. 47.5	.05	1.2	...	...	...	...	1.0"
50-71	0.8	1.4	1.0	2.1	...	...	1.2
75-106	0.8	1.4	1.0	2.1	1.5	3.4	1.5
112-125	0.8	1.4	1.0	2.1	1.5	3.4	1.8
132-170	0.8	1.4	1.0	2.1	1.5	3.4	2.2
180-200	...	...	1.0	2.1	1.8	3.6	2.5
212-236	...	...	1.2	2.4	1.8	3.6	3.0
250 & 265	...	...	1.2	2.4	1.8	3.6	3.2
280 & 300	...	...	1.2	2.4	1.8	3.6	3.5
315-355	...	...	1.2	2.4	2.0	4.0	4.0
375	...	...	...	...	2.0	4.0	4.5
400-560	...	...	...	...	2.0	4.0	5.5

NOTE: Selection program VIA-VISA available at www.ptwizard.com.

TECHNICAL

INSTALLING/TENSIONING V-DRIVES

Table 12 - Center Distance Allowance for Classical Belt Installation and Take-Up

Nom. Belt Lgth. in Inches	Min. Installation Allowance (in inches) (Below Center)							Min. Take-up Allowance (Above Center)
	A	B	B Poly-band	C	C Poly-band	D	D Poly-band	
26-37	0.75	1.00	1.50	1.50	...	...	...	1.00”
38-59	0.75	1.00	1.50	1.50	2.00	...	...	1.50
60-89	0.75	1.25	1.61	1.50	2.00	...	...	2.00
90-119	1.00	1.25	1.61	1.50	2.00	...	...	2.50
120-157	1.00	1.25	1.81	1.50	2.11	2.0	2.00	3.00
158-194	...	1.25	1.81	2.00	2.20	2.00	3.00	3.50
195-239	...	1.50	1.81	2.00	2.31	2.00	3.20	4.00
240-269	...	1.50	2.00	2.00	2.50	2.50	3.20	4.50
270-329	...	1.50	2.20	2.00	2.50	2.50	3.50	5.00
330-419	...	...	...	2.00	2.70	2.50	3.60	6.00
420 & Over	...	...	...	2.50	2.90	3.00	4.10	1-1/2% of belt lgth.

TENSIONING A DRIVE
General Rules of Tensioning–

1. Ideal tension is the lowest tension at which the belt will not slip under peak load conditions.
2. Check tension frequently during the first 24-48 hours of run-in operation.
3. Over tensioning shortens belt and bearing life.
4. Keep belts free from foreign material which may cause slip.
5. Make V-Drive inspection on a periodic basis. Tension when slipping. Never apply belt dressing as this will damage the belt and cause early failure.

SIMPLE TENSIONING PROCEDURE

1. Measure the span length, K.
2. At the center of the span (K) apply a force (perpendicular to the span) large enough to deflect the 1/64, for every inch of span length. For example, one deflection of a 100 inch span would be 100/64 or 1-9/16 inches.

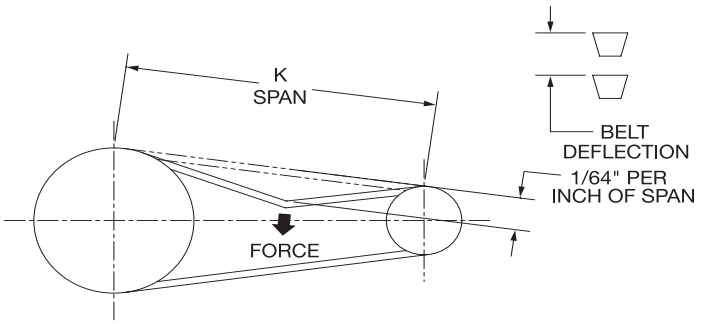

3. Compare the force you have applied with the values given in Tables 13 or 14. If the force is between the values for normal tension, and 1-1/2 times normal tension, the drive tension should be satisfactory. A force below the value for normal tension indicates an under-tensioned drive. If the force exceeds the value for 1-1/2 times normal tension, the drive is tighter than it needs to be.

For V-Belt Tension Testers, See Page PT7-142.

After the proper operating tension has been applied to the belts, a double-check should be made of the following:

a. Parallel position of the sheave shafts.
b. Correct alignment of sheave grooves.

NOTE: Selection program VIA-VISA available at www.ptwizard.com.

INSTALLING/TENSIONING V-DRIVES

Table 13 - Belt Deflection Force (Check Factory For Conditions Not Covered In This Table)

V-Belt Section	Small Sheave		Deflection Force In Lbs. For Drive Speed Ratio of:			
	Speed Range	Diameter	1.0	1.5	2.0	4.0 +
A (AP)	1800-3600	3.0	2.0	2.3	2.4	2.6
	1800-3600	4.0	2.6	2.8	3.0	3.3
	1800-3600	5.0	3.0	3.3	3.4	3.7
	1800-3600	7.0	3.5	3.7	3.8	4.3
B (BP)	1200-1800	4.6	3.7	4.3	4.5	5.0
	1200-1800	5.0	4.1	4.6	4.8	5.6
	1200-1800	6.0	4.8	5.3	5.5	6.3
	1200-1800	8.0	5.7	6.2	6.4	7.2
C (CP)	900-1800	7.0	6.5	7.0	8.0	9.0
	900-1800	9.0	8.0	9.0	10.0	11.0
	900-1800	12.0	10.0	11.0	12.0	13.0
	700-1500	16.0	12.0	13.0	13.0	14.0
D (DP)	900-1500	12.0	13.0	15.0	16.0	17.0
	900-1500	15.0	16.0	18.0	19.0	21.0
	700-1200	18.0	19.0	21.0	22.0	24.0
	700-1200	22.0	22.0	23.0	24.0	26.0
AX	1800-3600	3.0	2.5	2.8	3.0	3.3
	1800-3600	4.0	3.3	3.6	3.8	4.2
	1800-3600	5.0	3.7	4.1	4.3	4.6
	1800-3600	7.0	4.3	4.6	4.8	5.3
BX	1200-1800	4.6	5.2	5.8	6.0	6.9
	1200-1800	5.0	5.4	6.0	6.3	7.1
	1200-1800	6.0	6.0	6.4	6.7	7.7
	1200-1800	8.0	6.6	7.1	7.5	8.2
CX	900-1800	7.0	10.0	11.0	12.0	13.0
	900-1800	9.0	11.0	12.0	13.0	14.0
	900-1800	12.0	12.0	13.0	13.0	14.0
	700-1500	16.0	13.0	14.0	14.0	15.0
DX	900-1500	12.0	16.0	18.0	19.0	20.0
	900-1500	15.0	19.0	21.0	22.0	24.0
	700-1200	18.0	22.0	24.0	25.0	27.0
	700-1200	22.0	25.0	27.0	28.0	30.0

V-Belt Section	Small Sheave		Deflection Force in Lbs. for Drive Speed Ratio of:			
	Speed Range	Diameter	1.0	1.5	2.0	4.0+
3VX	1200–3600	2.2	2.2	2.5	2.7	3.0
	1200–3600	2.5	2.6	2.9	3.1	3.6
	1200–3600	3.0	3.1	3.5	3.7	4.2
	1200–3600	4.1	3.9	4.3	4.5	5.1
	1200–3600	5.3	4.6	4.9	5.1	5.7
	1200–3600	6.9	5.0	5.4	5.6	6.2
5VX	1200–3600	4.4	6.5	7.5	8.0	9.0
	1200–3600	5.2	8.0	9.0	9.5	10.0
	1200–3600	6.3	9.5	10.0	11.0	12.0
	1200–3600	7.1	10.0	11.0	12.0	13.0
	900–1800	9.0	12.0	13.0	14.0	15.0
	900–1800	14	14.0	15.0	16.0	17.0
8VX	900–1800	12.5	18.0	21.0	23.0	25.0
	900–1800	14.0	21.0	23.0	24.0	28.0
	700–1500	17.0	24.0	26.0	28.0	30.0
	700–1500	21.2	28.0	30.0	32.0	34.0
	400–1000	24.8	31.0	32.0	34.0	36.0
5V	900–1800	7.1	8.5	9.5	10.0	11.0
	900–1800	9.0	10.0	11.0	12.0	13.0
	900–1800	14	12.0	13.0	14.0	15.0
	700–1200	21.2	14.0	15.0	16.0	17.0
8V	900–1800	12.5	18.0	21.0	23.0	25.0
	900–1800	14.0	21.0	23.0	24.0	28.0
	700–1500	17.0	24.0	26.0	28.0	30.0
	700–1200	21.2	28.0	30.0	32.0	34.0
	400–1000	24.8	31.0	32.0		36.0

Notes: 1. Use approximately 130% of above values to tension a new set of belts
2. Use closest sheave diameter for sizes not shown.

NOTE: Selection program VIA-VISA available at www.ptwizard.com.

TECHNICAL

INSTALLING/TENSIONING V-DRIVES

Table 14 - POLYBAND Plus Belt Deflection Force (Lbs.) (Force is pounds for one belt only)

Cross Section	Small Sheave Diameter Range	RPM Range	Belt Deflection Force*	
			Normal	New Belt
5VF	7.1-10.9	200-700	21.1	30.9
		701-1250	18.0	26.3
		1251-1900	16.7	23.4
		1901-3000	15.8	23.0
5VF	11.8-16.0	200-700	26.8	39.5
		701-1250	23.5	34.7
		1251-2100	22.7	33.3
8VF	12.5-20.0	200-500	44.7	65.8
		501-850	38.5	56.6
		851-1150	35.2	51.6
		1151-1650	33.5	49.0
8VF	21.2-25.0	200-500	65.9	97.6
		501-850	61.2	90.6
		851-1200	57.0	84.3

* Multiply the force required for one belt by the number of belts in the Polyband Plus unit to get total force to apply.

Example: New 8VF drive with a small sheave dia. equal to 20".

The rpm of the sheave is 1000.

The belt to be installed is 8/8VF4000.

T otal deflection force = table value x 8 = 51.6 x 8 = 413 lbs.

Belt Pull and Bearing Loads

Belt Pull Calculations–The following method of calcu lating belt pull is found to be the most convenient and ac curate for drives operating at design loads and tensions:

$$T1 + T2 = 33{,}000\ (2.5\text{-}G)\left(\frac{HP}{GV}\right)$$

WHERE:

T1 = Tight side tension, pounds

T2 = Slack side tension, pounds

HP = Design horsepower

V = Belt speed, feet per minute = (PD) (RPM) (.262)

G = Arc of contact correction factor

D-d / C	Arc of Contact	Factor G	D-d / C	Arc of Contact	Factor G
.00	180°	1.00	.80	133°	.87
.10	174°	.99	.90	127°	.85
.20	169°	.97	1.00	120°	.82
.30	163°	.96	1.10	113°	.80
.40	157°	.94	1.20	106°	.77
.50	151°	.93	1.30	99°	.73
.60	145°	.91	1.40	91°	.70
.70	139°	.89	1.50	83°	.65

Arc of contact is on small sheave — d = Dia. of small sheve

D = Diam. of large sheave — C = Cener distance

NOTE: Selection program VIA-VISA available at www.ptwizard.com.

V-Belt Sheave Groove Dimensions

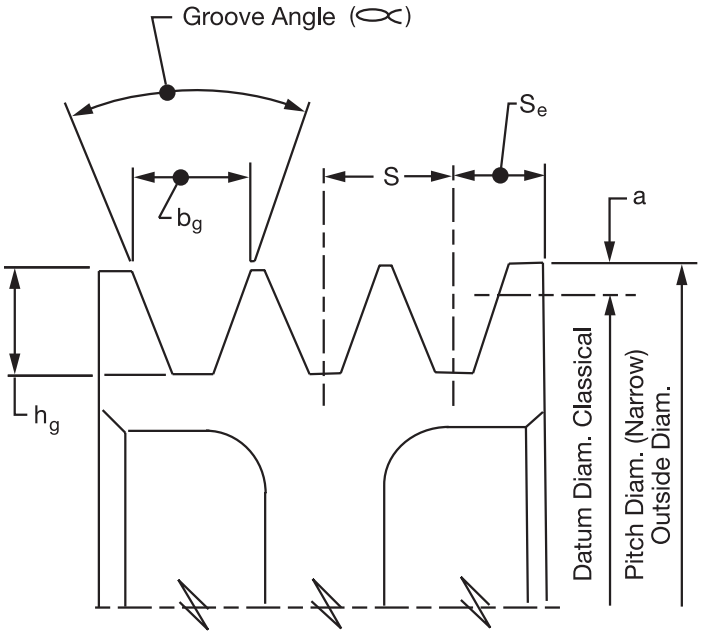

Narrow

Belt Section	Outside Diameter Range	∝∝ ± 0.25	bg ± .005	hg Min.	a	S ± .015	Se	
3VX, 3V	LESS THAN 3.50 . . . . . . 3.50 TO 6.00 . . . . . . 6.01 to 12.00 . . . . . . Over12.00	36° 38° 40° 42°	.350	0.340	0.025	0.406	0.344	+.094 -.000
5VX, 5V	Less than 10.00 . . . . . . 10.00 to 16.00 . . . . . . Over 16.00	38° 40° 42°	.600	0.590	.050	0.688	0.500	+.125 -.000
8VX, 8V	Less than 16.00 . . . . . . 16.00 to 22.40 . . . . . . Over 22.40	38° 40° 42°	1.000	0.990	.100	1.125	0.750	+.250 -.000

Classical

Belt Section	Pitch Diameter Min. Recom.	Pitch Diameter Range	m + 0.33	bg		hg Min.	2a ref *	S ± .025	Se	
AX, A	3.0	2.6 to 5.4 . . . . . Over 5.4	34° 38°	.494 .504	±.005	.460	.125	.625	.375	+.090 -.062
BX, B	5.4	4.6 to 7.0 . . . . . Over 7.0	34° 38°	.637 .650	±.006	.550	.175	.750	.500	+.120 -.065
A, B AX, BX	-	To 7.0 . . . . . . Over 7.0	34° 38°	.612 .625	±.006	.612	A (.634/.602) B (.333/.334)	.750	.500	+.120 -.065
CX, C	9.0	7.0 to 7.99 . . . . 8.0 to 12.0 . . . . Over 12.0	34° 36° 38°	.879 .887 .895	±.007	.750	.200	1.000	.688	+.160 -.070
DX,D	13.0	12.0 to 12.9 . . . 13.0 to 17.0 . . . Over 17.0	34° 36° 38°	1.259 1.271 1.283	±.008	1.020	.300	1.438	.875	+.220 -.080
E	21.0	18.0 to 24.0 . . . Over 24.0	36° 38°	1.527 1.542	±.010	1.300	.400	1.750	1.125	+.250 -.000

Note–For complete manufacturing tolerances – see RMA, MPTA, Narrow/Classical V-belt Standards.

* Datum diameter, not pitch diameter.

NOTE: Selection program VIA-VISA available at www.ptwizard.com.

ENGINEERING/TECHNICAL

More Power and Life From V-Drives

Trouble Area And Observation	Cause	Remedy
Belt Stretch Beyond Take-Up Belt stretch unequally.	Mis-aligned drive, unequal work done by belts.	Realign and re-tension drive.
All belts stretch about equally.	Belt tensile member broken from improper installation. Insufficient take-up allowance.	Replace all belts with new matched set properly installed. Check take-up and follow allowance on page .
	Greatly overloaded or underdesigned drive.	Redesign.
Short Belt Life Relatively rapid failure; no visible reason.	Tensile members damaged through improper installation. Worn sheave grooves (check with groove gauge)	Replace with all new matched set, properly installed. Replace sheaves.
	Under-designed drive.	Redesign.
Sidewalls soft and sticky. Low adhesion between cover plies. Cross-section swollen.	Oil or grease on belts or sheaves.	Remove source of oil or grease. Clean belts and grooves with cloth moistened with alcohol.
Sidewalls dry and hard. Low adhesion between cover plies. Bottom belt cracked.	High temperatures.	Remove source of heat. Ventilate drive better.
BELT TURN OVER 	Excess lateral belt whip. Foreign material in grooves. Mis-aligned sheaves. Worn sheave grooves (check with groove gauge). Tensile member broken through improper installation. Incorrectly placed flat idler pulley.	Use Banded belt. Remove material–shield drive. Realign the drive. Replace sheave. Replace with new matched set properly installed. Carefully align flat idler on slack side of drive as close as possible to driver sheave.
DETERIORATION OF RUBBER COMPOUNDS USED IN BELT	Belt dressing.	Never use dressing on V-belts. Clean with cloth moistened with alcohol. Tension drive properly to prevent slip.
Extreme cover wear.	Belts rub against belt guard or other obstruction.	Remove obstruction or align drive to give needed clearance.
Spin burns on belt.	Belts slip under starting or stalling load.	Tighten drive until slipping stops.
Bottom of belt cracked. Broken belts.	Too small sheaves. Object falling into or hitting drive.	Redesign for larger sheaves. Replace with new matched set of belts. Provide shield for drive.
IMPROPER DRIVEN SPEED Incorrect driveR-driveN ratio.	Design error.	Use correct sheave sizes.
Spin burns on belt.	Belt slip.	Re-tension drive until belt stops slipping.
BELT NOISE	Belt slip.	Re-tension drive until it stops slipping.
HOT BEARINGS		
Drive over-tensioned.	Worn grooves-belts bottoming and will not transmit power until over-tensioned. Improper tensioning.	Replace sheaves. Tension drive properly. Re-tension drive.
Sheaves too small.	Motor manufacturers sheave diameters not followed.	Redesign drive.
Poor bearing condition.	Underdesigned bearing or poor bearing maintenance.	Observe recommended bearing design and maintenance.
Sheaves out too far on shaft.	Error or obstruction problem.	Place sheaves as close as possible to bearings. Remove any obstruction preventing this.
Drive under-tensioned.	Belts slipping and causing heat build-up.	Re-tension drive.

NOTE: Selection program VIAVISA available at www.ptwizard.com.

CONTENTS

FHP Drives

Features / Benefits

Fixed Pitch Drives PT8-2

Variable Pitch Drives PT8-2

Selection/Dimensions

Light Duty Fixed Bore Sheaves PT8-3

Bushed FHP Sheave PT8-7

Adjustable Pitch VP Sheave PT8-9

Selection

Fixed Pitch FHP Drives PT8-10

Variable Pitch Drives PT8-15

Part Number Index INDEX-1

Keyword Index INDEX-43

FEATURES/BENEFITS

FHP Light Duty V-Drives

The Economical Option For Smaller Drives

- Fractional thru 10 HP at 1750 RPM
- One or Two Groove
- Fixed Pitched or Variable Pitch
- Use Standard Belts FHP:
  3L-4L-5L SL Classic:
  A or B Section Classic Cog: AX or BX

Variable Pitch Sheaves

- One and Two Grooves
- Selections Available up to 30HP, 1750 RPM
- Durable Cast Iron Construction
- Static Balance
- Driven Sheave Options:
  FHP Bored-to-Size
  FHP QT-Bushed
  Taper-Lock Dual Duty
  QD Combination Duty
- Belt Options Include FHP, Classical
- Adjustment Range 1.3:1 (Approx.)
- Positive Locking of Adjustment Setting
- New Easy Selection Procedure
- Applications Include: Conveyors, Pumps, Fans, Mixers, Ventilators, etc.

QT-Bushed Sheave

- Sizes AKQT, 2AKQT, BKQT, 2BKQT
- Durable Cast Iron Construction
- Industry Standard H-Style Bushing
- Interchangeable with QT and D Bushing
- Secure Clamp Fit to Shaft
- Bore Range 3/8 to 1-1/2”
- Integral Key Bushing Available in Select Bores
- Inch and Metric Bores
- Static Balance
- Suitable for Higher Capacity AX or BX Classic Cog Belts

Finish Bore Sheaves

- Sizes AK, 2AK, BK, 2BK
- Bored-to-Size
- Keyway and Setscrew
- Durable Cast Iron Construction
- Static Balance
- Stocked in Popular Sizes
- Not Recommended for Classic Cog Belts

NOTE: Selection tools available online at www.dodge-pt.com

SELECTION/DIMENSIONS

LIGHT DUTY FIXED BORE SHEAVES

AK (A & 3L - 4L V-BELTS)

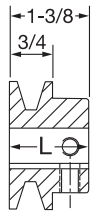

TYPE 1

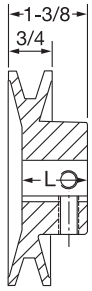

TYPE 2

A = Arms

B = Block

W = Web

- Finished Bore
- Keyway and (2) Setscrew
- Cast Iron, max speed 6500 FPM

Shaft Dia.	Keyseat
1/2	none
5/8 - 7/8"	3/16 X 3/32
15/16 - 1-1/4"	1/4 X 1/8
1-5/16 - 1-3/8"	5/16 X 5/32
1-7/16"	3/8 X 3/16

1 GROOVE

O.D.	Datum Dia.		SHV	Type	L	Bore/Part Number											Approx
	3L (0)	4L(A)	NO			1/2	5/8	3/4	7/8	15/16	1	1-1/8	1-3/16	1-1/4	1-3/8	1-7/16	Wgt
1.55	---	1.30	AK15 / MA15	1B	1.25	**121626**	**121627**										.40
1.75	---	1.50	AK17 / MA18	1B	1.38	**121631**	**121632**	**121633**									.40
2.00	1.41	1.75	AK20 / MA20	1B	1.38	**121636**	**121637**	**121638**									.70
2.10	1.51	1.85	AK21 / MA21	1B	1.38	**127100**	**127101**	**127102**									.70
2.20	1.61	1.95	AK22 / MA22	1B	1.38	**127436**	**127437**	**127438**									.80
2.30	1.71	2.05	AK23 / MA23	1B	1.38	**121642**	**121643**	**121644**	**121645**								.80
2.50	1.91	2.25	AK25 / MA25	2B	1.25	**121649**	**121650**	**121651**	**121652**								.90
2.60	2.01	2.35	AK26 / MA26	2B	1.25	**127103**	**127104**	**127105**									.90
2.70	2.11	2.45	AK27 / MA27	2B	1.25	**127107**	**121503**	**127108**									.90
2.80	2.21	2.55	AK28 / MA28	2B	1.25	**121655**	**121656**	**121657**	**121658**		**121659**						.90
3.05	2.46	2.80	AK30 / MA30	2B	1.25	**121662**	**121663**	**121664**	**121665**		**121666**						1.20
3.25	2.66	3.00	AK32 / MA33	2B	1.25	**121669**	**121670**	**121671**	**121672**		**121673**	**121674**					1.50
3.45	2.86	3.20	AK34 / MA35	2B	1.25	**121676**	**121677**	**121678**	**121679**		**121680**	**121681**					1.40
3.75	3.16	3.50	AK39 / MA38	2W	1.13	**121530**	**121531**	**121532**	**121533**	**127110**	**121534**	**121535**					1.50
3.95	3.36	3.70	AK41 / MA40	2W	1.13	**121536**	**121537**	**121538**	**121539**	**127111**	**121540**	**121541**					2.00
4.25	3.66	4.00	AK44 / MA43	2W	1.13	**121542**	**121543**	**121544**	**121545**	**127112**	**121546**	**121547**					2.00
4.45	3.86	4.20	AK46 / MA45	2W	1.13	**121548**	**121549**	**121550**	**121551**	**127113**	**121552**	**121553**					2.00
4.75	4.16	4.50	AK49 / MA48	1A	1.38	**121554**	**121555**	**121556**	**121557**	**127114**	**121558**	**121559**					2.00
4.95	4.36	4.70	AK51 / MA50	1A	1.38	**121560**	**121561**	**121562**	**121563**		**121564**	**121565**					2.00
5.25	4.66	5.00	AK54 / MA53	1A	1.38	**121566**	**121567**	**121568**	**121569**	**127115**	**121570**	**121571**	**121572**				2.50
5.45	4.86	5.20	AK56 / MA55	1A	1.38	**121573**	**121574**	**121575**	**121576**	**127116**	**121577**	**121578**	**121579**				2.50
5.75	5.16	5.50	AK59 / MA58	1A	1.38	**127117**	**127118**	**127119**	**127120**	**127121**	**127122**	**127123**	**127124**				2.50
5.95	5.36	5.70	AK61 / MA60	1A	1.38	**121580**	**121581**	**121582**	**121583**	**127125**	**121584**	**121585**	**121586**				3.00
6.25	5.66	6.00	AK64 / MA63	1A	1.38	**121587**	**121588**	**121589**	**121590**	**127126**	**121591**	**121592**	**121593**				3.00
6.45	5.86	6.20	AK66 / MA65	1A	1.38		**127209**	**121594**			**121595**	**127128**					3.00
6.75	6.16	6.50	AK69 / MA68	1A	1.38			**127129**			**127130**	**127131**					3.00
6.95	6.36	6.70	AK71 / MA70	1A	1.38		**127132**	**121596**			**121597**	**127133**					3.50
7.25	6.66	7.00	AK74 / MA73	1A	1.38	**121598**	**121599**	**121600**		**127134**	**121601**	**121602**	**127135**	**127136**		**127137**	3.50
7.75	7.16	7.50	AK79 / MA78	1A	1.38			**127138**			**127139**	**127140**				**127141**	3.50
8.25	7.66	8.00	AK84 / MA83	1A	1.38	**127142**	**121609**	**121610**		**127143**	**121611**		**121612**			**127144**	4.40
8.75	8.16	8.50	AK89 / MA88	1A	1.38			**127145**			**127146**	**127147**				**127148**	4.50
9.25	8.66	9.00	AK94 / MA93	1A	1.38	**127210**	**127211**	**121800**		**127212**	**127213**		**127214**	**121803**		**127215**	5.40
9.75	9.16	9.50	AK99 / MA98	1A	1.38			**127149**			**127150**					**127151**	5.50
10.25	9.66	10.00	AK104 / MA103	1A	1.38		**121809**	**121810**			**121811**		**127216**	**127217**	**127218**	**127219**	6.00
10.75	10.16	10.50	AK109 / MA108	1A	1.38			**127152**			**127153**				**127220**	**127154**	6.00
11.25	10.66	11.00	AK114 / MA113	1A	1.38			**127155**			**127156**		**127222**			**127223**	6.50
12.25	11.66	12.00	AK124 / MA123	1A	1.38		**121820**	**121821**			**121823**		**127224**	**127226**		**127227**	7.00
13.25	12.66	13.00	AK134 / MA133	1A	1.38			**121620**			**121621**		**121622**		**127106**	**127109**	8.50
14.25	13.66	14.00	AK144 / MA143	1A	1.38			**121623**			**121624**		**121628**			**121629**	9.00
15.25	14.66	15.00	AK154 / MA153	1A	1.38			**121634**			**121639**		**121640**		**127228**	**121646**	9.00
18.25	17.66	18.00	AK184 / MA183	1A	1.38			**121647**			**121653**		**121654**			**121660**	14.00

P.D. for "3L Belt = D.D. + .25" = O.D. -.34"
P.D. for "A" (4L) Belt = O.D.
DO NOT use 3L belts with AK15 and AK17 sheaves
Bore sizes marked X are available - POA

FEATURES/BENEFITS PAGE PT8-2	SELECTION/DIMENSIONS PAGE PT8-3	SELECTION PAGE PT8-10	

SELECTION/DIMENSIONS

LIGHT DUTY FIXED BORE SHEAVES

2AK (A V-BELTS)

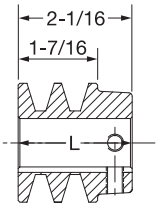

TYPE 3

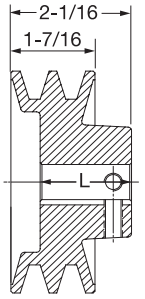

TYPE 4

A = Arms

B = Block

W = Web

- Finished Bore
- Keyway and (2) Setscrew
- Cast Iron, max speed 6500 FPM

Shaft Dia.	Keyseat
1/2	none
5/8 - 7/8"	3/16 X 3/32
15/16 - 1-1/4"	1/4 X 1/8
1-5/16 - 1-3/8"	5/16 X 5/32
1-7/16"	3/8 X 3/16

2 GROOVES

O.D	D.D. A Belt	SHV NO	Type	L	Bore/Part Number										Approx Wgt
					1/2	5/8	3/4	7/8	15/16	1	1-1/8	1-3/16	1-3/8	1-7/16	
2.00	1.75	2AK20 / 2MA20	3B	2.06	**121835**	**121836**	**121837**	**121838**							1.00
2.15	1.90	2AK21 / 2MA22	3B	2.06	**127158**	**127159**	**127160**								1.00
2.25	2.00	2AK22 / 2MA23	3B	2.06	**121839**	**121840**	**121841**	**121842**		**121843**					1.00
2.35	2.10	2AK23 / 2MA24	4B	1.88		**127161**	**127162**	**127163**		**127229**					1.00
2.55	2.30	2AK25 / 2MA25	4B	1.69	**121844**	**121845**	**121846**	**121847**		**121848**	**121849**				1.50
2.65	2.40	2AK26 / 2MA27	4B	1.88		**127164**	**127165**	**127166**							1.50
2.75	2.50	2AK27 / 2MA28	4B	1.69	**121850**	**121851**	**121852**	**121853**		**121854**	**121855**				1.50
2.85	2.60	2AK28 / 2MA29	4B	1.69		**127169**	**127170**	**127171**		**127172**					1.50
3.05	2.80	2AK30 / 2MA30	4B	1.69	**121856**	**121857**	**121858**	**121859**		**121860**	**121861**				2.00
3.25	3.00	2AK32 / 2MA33	4B	1.63	**121862**	**121863**	**121864**	**121865**		**121866**	**121867**				2.00
3.45	3.20	2AK34 / 2MA35	4B	1.63	**121868**	**121869**	**121870**	**121871**		**121872**	**121873**				2.50
3.75	3.50	2AK39 / 2MA38	4B	1.63	**121874**	**121875**	**121876**	**121877**		**121878**	**121879**				3.00
3.95	3.70	2AK41 / 2MA40	4W	1.56		**121959**	**121880**	**121881**		**121882**	**121883**				3.00
4.25	4.00	2AK44 / 2MA43	4W	1.56		**121884**	**121885**	**121886**		**121887**	**121888**				3.00
4.45	4.20	2AK46 / 2MA45	4W	1.69				**121891**		**121892**	**121893**				4.00
4.75	4.50	2AK49 / 2MA48	4W	1.56			**121895**	**121896**		**121897**	**127230**		**127231**		3.50
4.95	4.70	2AK51 / 2MA50	4W	1.56			**121899**	**121900**		**121901**	**127439**		**127232**		4.00
5.25	5.00	2AK54 / 2MA53	4W	1.56		**121902**	**121903**	**121904**		**121905**	**127233**		**127234**		4.00
5.45	5.20	2AK56 / 2MA55	4W	1.56		**121906**	**121907**			**121909**	**127440**		**127235**		5.00
5.75	5.50	2AK59 / 2MA58	4W	1.56						**121910**	**127236**		**127237**		5.00
5.95	5.70	2AK61 / 2MA60	4W	1.69			**121911**	**121912**		**121913**	**127238**		**127240**		6.00
6.25	6.00	2AK64 / 2MA63	4A	1.56			**121914**			**121916**	**127241**	**121917**	**127242**	**121918**	5.50
7.25	7.00	2AK74 / 2MA73	4A	1.56			**121919**			**121920**	**127243**	**121921**	**127244**	**121922**	6.00
8.25	8.00	2AK84 / 2MA83	4A	1.56			**121923**		**121924**	**121925**	**127245**	**121926**	**127246**	**121927**	8.00
9.25	9.00	2AK94 / 2MA93	4A	1.56			**121928**			**121930**	**127248**	**121931**	**127249**	**121932**	9.00
10.25	10.00	2AK104 / 2MA103	4A	1.56			**121933**		**121934**	**121935**				**121937**	10.00
11.25	11.00	2AK114 / 2MA113	4A	1.56						**121939**		**121940**	**127250**	**121941**	11.00
12.25	12.00	2AK124 / 2MA123	4A	1.59						**121943**		**121944**		**121945**	12.00
13.25	13.00	2AK134 / 2MA133	4A	1.59								**121947**		**121948**	14.00
14.25	14.00	2AK144 / 2MA143	4A	1.56						**121949**				**121951**	15.00
15.25	15.00	2AK154 / 2MA153	4A	1.56								**121953**		**121954**	17.00
18.25	18.00	2AK184 / 2MA183	4A	1.53								**121957**		**121958**	19.00

PD for "A" Belts = O.D.

Bore sizes marked X are available - POA

FEATURES/BENEFITS PAGE PT8-2	SELECTION/DIMENSIONS PAGE PT8-3	SELECTION PAGE PT8-10	

SELECTION/DIMENSIONS

LIGHT DUTY FIXED BORE SHEAVES

BK (A & 4L - B & 5L V-BELTS)

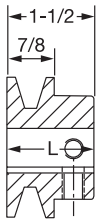

TYPE 5

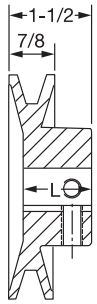

TYPE 6

A = Arms

B = Block

W = Web

- Finished Bore
- Keyway and (2) Setscrew
- Cast Iron, max speed 6500 FPM

Shaft Dia.	Keyseat
1/2	none
5/8 - 7/8"	3/16 X 3/32
15/16 - 1-1/4"	1/4 X 1/8
1-5/16 - 1-3/8"	5/16 X 5/32
1-7/16"	3/8 X 3/16

1 GROOVE

O.D.	Datum Dia.		SHV	Type	L	Bore/Part Number											Approx
	A (4L)	B (5L)	NO			1/2	5/8	3/4	7/8	15/16	1	1-1/8	1-3/16	1-1/4	1-3/8	1-7/16	Wgt
2.00	* 1.25	1.65	BK20 / MB20	5B	1.50	121682 *	121683 *	121684 *									.50
2.25	* 1.50	1.90	BK23 / MB23	6B	1.34	121685	121686	121687	121688		121689 *						1.00
2.40	1.65	2.05	BK24 / MB24	6B	1.50	127173	127174	127175									1.00
2.50	* 1.75	2.15	BK25 / MB25	5B	1.50	121691	121692	121693	121694		121695 *	*					1.00
2.60	1.85	2.25	BK26 / MB26	5B	1.50	127176	127177	127178	127179								1.00
2.70	1.95	2.35	BK27 / MB28	6B	1.38	121697	121698	121699	121700		121701						1.00
2.95	2.20	2.60	BK28 / MB30	6B	1.38	121706	121707	121708	121709		121710	121711					1.00
3.15	2.40	2.80	BK30 / MB31	6B	1.38	127180	127181	127182	127183								1.00
3.25	2.50	2.90	BK31 / MB33	6B	1.38	121714	121715	121716	121717		121718	121719					1.00
3.35	2.60	3.00	BK32 / MB34	6B	1.38	127184	127185	127186	127187								1.00
3.55	2.80	3.20	BK34 / MB35	6B	1.38	121722	121723	121724	121725		121726	121727					1.50
3.75	3.00	3.40	BK36 / MB38	6B	1.25	120850	120851	120852	120853		120854	120855					1.50
3.95	3.20	3.60	BK40 / MB40	6B	1.25	120856	120857	120858	120859		120860	120861					2.00
4.25	3.50	3.90	BK45 / MB43	6W	1.25	120862	120863	120864	120865		120866	120867					2.00
4.45	3.70	4.10	BK47 / MB45	6W	1.25	120874	120875	120876	120877		120878	127201					2.00
4.75	4.00	4.40	BK50 / MB48	5W	1.50	121010	121011	121012	121013	127206	121014	121015					2.50
4.95	4.20	4.60	BK52 / MB50	5W	1.50	120885	120886	120887	120888		120889	120890					2.50
5.25	4.50	4.90	BK55 / MB53	6W	1.31	120892	120893	120894	120895		120896	120897	127221				3.00
5.45	4.70	5.10	BK57 / MB55	5A	1.50		120899	120900	120901	127225	120902	120903					2.50
5.75	5.00	5.40	BK60 / MB58	5A	1.50	120910	120911	120912	120913		120914	120915	120916				2.50
5.95	5.20	5.60	BK62 / MB60	5A	1.50	120917	120918	120919	120920	127239	120921	120922	120923				2.50
6.25	5.50	5.90	BK65 / MB63	5A	1.50		120924	120925			120926	120927					3.00
6.45	5.70	6.10	BK67 / MB65	5A	1.50		120929	120930			120932	120933					3.00
6.75	6.00	6.40	BK70 / MB68	5A	1.50		120942	120943		127247	120945	120946	120947			120949	4.00
6.95	6.20	6.60	BK72 / MB70	5A	1.50			120950			120951	127301			127252		3.50
7.25	6.50	6.90	BK75 / MB73	5A	1.50			120952			120953	127302					3.50
7.45	6.70	7.10	BK77 / MB75	5A	1.50			127254			127255	127256			127257		4.00
7.75	7.00	7.40	BK80 / MB78	5A	1.50		120954	120955	120956		120957	120958	120959	120960	127303	120961	4.00
8.25	7.50	7.90	BK85 / MB83	5A	1.50			121661			121668	127304			127258	127259	4.50
8.75	8.00	8.40	BK90 / MB88	5A	1.50			127260	120962	127261	120963	120847	127262		127263	127264	5.00
9.25	8.50	8.90	BK95 / MB93	5A	1.50			127265			127266	127267			127268	127269	5.50
9.75	9.00	9.40	BK100 / MB98	5A	1.50			120972	120973	127270	120974	120975	120976	120977	127305	120978	6.00
10.25	9.50	9.90	BK105 / MB103	5A	1.50						127271				127272	127273	6.50
10.75	10.00	10.40	BK110 / MB108	5A	1.50			120980			120981	120848	120982		127274	127275	7.00
11.25	10.50	10.90	BK115 / MB113	5A	1.50						120985				127442	120989	8.00
11.75	11.00	11.40	BK120 / MB118	5A	1.50			120990			120991		120992		127443	120994	8.00
12.75	12.00	12.40	BK130 / MB128	5A	1.50			120995			120996	120997	120998	121000		121001	9.00
13.75	13.00	13.40	BK140 / MB138	5A	1.50			127276			127277	127157	127278			127279	10.00
15.75	15.00	15.40	BK160 / MB158	5A	1.50						121690	127280	121696	121833		121834	12.00
18.75	18.00	18.40	BK190 / MB188	5A	1.50								121521	121527		121528	14.00

P.D. for A (4L) Belts = Datum Dia. + .35 = O.D. -.40
P.D. for B (5L) Belts = O.D.
(*) DO NOT use "A" or "4L" belts with these specific bores
Bore sizes marked X are available - POA

FEATURES/BENEFITS PAGE PT8-2	SELECTION/DIMENSIONS PAGE PT8-3	SELECTION PAGE PT8-10	

SELECTION/DIMENSIONS

LIGHT DUTY FIXED BORE SHEAVES

2BK (A & B V-BELTS)

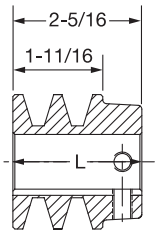

TYPE 7

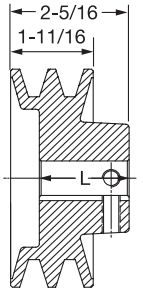

TYPE 8

- Finished Boe
- Keyway and (2) Setscrew
- Cast Iron, max speed 6500 FPM

A = Arms

B = Block

W = Web

Shaft Dia.	Keyseat
1/2	none
5/8 - 7/8”	3/16 X 3/32
15/16 - 1-1/4”	1/4 X 1/8
1-5/16 - 1-3/8”	5/16 X 5/32
1-7/16”	3/8 X 3/16

2 GROOVES

O.D	D.D. A(4L) Belt	D.D. B(5L) Belt	SHV NO	Type	L	Bore/Part Number									
						1/2	5/8	3/4	7/8	1	1-1/8	1-3/16	1-3/8	1-7/16	Wgt
2.50	* 1.90	2.30	2BK25 / 2MB25	7B	2.31	**121730**	**121731**	**121732**	**121733**	**121734 ***	*				1.50
1.70	2.10	2.50	2BK27 / 2MB28	8B	1.94	**121736**	**121737**	**121738**	**121739**	**121740**	**121741**				1.50
2.95	2.20	2.60	2BK28 / 2MB30	8B	1.94	**121742**	**121743**	**121744**	**121745**	**121746**	**121747**				2.00
3.15	2.40	2.80	2BK30 / 2MB32	8B	1.88	**127281**	**127282**	**127283**	**127284**	**127285**	**127286**				2.00
3.35	2.60	3.00	2BK32 / 2MB34	8B	1.94		**121748**	**121749**	**121750**	**121751**	**121752**				3.00
3.55	2.80	3.20	2BK34 / 2MB35	8B	1.88		**121753**	**121754**	**121755**	**121756**	**121757**				2.50
3.75	3.00	3.40	2BK36 / 2MB38	8B	1.88			**121759**	**121760**	**121761**	**121762**		**127287**		3.00
3.95	3.20	3.60	2BK40 / 2MB40	8B	1.69		**121763**	**121764**	**121765**	**121766**	**121767**		**121768**		3.00
4.25	3.50	3.90	2BK45 / 2MB43	8W	1.81					**121772**	**121773**		**121774**		4.00
4.45	3.70	4.10	2BK47 / 2MB45	8W	1.81				**121776**	**121777**	**121778**				4.00
4.75	4.00	4.40	2BK50 / 2MB48	8W	1.81			**121780**		**121782**	**121783**		**121784**		4.00
4.95	4.20	4.60	2BK52 / 2MB50	8W	1.69				**121786**	**121787**	**121788**		**121789**		4.50
5.25	4.50	4.90	2BK55 / 2MB53	8W	1.81						**121793**		**127288**		5.00
5.45	4.70	5.10	2BK57 / 2MB55	8W	1.81					**121796**	**121797**		**127289**		5.00
5.75	5.00	5.40	2BK60 / 2MB58	8W	1.81			**121798**	**121799**	**121960**	**121961**		**127290**		5.00
5.95	5.20	5.60	2BK62 / 2MB60	8W	1.81					**121963**	**121964**		**127291**		6.00
6.25	5.50	5.90	2BK65 / 2MB63	8A	1.81					**121966**	**121967**		**127292**		6.00
6.45	5.70	6.10	2BK67 / 2MB65	8A	1.69					**121969**	**121970**		**127293**		6.00
6.75	6.00	6.40	2BK70 / 2MB68	8A	1.81			**121971**		**121972**	**127294**	**121973**	**127295**	**121974**	6.00
7.75	7.00	7.40	2BK80 / 2MB78	8A	1.81			**121975**		**121977**	**127296**	**121978**	**127297**	**121979**	7.00
8.75	8.00	8.40	2BK90 / 2MB88	8A	1.81			**121980**		**121981**	**127298**	**121982**	**127299**	**121983**	8.00
9.75	9.00	9.40	2BK100 / 2MB98	8A	1.81			**121984**		**121986**		**121987**	**127300**	**121988**	10.00
10.75	10.00	10.40	2BK110 / 2MB108	8A	1.81					**121989**		**121990**		**121991**	13.00
11.75	11.00	11.40	2BK120 / 2MB118	8A	1.81					**121993**		**121994**		**121995**	10.00
12.75	12.00	12.40	2BK130 / 2MB128	8A	1.81					**121996**		**121997**		**121998**	15.00
13.75	13.00	13.40	2BK140 / 2MB138	8A	1.81					**121703**		**121704**		**121705**	17.00
15.75	15.00	15.40	2BK160 / 2MB158	8A	1.81					**121712**		**121713**		**121720**	18.00
18.75	18.00	18.40	2BK190 / 2MB188	8A	1.81							**121728**		**121729**	26.00

P.D. for A (4L) Belts = Datum Dia. + .35 = O.D. -.40
P.D. for B (5L) Belts = O.D.
(*) DO NOT use A belts with these specific bores
Bore sizes marked X are available - POA

SELECTION/DIMENSIONS

QT-Bushed Sheaves

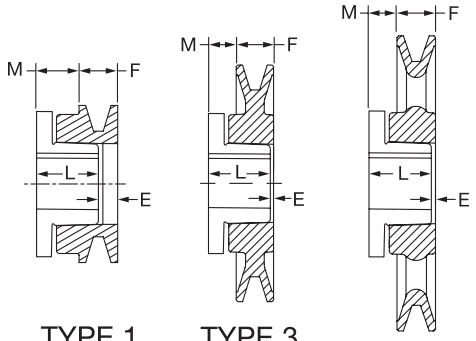

QT-Bushed Sheaves

- Sizes AKQT, 2AKQT, BKQT, 2BKQT
- Uses QT(L)-Style Bushing
- Secure Clamp Fit to Shaft
- Bore Range 3/8 to 1-1/2"
- Integral Key Bushing —Available in Select Bores
- Inch and Metric Bores
- Suitable for Higher Capacity AX or BX Classic Cog Belts

QT(L)-Bushings

Size	Part No.	Size	Part No.
Bore/Keyway		**Integral Key**	
QT x 3/8-NKS	**121129**	QT x 3/4-IK	**121162**
QT x 7/16-NKS	**121130**	QT x 7/8-IK	**121163**
QT x 1/2-KW	**121131**	QT x 1-IK	**121164**
QT x 9/16-KW	**121133**	QT x 1-1/8-IK	**121186**
QT x 5/8-KW	**122050**	QT x 1-3/16-IK	**121187**
QT x 11/16-KW	**121134**	**Metric**	
QT x 3/4-KW	**122051**	QT x 14MM-KW	**121148**
QT x 13/16-KW	**121136**	QT x 19MM-KW	**121149**
QT x 7/8-KW	**122052**	QT x 20MM-KW	**121467**
QT x 15/16-KW	**121138**	QT x 24MM-KW	**121150**
QT x 1-KW	**122053**	QT x 25MM-KW	**121151**
QT x 1-1/16-KW	**121140**	QT x 28MM-KW	**121152**
QT x 1-1/8-KW	**122054**	QT x 30MM-KW	**121153**
QT x 13/16-KW	**122055**	QT x 32MM-KW	**121154**
QT x 1-1/4-KW	**122056**	**Reborable**	
QT x 15/16-KW	**121144**	QT x 3/8-NKS	**120595**
QT x 1-3/8-KW	**121145**		
QT x 17/16-KW	**121146**		
QT x 1-1/2-KW	**121147**		

NOTE: INSTALLATION SCREW SIZE=1/4-20X7/8
TORQUE=55 LB-IN

AK (A & 3L - 4L V-BELTS)
1 GROOVE

O.D.	Datum Dia. 3L	Datum Dia. A (4L)	SHV NO	P/N	Type	Dimensions E	F	L	M	Approx Wgt
3.05	2.46	2.80	AK30QT / MAL30	**121017**	1B	0.38	0.75	1.69	0.97	1.15
3.25	2.66	3.00	AK32QT / MAL32	**121018**	1B	0.38	0.75	1.69	0.97	1.30
3.45	2.86	3.20	AK34QT / MAL34	**121019**	1B	0.09	0.75	1.69	0.69	1.20
3.75	3.16	3.50	AK39QT / MAL37	**121020**	1B	0.09	0.75	1.69	0.69	1.50
3.95	3.36	3.70	AK41QT / MAL39	**121021**	1B	0.09	0.75	1.69	0.69	1.75
4.25	3.66	4.00	AK44QT / MAL42	**121022**	1B	0.09	0.75	1.69	0.69	2.05
4.45	3.86	4.20	AK46QT / MAL44	**121023**	1B	0.09	0.75	1.69	0.69	2.25
4.75	4.16	4.50	AK49QT / MAL47	**121024**	3W	0.09	0.75	1.69	0.69	2.10
4.95	4.36	4.70	AK51QT / MAL49	**121025**	3W	0.09	0.75	1.69	0.69	2.35
5.25	4.66	5.00	AK54QT / MAL52	**121026**	3W	0.09	0.75	1.69	0.69	2.65
5.45	4.86	5.20	AK56QT / MAL54	**121027**	3W	0.09	0.75	1.69	0.69	2.75
5.75	5.16	5.50	AK59QT / MAL57	**121028**	5A	0.09	0.75	1.69	0.69	2.60
5.95	5.36	5.70	AK61QT / MAL59	**121029**	5A	0.09	0.75	1.69	0.69	2.50
6.25	5.66	6.00	AK64QT / MAL62	**121030**	5A	0.09	0.75	1.69	0.69	2.60
6.45	5.86	6.20	AK66QT / MAL64	**121031**	5A	0.09	0.75	1.69	0.69	2.70
6.75	6.16	6.50	AK69QT / MAL67	**121032**	5A	0.09	0.75	1.69	0.69	2.85
6.95	6.36	6.70	AK71QT / MAL69	**121033**	5A	0.09	0.75	1.69	0.69	2.90
7.25	6.66	7.00	AK74QT / MAL72	**121034**	5A	0.09	0.75	1.69	0.69	3.10
7.75	7.16	7.50	AK79QT / MAL77	**121035**	5A	0.09	0.75	1.69	0.69	3.35
8.25	7.66	8.00	AK84QT / MAL82	**121036**	5A	0.13	0.75	1.69	0.72	3.85
8.75	8.16	8.50	AK89QT / MAL87	**121037**	5A	0.09	0.75	1.69	0.69	4.10
9.25	8.66	9.00	AK94QT / MAL92	**121038**	5A	0.09	0.75	1.69	0.69	4.40
9.75	9.16	9.50	AK99QT / MAL97	**121039**	5A	0.09	0.75	1.69	0.69	4.60
10.25	9.66	10.00	AK104QT / MAL102	**121040**	5A	0.09	0.75	1.69	0.69	4.90
10.75	10.16	10.50	AK109QT / MAL107	**121041**	5A	0.09	0.75	1.69	0.69	5.20
11.25	10.66	11.00	AK114QT / MAL112	**121042**	5A	0.09	0.75	1.69	0.34	5.55
12.25	11.66	12.00	AK124QT / MAL122	**121043**	5A	0.09	0.75	1.69	0.69	5.90
13.25	12.66	13.00	AK134QT / MAL132	**121044**	5A	0.09	0.75	1.69	0.69	6.55
14.25	13.66	14.00	AK144QT / MAL142	**121045**	5A	0.09	0.75	1.69	0.69	7.30
15.25	14.66	15.00	AK154QT / MAL152	**121046**	5A	0.09	0.75	1.69	0.69	9.80
18.25	17.66	18.00	AK184QT / MAL182	**121529**	5A	0.09	0.75	1.69	0.69	9.95

P.D. for "3L Belt = D.D. + .25" = O.D. -.34"
P.D. for "A (4L)" is same as O.D

NOTE: See Bushing section for bores/part numbers of QT Bushings used with these Sheaves

2AK (A V-BELTS)
2 GROOVE

O.D.	D.D. A Belts	SHV NO	P/N	Type	Dimensions E	F	L	M	Approx Wgt
3.05	2.80	2AK30QT /2MAL30	**121048**	2B	1.00	1.38	1.34	.97	1.70
3.25	3.00	2AK32QT /2MAL32	**121049**	2B	1.00	1.38	1.34	.97	1.90
3.45	3.20	2AK34QT /2MAL34	**121050**	2B	.72	1.38	1.34	.69	1.90
3.75	3.50	2AK39QT /2MAL37	**121051**	2B	.72	1.38	1.34	.69	2.15
3.95	3.70	2AK41QT /2MAL39	**121052**	4B	.09	1.38	1.34	0.06	2.30
4.25	4.00	2AK44QT /2MAL42	**121053**	4B	.09	1.38	1.34	0.06	2.75
4.45	4.20	2AK46QT /2MAL44	**121054**	4W	.09	1.38	1.34	0.06	2.85
4.75	4.50	2AK49QT /2MAL47	**121055**	4W	.09	1.38	1.34	0.06	3.50
4.95	4.70	2AK51QT /2MAL49	**121056**	4W	.09	1.38	1.34	0.06	3.70
5.25	5.00	2AK54QT /2MAL52	**121057**	4W	.09	1.38	1.34	0.06	4.05
5.45	5.20	2AK56QT /2MAL54	**121058**	4W	.09	1.38	1.34	0.06	4.20
5.75	5.50	2AK59QT /2MAL57	**121059**	6A	.09	1.38	1.34	0.06	3.90
5.95	5.70	2AK61QT /2MAL59	**121060**	6A	.09	1.38	1.34	0.06	4.05
6.25	6.00	2AK64QT /2MAL62	**121061**	6A	.09	1.38	1.34	0.06	4.50
7.25	7.00	2AK74QT /2MAL72	**121062**	6A	.09	1.38	1.34	0.06	5.70
8.25	8.00	2AK84QT /2MAL82	**121063**	6A	.09	1.38	1.34	0.06	6.50
9.25	9.00	2AK94QT /2MAL92	**121064**	6A	.09	1.38	1.34	0.06	7.80
10.25	10.00	2AK104QT /2MAL102	**121065**	6A	.09	1.38	1.34	0.06	8.80
11.25	11.00	2AK114QT /2MAL112	**121066**	6A	.09	1.38	1.34	0.06	9.50
12.25	12.00	2AK124QT /2MAL122	**121067**	6A	.09	1.38	1.34	0.06	10.60
13.25	13.00	2AK134QT /2MAL132	**121068**	6A	.09	1.38	1.34	0.06	11.90
14.25	14.00	2AK144QT /2MAL142	**121069**	6A	.09	1.38	1.34	0.06	12.45
15.25	15.00	2AK154QT /2MAL152	**121070**	6A	.09	1.38	1.34	0.06	14.00
18.25	18.00	2AK184QT /2MAL182	**121008**	6A	.09	1.38	1.25	0.06	17.95

FEATURES/BENEFITS PAGE PT8-2 | SELECTION/DIMENSIONS PAGE PT8-3 | SELECTION PAGE PT8-10

SELECTION/DIMENSIONS

QT-Bushed Sheaves

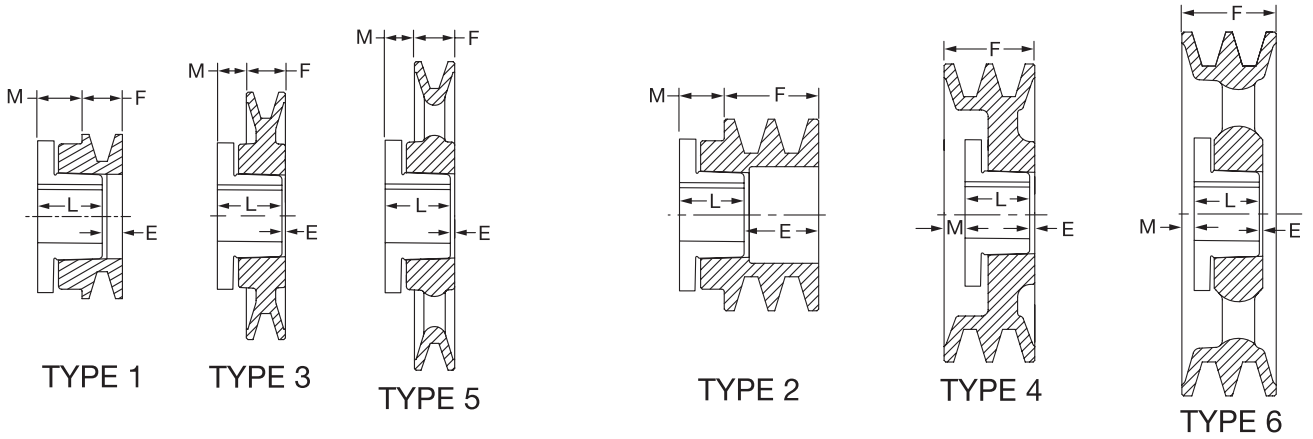

BK (A (3L) & B (4L) V-BELTS)
1 GROOVE

O.D.	Datum Dia.		SHV	P/N	Type	Dimensions				Approx
	3L	A (4L)	NO			E	F	L	M	Wgt
3.15	2.40	2.80	BK30QT / MBL31	**121072**	1B	.53	.91	1.34	.98	1.25
3.35	2.60	3.00	BK32QT / MBL33	**121073**	1B	.53	.91	1.34	.98	1.40
3.55	2.80	3.20	BK34QT / MBL35	**121074**	1B	.53	.91	1.34	.98	1.65
3.75	3.00	3.40	BK36QT / MBL37	**121075**	1B	.09	.91	1.34	.53	1.40
3.95	3.20	3.60	BK40QT / MBL39	**121076**	1B	.09	.91	1.34	.53	1.70
4.25	3.50	3.90	BK45QT / MBL42	**121077**	1B	.09	.91	1.34	.53	2.05
4.45	3.70	4.10	BK47QT / MBL44	**121078**	1B	.09	.91	1.34	.53	2.35
4.75	4.00	4.40	BK50QT / MBL47	**121079**	3W	.09	.91	1.34	.53	1.95
4.95	4.20	4.60	BK52QT / MBL49	**121080**	3W	.09	.91	1.34	.53	2.40
5.25	4.50	4.90	BK55QT / MBL52	**121081**	3W	.09	.91	1.34	.53	2.35
5.45	4.70	5.10	BK57QT / MBL54	**121082**	3W	.09	.91	1.34	.53	2.90
5.75	5.00	5.40	BK60QT / MBL57	**121083**	3W	.09	.91	1.34	.53	2.45
5.95	5.20	5.60	BK62QT / MBL59	**121084**	5A	.09	.91	1.34	.53	2.80
6.25	5.50	5.90	BK65QT / MBL62	**121085**	5A	.09	.91	1.34	.53	2.70
6.45	5.70	6.10	BK67QT / MBL64	**121086**	5A	.09	.91	1.34	.53	2.80
6.75	6.00	6.40	BK70QT / MBL67	**121087**	5A	.09	.91	1.34	.53	3.00
6.95	6.20	6.60	BK72QT / MBL69	**121088**	5A	.09	.91	1.34	.53	3.60
7.25	6.50	6.90	BK75QT / MBL72	**121089**	5A	.09	.91	1.34	.53	3.45
7.45	6.70	7.10	BK77QT / MBL74	**121090**	5A	.09	.91	1.34	.53	3.65
7.75	7.00	7.40	BK80QT / MBL77	**121091**	5A	.09	.91	1.34	.53	3.80
8.25	7.50	7.90	BK85QT / MBL82	**121092**	5A	.09	.91	1.34	.53	4.55
8.75	8.00	8.40	BK90QT / MBL87	**121093**	5A	.09	.91	1.34	.53	5.10
9.25	8.50	8.90	BK95QT / MBL92	**121094**	5A	.09	.91	1.34	.53	5.30
9.75	9.00	9.40	BK100QT / MBL97	**121095**	5A	.09	.91	1.34	.53	5.80
10.25	9.50	9.90	BK105QT / MBL102	**121096**	5A	.09	.91	1.34	.53	5.50
10.75	10.00	10.40	BK110QT / MBL107	**121097**	5A	.09	.91	1.34	.53	5.85
11.25	10.50	10.90	BK115QT / MBL112	**121098**	5A	.09	.91	1.34	.53	7.20
11.75	11.00	11.40	BK120QT / MBL117	**121099**	5A	.09	.91	1.34	.53	6.59
12.75	12.00	12.40	BK130QT / MBL127	**121100**	5A	.09	.91	1.34	.53	7.90
13.75	13.00	13.40	BK140QT / MBL137	**121101**	5A	.09	.91	1.34	.53	10.15
14.75	14.00	14.40	BK150QT / MBL147	**121102**	5A	.09	.91	1.34	.53	13.25
15.75	15.00	15.40	BK160QT / MBL157	**121103**	5A	.09	.91	1.34	.53	16.05
18.75	18.00	18.40	BK190QT / MBL187	**121009**	5A	.09	.91	1.34	.53	12.45

P.D. for "A (4L)" Belts = D.D. + .35" = O.D. -.40"
P.D. for "B (5L)" is same as O.D
NOTE: See Bushing section for bores/part numbers of QT Bushings used with these Sheaves

2BK (A & B V-BELTS)
2 GROOVE

O.D.	Datum Dia.		SHV	P/N	Type	Dimensions				Approx
	A	B	NO			E	F	L	M	Wgt
3.35	2.60	3.00	2BK32QT / 22MBL33	**121105**	2B	1.38	1.75	1.34	.97	2.35
3.55	2.80	3.20	2BK34QT / 2MBL35	**121106**	2B	1.38	1.75	1.34	.97	2.55
3.75	3.00	3.40	2BK36QT / 2MBL37	**121107**	2B	1.38	1.75	1.34	.97	3.00
3.95	3.20	3.60	2BK40QT / 2MBL39	**121108**	2B	.94	1.75	1.34	.53	2.80
4.25	3.50	3.90	2BK45QT / 2MBL42	**121109**	2B	.94	1.75	1.34	.53	3.25
4.45	3.70	4.10	2BK47QT / 2MBL44	**121110**	2B	.94	1.75	1.34	.53	3.35
4.75	4.00	4.40	2BK50QT / 2MBL47	**121111**	2B	.09	1.75	1.34	.31	3.85
4.95	4.20	4.60	2BK52QT / 2MBL49	**121112**	4W	.09	1.75	1.34	.31	4.00
5.25	4.50	4.90	2BK55QT / 2MBL52	**121113**	4W	.09	1.75	1.34	.31	4.40
5.45	4.70	5.10	2BK57QT / 2MBL54	**121114**	4W	.09	1.75	1.34	.31	4.95
5.75	5.00	5.40	2BK60QT / 2MBL57	**121115**	4W	.09	1.75	1.34	.31	5.30
5.95	5.20	5.60	2BK62QT / 2MBL59	**121116**	4W	.09	1.75	1.34	.31	5.80
6.25	5.50	5.90	2BK65QT / 2MBL62	**121117**	4W	.06	1.75	1.34	.34	5.40
6.45	5.70	6.10	2BK67QT / 2MBL64	**121118**	6A	.06	1.75	1.34	.34	5.85
6.75	6.00	6.40	2BK70QT / 2MBL67	**121119**	6A	.06	1.75	1.34	.34	5.55
6.95	6.20	6.60	2BK72QT / 2MBL69		6A	.06	1.75	1.34	.34	6.65
7.75	7.00	7.40	2BK80QT / 2MBL77	**121120**	6A	.06	1.75	1.34	.34	6.85
8.75	8.00	8.40	2BK90QT / 2MBL87	**121121**	6A	.06	1.75	1.34	.34	9.65
9.75	9.00	9.40	2BK100QT / 2MBL97	**121122**	6A	.06	1.75	1.34	.34	9.20
10.75	10.00	10.40	2BK110QT / 2MBL107	**121123**	6A	.06	1.75	1.34	.34	12.80
11.75	11.00	11.40	2BK120QT / 2MBL117	**121124**	6A	.06	1.75	1.34	.34	14.65
12.75	12.00	12.40	2BK130QT / 2MBL127	**121125**	6A	.06	1.75	1.34	.34	14.15
13.75	13.00	13.40	2BK140QT / 2MBL137	**121126**	6A	.06	1.75	1.34	.34	14.95
15.75	15.00	15.40	2BK160QT / 2MBL157	**121127**	6A	.06	1.75	1.34	.34	18.70
18.75	18.00	18.40	2BK190QT / 2MBL187	**121016**	6A	.06	1.75	1.34	.34	24.20

SELECTION/DIMENSIONS

Variable Pitch Sheaves

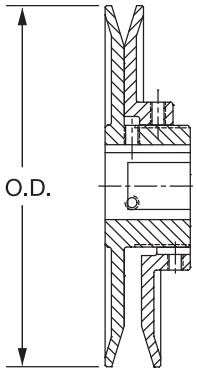

ONE GROOVE

SHV NO.	O.D.	Overall Length	WT LBS	Stock Bores 1/2	5/8	3/4	7/8	1	1-1/8	1-1/4	1-3/8	1-5/8	MAX BORE
1VP25	2.58	1.59	0.7	**127400**									0.75
1VP30	2.87	1.66	1.1	**121203**	**121207**	**127401**							0.75
1VP34	3.15	1.88	1.4	**121208**	**121209**	**121210**	**121211**						1.13
1VP40	3.75	1.88	1.9	**121212**	**121213**	**121214**	**121215**						1.13
1VP44	4.15	1.88	2.4	**121216**	**121217**	**121218**	**121219**	**121220**	**121221**				1.13
1VP50	4.75	1.88	3.6	**121222**	**121223**	**121224**	**121225**	**121226**	**121227**				1.13
1VP56	5.35	1.88	4.4	**121228**	**121229**	**121230**	**121231**	**121232**	**121233**				1.13
1VP60	6.00	1.66	6.5			**127402**	**127403**		**127404**				1.63
1VP62	5.95	1.91	6.7		**127405**	**121234**	**121235**	**121236**	**121237**	**121239**	**121240**		1.63
1VP65	6.50	1.66	6.8			**127406**	**127407**		**127441**				1.63
1VP68	6.55	1.91	7.3		**127408**	**121241**	**121242**	**121243**	**121244**	**121246**	**121247**		1.63
1VP71	7.10	1.66	8.5			**127409**	**127410**		**127411**				1.63
1VP75	7.50	1.66	9.2			**121248**	**121249**		**121251**				1.63

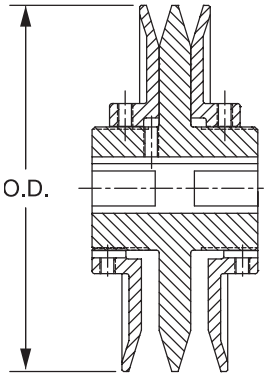

TWO GROOVE

SHV NO.	O.D.	Overall Length	WT LBS	Stock Bores 1/2	5/8	3/4	7/8	1	1-1/8	1-1/4	1-3/8	1-5/8	MAX BORE
2VP36	3.35	3.00	3.4	**127412**	**127413**	**127414**	**127415**	**127416**					1.13
2VP42	3.95	3.00	4.4		**127417**	**127418**	**127419**	**127420**	**127421**				1.13
2VP50	4.75	3.00	6.3		**121266**	**121267**	**121268**	**121269**	**121270**				1.13
2VP56	5.35	3.00	7.8		**121271**	**121272**	**121273**	**121274**	**121275**				1.63
2VP60	6.00	3.25	10.6			**127431**	**127432**		**127434**		**127435**	**127444**	1.63
2VP62	5.95	3.00	11.0			**121276**	**121277**	**121278**	**121279**	**127422**	**121295**		1.63
2VP65	6.50	3.25	12.3			**127423**	**127424**		**127425**		**127426**	**127445**	1.63
2VP68	6.55	3.00	12.7				**121281**	**121282**	**121283**	**121285**	**121286**		1.63
2VP71	7.10	3.25	14.6			**127427**	**127428**		**127429**		**127430**	**127446**	1.63
2VP75	7.50	3.25	16.5			**121287**	**121288**		**121290**		**121293**	**127447**	1.63

Bore	Keyseat
1/2	None
5/8 to 7/8	3/16 x 3/32
15/16 to 1-1/4	1/4 x 1/8
1-5/16 - 1-3/8	5/16 x 5/32

FEATURES/BENEFITS PAGE PT8-2	SELECTION/DIMENSIONS PAGE PT8-3	SELECTION PAGE PT8-10	

SELECTION

FHP Fixed Speed Drives

PROCEDURE

1. Calculate the Drive Ratio: DriveR RPM divided by DriveN RPM.

2. Calculate the Design Horsepower: Multiply motor HP by the "combined Correction Factor" listed below. If the exact type of machine is not listed, use the one that most nearly matches the application.

3. Select DriveR Sheave: In the HP Rating Tables, scan the RPM column for the HP rating that is equal to or greater than the Design HP calculated in Step 2. The DriveR sheave size is listed in the left-hand column. Normally the smallest diameter sheave alternative that covers the Design HP will result in the most economical drive.

4. Select the DriveN Sheave: Refer to the appropriate "Ratio Table". Choose the DriveN Sheave at the intersection of the calculated ratio and the DriveR Sheave.

5. Select Belt Length: Add DriveR and DriveN sheave diameters. Locate this number on the top row of the Center Distance Table. Trace down to the desired center distance in this column. The appropriate belt length will be listed in the left hand column. Belt length is indicated by the belt nomenclature: e.g., 4L350 is 35.0" long, 5L530 is 53.0" long, B36 is 36" long, etc.

NOTE: This procedure will provide approximate center distance. For more accurate results, refer to the "Non-Standard Drive Selection Procedure" for S-L Classic V-Drives.

6. Two Belt Drives: If the Design Horsepower is greater than the belt listed belt rating, divide the DHP by two, and proceed as though it were a single belt drive. CAUTION: FHP belts are not matched, and are therefore not normally recommended for two-belt drives. A, B, AX, or BX belts are matched and may be substituted. Also, these classical belts may have a significantly higher HP rating, which could allow for a more economical single belt drive.

Driven Machine	Speed Ratio	
	Under 1.5	1.5 and Over
Fans & Blowers	1.0	0.9
Domestic Laundry Mach.	1.1	1.0
Centrifugal Pumps	1.1	1.0
Generators	1.2	1.1
Rotary Compressors	1.3	1.1
Machine Tools	1.3	1.2
Reciprocating Pumps	1.4	1.3
Recip. Compressors	1.4	1.3
Woodworking Machy.	1.4	1.3

Horsepower Ratings

Small Shv.	Belt Horsepower Rating for RPM of Faster Shaft **											
O.D.	1160	1750	3450	1000	1500	2000	2500	3000	3500	4000	4500	5000
1.50	0.07	0.09	0.11	0.07	0.09	0.10	0.11	0.11	0.11	0.11	0.10	0.09
1.75	0.13	0.17	0.25	0.12	0.15	0.19	0.21	0.23	0.25	0.26	0.26	0.26
2.00	0.18	0.25	0.38	0.16	0.22	0.27	0.31	0.35	0.38	0.40	0.42	0.42
2.25	0.23	0.32	0.50	0.21	0.29	0.35	0.41	0.46	0.50	0.54	0.56	0.57
2.50	0.28	0.39	0.62	0.25	0.35	0.43	0.51	0.57	0.62	0.66	0.68	0.69
2.75	0.34	0.46	0.73	0.30	0.41	0.51	0.60	0.68	0.74	0.78	0.80	0.80
3.00	0.39	0.54	0.83	0.34	0.47	0.59	0.69	0.78	0.84	0.88	0.90	0.89

**Synchronous belt drives are suggested for lower RPM's.

(continued next page)

SELECTION

Horsepower Ratings

4L, A, AX Section Belts

Small Shv. O.D.	Belt Section	Belt Horsepower Rating for RPM of Faster Shaft **											
		1160	1750	3450	1000	1500	2000	2500	3000	3500	4000	4500	5000
2.00*	4L	0.12	0.12	0.02	0.11	0.12	0.11	0.09	0.06	0.02	-	-	-
	A	-	-	-	-	-	-	-	-	-	-	-	-
	AX	-	1.24	1.40	-	-	1.30	1.38	1.42	1.40	1.35	1.25	1.08
2.25*	4L	0.23	0.28	0.30	0.21	0.26	0.30	0.31	0.31	0.30	0.27	0.22	0.15
	A	-	1.17	1.60	-	-	1.26	1.40	1.52	1.60	1.64	1.65	1.62
	AX	-	1.58	1.98	-	1.23	1.68	1.83	1.94	1.98	1.98	1.92	1.82
2.50	4L	0.34	0.44	0.57	0.31	0.40	0.47	0.53	0.56	0.57	0.56	0.54	0.47
	A	-	1.55	2.26	-	1.40	1.60	1.91	2.11	2.31	2.42	2.50	2.48
	AX	-	2.05	2.73	-	1.87	2.19	2.52	2.69	2.74	2.83	2.85	2.83
2.75	4L	0.45	0.60	0.83	0.41	0.54	0.65	0.73	0.79	0.83	0.83	0.81	0.78
	A	-	1.92	2.61	-	1.74	2.21	2.39	2.68	2.89	3.03	3.12	3.18
	AX	-	2.50	3.53	-	2.31	2.72	3.13	3.40	3.57	3.70	3.84	3.91
3.00	4L	0.56	0.75	1.07	0.50	0.67	0.82	0.94	1.02	1.07	1.09	1.07	1.01
	A	1.68	2.23	3.34	-	1.97	2.42	2.78	3.09	3.41	3.52	3.64	3.67
	AX	2.22	2.90	4.14	-	2.63	3.14	3.58	3.89	4.01	4.40	4.59	4.71
3.25	4L	0.67	0.90	1.30	0.60	0.81	0.99	1.13	1.24	1.31	1.33	1.30	1.23
	A	1.97	2.61	3.79	-	2.37	2.85	3.24	3.57	3.78	3.95	4.08	4.11
	AX	2.45	3.25	4.81	-	2.88	3.57	3.94	4.41	4.78	5.12	5.31	5.47
3.5	4L	0.77	1.05	1.52	0.69	0.94	1.15	1.32	1.45	1.53	1.55	1.51	1.41
	A	2.32	3.13	4.66	2.07	2.81	3.42	3.93	4.35	4.65	4.84	4.90	4.83
	AX	2.79	3.68	5.68	2.51	3.31	4.01	4.61	5.19	5.64	6.08	6.37	6.54
3.75	4L	0.86	1.20	1.73	0.78	1.07	1.31	1.51	1.65	1.73	1.75	1.69	1.55
	A	2.63	3.58	5.35	-	3.17	3.90	4.51	4.98	5.31	5.56	5.67	5.63
	AX	3.05	4.06	6.43	-	3.66	4.44	5.20	5.87	6.41	6.87	7.09	7.40
4.00	4L	0.98	1.34	1.92	0.87	1.20	1.47	1.69	1.84	1.92	1.92	1.84	1.65
	A	2.94	4.01	6.02	2.62	3.58	4.40	4.10	5.64	6.04	6.29	6.37	6.28
	AX	3.34	4.46	7.14	3.00	3.95	4.93	5.78	6.52	7.13	7.64	7.98	8.19

5L, B, BX Section Belts

Small Shv. O.D.	Belt Section	Belt Horsepower Rating for RPM of Faster Shaft **											
		1160	1750	3450	1000	1500	2000	2500	3000	3500	4000	4500	5000
3.00*	5L	0.28	0.27	-	0.27	0.28	0.24	0.16	0.04	-	-	-	-
	B	1.35	1.58	1.28	-	1.51	1.62	1.61	1.50	1.27	0.95	0.45	-
	BX	2.90	3.72	5.16	-	3.38	4.02	4.51	4.90	5.15	5.31	5.33	5.25
3.25*	5L	0.46	0.52	0.28	0.43	0.50	1.52	0.49	0.41	0.26	0.04	-	-
	B	1.72	2.03	2.00	-	1.89	2.18	2.22	2.17	1.98	1.75	1.25	0.75
	BX	3.29	4.20	5.92	-	3.81	4.50	5.15	5.59	5.85	6.12	6.18	6.15
3.50	5L	0.63	0.77	0.65	0.58	0.72	0.80	0.82	0.76	0.63	0.42	0.12	-
	B	2.20	2.67	3.05	1.80	2.45	2.80	3.05	3.12	3.14	3.84	2.36	1.82
	BX	3.76	4.77	6.87	2.87	4.37	5.20	5.91	6.51	6.92	7.15	7.26	7.16
3.75	5L	0.81	1.01	1.00	0.74	0.94	1.07	1.13	1.10	0.99	0.77	0.44	-
	B	2.61	3.31	4.01	2.33	2.98	3.52	3.87	4.02	4.03	3.81	3.38	2.75
	BX	4.22	5.45	7.85	3.70	4.83	5.87	6.60	7.40	7.92	8.12	8.35	8.20
4.00	5L	0.98	1.25	1.33	0.89	1.15	1.33	1.43	1.43	1.31	1.08	0.71	0.19
	B	3.00	3.77	4.70	2.66	3.40	4.04	4.45	4.68	4.70	4.43	4.03	3.39
	BX	4.58	5.93	8.57	4.02	5.32	6.46	7.35	8.07	8.53	8.88	8.97	8.92
4.25	5L	1.15	1.49	1.63	1.04	1.36	1.59	1.72	1.73	1.62	1.35	0.93	0.33
	B	3.35	4.19	5.32	2.95	3.81	4.53	5.05	5.31	5.35	5.18	5.65	3.95
	BX	4.98	6.39	9.23	4.42	5.74	7.06	7.91	8.71	9.19	9.61	9.60	9.58
4.50	5L	1.32	1.72	1.91	1.19	1.57	1.84	2.00	2.02	1.89	1.59	1.10	0.39
	B	3.81	4.87	5.31	3.81	4.41	5.26	5.73	6.12	6.23	5.98	5.41	4.52
	BX	5.37	6.99	10.12	4.71	6.28	7.61	8.66	9.52	10.12	10.52	10.62	10.45
4.75	5L	1.49	1.95	2.16	1.34	1.77	2.09	2.27	2.29	2.14	1.79	1.21	0.38
	B	4.38	5.61	7.00	3.82	5.14	6.01	6.70	7.01	7.00	6.71	6.04	5.04
	BX	5.80	7.54	12.02	5.06	6.82	8.20	9.51	10.50	11.41	11.75	11.90	11.46
5.00	5L	1.66	2.17	2.39	1.49	1.98	2.33	2.53	2.55	2.36	1.94	1.26	0.28
	B	4.75	6.16	7.69	4.21	5.57	6.65	7.35	7.74	7.69	7.25	6.54	-
	BX	6.15	8.08	12.28	5.38	7.29	8.90	10.59	11.47	12.30	12.73	12.76	-

NOTES: * These sizes are below min. recommended diameter

** Synchronous belt drives are suggested for lower RPM's.

FEATURES/BENEFITS PAGE PT8-2	SELECTION/DIMENSIONS PAGE PT8-3	SELECTION PAGE PT8-10	

SELECTION

Ratio Table

AK, 2AK, AKQT, 2AKQT Sheave SERIES																		
Driven Shv.	Driver Sheave																	
	AK20	AK21	AK22	AK23	AK25	AK26	AK27	AK28	AK30	AK32	AK34	AK39	AK41	AK44	AK46	AK49	AK51	AK54
AK20	1.00	0.95	0.90	0.86	0.78	0.75	0.72	0.69	0.64	0.60	0.56	0.51	0.49	0.45	0.43	0.40	0.38	0.36
AK21	1.06	1.00	0.95	0.90	0.83	0.79	0.76	0.73	0.68	0.63	0.59	0.54	0.51	0.48	0.45	0.42	0.40	0.38
AK22	1.11	1.05	1.00	0.95	0.87	0.83	0.80	0.77	0.71	0.67	0.63	0.57	0.54	0.50	0.48	0.44	0.43	0.40
AK23	1.17	1.11	1.05	1.00	0.91	0.88	0.84	0.81	0.75	0.70	0.66	0.60	0.57	0.53	0.50	0.47	0.45	0.42
AK25	1.28	1.21	1.15	1.10	1.00	0.96	0.92	0.88	0.82	0.77	0.72	0.66	0.62	0.58	0.55	0.51	0.49	0.46
AK26	1.33	1.26	1.20	1.14	1.04	1.00	0.96	0.92	0.86	0.80	0.75	0.69	0.65	0.60	0.57	0.53	0.51	0.48
AK27	1.39	1.32	1.25	1.19	1.09	1.04	1.00	0.96	0.89	0.83	0.78	0.71	0.68	0.63	0.60	0.56	0.53	0.50
AK28	1.44	1.37	1.30	1.24	1.13	1.08	1.04	1.00	0.93	0.87	0.81	0.74	0.70	0.65	0.62	0.58	0.55	0.52
AK30	1.56	1.47	1.40	1.33	1.22	1.17	1.12	1.08	1.00	0.93	0.88	0.80	0.76	0.70	0.67	0.62	0.60	0.56
AK32	1.67	1.58	1.50	1.43	1.30	1.25	1.20	1.15	1.07	1.00	0.94	0.86	0.81	0.75	0.71	0.67	0.64	0.60
AK34	1.78	1.68	1.60	1.52	1.39	1.33	1.28	1.23	1.14	1.07	1.00	0.91	0.86	0.80	0.76	0.71	0.68	0.64
AK39	1.94	1.84	1.75	1.67	1.52	1.46	1.40	1.35	1.25	1.17	1.09	1.00	0.95	0.88	0.83	0.78	0.74	0.70
AK41	2.06	1.95	1.85	1.76	1.61	1.54	1.48	1.42	1.32	1.23	1.16	1.06	1.00	0.93	0.88	0.82	0.79	0.74
AK44	2.22	2.11	2.00	1.90	1.74	1.67	1.60	1.54	1.43	1.33	1.25	1.14	1.08	1.00	0.95	0.89	0.85	0.80
AK46	2.33	2.21	2.10	2.00	1.83	1.75	1.68	1.62	1.50	1.40	1.31	1.20	1.14	1.05	1.00	0.93	0.89	0.84
AK49	2.50	2.37	2.25	2.14	1.96	1.88	1.80	1.73	1.61	1.50	1.41	1.29	1.22	1.13	1.07	1.00	0.96	0.90
AK51	2.61	2.47	2.35	2.24	2.04	1.96	1.88	1.81	1.68	1.57	1.47	1.34	1.27	1.18	1.12	1.04	1.00	0.94
AK54	2.72	2.58	2.45	2.33	2.13	2.04	1.96	1.88	1.75	1.63	1.53	1.40	1.32	1.23	1.17	1.09	1.04	0.98
AK56	2.89	2.74	2.60	2.48	2.26	2.17	2.08	2.00	1.86	1.73	1.63	1.49	1.41	1.30	1.24	1.16	1.11	1.04
AK59	3.06	2.89	2.75	2.62	2.39	2.29	2.20	2.12	1.96	1.83	1.72	1.57	1.49	1.38	1.31	1.22	1.17	1.10
AK61	3.17	3.00	2.85	2.71	2.48	2.37	2.28	2.19	2.04	1.90	1.78	1.63	1.54	1.43	1.36	1.27	1.21	1.14
AK64	3.33	3.16	3.00	2.86	2.61	2.50	2.40	2.31	2.14	2.00	1.88	1.71	1.62	1.50	1.43	1.33	1.28	1.20
AK66	3.44	3.26	3.10	2.95	2.70	2.58	2.48	2.38	2.21	2.07	1.94	1.77	1.68	1.55	1.48	1.38	1.32	1.24
AK69	3.61	3.42	3.25	3.10	2.83	2.71	2.60	2.50	2.32	2.17	2.03	1.86	1.76	1.63	1.55	1.44	1.38	1.30
AK71	3.72	3.53	3.35	3.19	2.91	2.79	2.68	2.58	2.39	2.23	2.09	1.91	1.81	1.68	1.60	1.49	1.43	1.34
AK74	3.89	3.68	3.50	3.33	3.04	2.92	2.80	2.69	2.50	2.33	2.19	2.00	1.89	1.75	1.67	1.56	1.49	1.40
AK79	4.17	3.95	3.75	3.57	3.26	3.13	3.00	2.88	2.68	2.50	2.34	2.14	2.03	1.88	1.79	1.67	1.60	1.50
AK84	4.44	4.21	4.00	3.81	3.48	3.33	3.20	3.08	2.86	2.67	2.50	2.29	2.16	2.00	1.90	1.78	1.70	1.60
AK89	4.72	4.47	4.25	4.05	3.70	3.54	3.40	3.27	3.04	2.83	2.66	2.43	2.30	2.13	2.02	1.89	1.81	1.70
AK94	5.00	4.74	4.50	4.29	3.91	3.75	3.60	3.46	3.21	3.00	2.81	2.57	2.43	2.25	2.14	2.00	1.91	1.80
AK99	5.28	5.00	4.75	4.52	4.13	3.96	3.80	3.65	3.39	3.17	2.97	2.71	2.57	2.38	2.26	2.11	2.02	1.90
AK104	5.56	5.26	5.00	4.76	4.35	4.17	4.00	3.85	3.57	3.33	3.13	2.86	2.70	2.50	2.38	2.22	2.13	2.00
AK109	5.89	5.58	5.30	5.05	4.61	4.42	4.24	4.08	3.79	3.53	3.31	3.03	2.86	2.65	2.52	2.36	2.26	2.12
AK114	6.11	5.79	5.50	5.24	4.78	4.58	4.40	4.23	3.93	3.67	3.44	3.14	2.97	2.75	2.62	2.44	2.34	2.20
AK124	6.67	6.32	6.00	5.71	5.22	5.00	4.80	4.62	4.29	4.00	3.75	3.43	3.24	3.00	2.86	2.67	2.55	2.40
AK134	7.22	6.84	6.50	6.19	5.65	5.42	5.20	5.00	4.64	4.33	4.06	3.71	3.51	3.25	3.10	2.89	2.77	2.60
AK144	7.78	7.37	7.00	6.67	6.09	5.83	5.60	5.38	5.00	4.67	4.38	4.00	3.78	3.50	3.33	3.11	2.98	2.80
AK154	8.33	7.89	7.50	7.14	6.52	6.25	6.00	5.77	5.36	5.00	4.69	4.29	4.05	3.75	3.57	3.33	3.19	3.00
AK184	10.0	9.47	9.00	8.57	7.83	7.50	7.20	6.92	6.43	6.00	5.63	5.14	4.86	4.50	4.29	4.00	3.83	3.60

SELECTION

Ratio Table

BK, 2BK, BKQT, 2BKQT SERIES																					
Driven Shv.	Driver Sheave																				
	BK23	BK24	BK25	BK26	BK27	BK28	BK30	BK31	BK32	BK34	BK36	BK40	BK45	BK47	BK50	BK52	BK55	BK57	BK60	BK62	BK65
BK23	1.00	0.95	0.91	0.88	0.84	0.81	0.75	0.72	0.70	0.66	0.62	0.58	0.54	0.51	0.48	0.46	0.43	0.41	0.39	0.38	0.36
BK24	1.05	1.00	0.96	0.92	0.88	0.85	0.79	0.76	0.73	0.69	0.65	0.61	0.56	0.54	0.50	0.48	0.45	0.43	0.41	0.39	0.37
BK25	1.10	1.05	1.00	0.96	0.92	0.88	0.82	0.79	0.77	0.72	0.68	0.64	0.59	0.56	0.52	0.50	0.47	0.45	0.43	0.41	0.39
BK26	1.14	1.09	1.04	1.00	0.96	0.92	0.86	0.83	0.80	0.75	0.71	0.67	0.62	0.59	0.55	0.52	0.49	0.47	0.44	0.43	0.41
BK27	1.19	1.14	1.09	1.04	1.00	0.96	0.89	0.86	0.83	0.78	0.74	0.69	0.64	0.61	0.57	0.54	0.51	0.49	0.46	0.45	0.42
BK28	1.24	1.18	1.13	1.08	1.04	1.00	0.93	0.90	0.87	0.81	0.76	0.72	0.67	0.63	0.59	0.57	0.53	0.51	0.48	0.46	0.44
BK30	1.33	1.27	1.22	1.17	1.12	1.08	1.00	0.97	0.93	0.88	0.82	0.78	0.72	0.68	0.64	0.61	0.57	0.55	0.52	0.50	0.47
BK31	1.38	1.32	1.26	1.21	1.16	1.12	1.04	1.00	0.97	0.91	0.85	0.81	0.74	0.71	0.66	0.63	0.59	0.57	0.54	0.52	0.49
BK32	1.43	1.36	1.30	1.25	1.20	1.15	1.07	1.03	1.00	0.94	0.88	0.83	0.77	0.73	0.68	0.65	0.61	0.59	0.56	0.54	0.51
BK34	1.52	1.45	1.39	1.33	1.28	1.23	1.14	1.10	1.07	1.00	0.94	0.89	0.82	0.78	0.73	0.70	0.65	0.63	0.59	0.57	0.54
BK36	1.62	1.55	1.48	1.42	1.36	1.31	1.21	1.17	1.13	1.06	1.00	0.94	0.87	0.83	0.77	0.74	0.69	0.67	0.63	0.61	0.58
BK40	1.71	1.64	1.57	1.50	1.44	1.38	1.29	1.24	1.20	1.13	1.06	1.00	0.92	0.88	0.82	0.78	0.73	0.71	0.67	0.64	0.61
BK45	1.86	1.77	1.70	1.63	1.56	1.50	1.39	1.34	1.30	1.22	1.15	1.08	1.00	0.95	0.89	0.85	0.80	0.76	0.72	0.70	0.66
BK47	1.95	1.86	1.78	1.71	1.64	1.58	1.46	1.41	1.37	1.28	1.21	1.14	1.05	1.00	0.93	0.89	0.84	0.80	0.76	0.73	0.69
BK50	2.10	2.00	1.91	1.83	1.76	1.69	1.57	1.52	1.47	1.38	1.29	1.22	1.13	1.07	1.00	0.96	0.90	0.86	0.81	0.79	0.75
BK52	2.19	2.09	2.00	1.92	1.84	1.77	1.64	1.59	1.53	1.44	1.35	1.28	1.18	1.12	1.05	1.00	0.94	0.90	0.85	0.82	0.78
BK55	2.33	2.23	2.13	2.04	1.96	1.88	1.75	1.69	1.63	1.53	1.44	1.36	1.26	1.20	1.11	1.07	1.00	0.96	0.91	0.88	0.83
BK57	2.43	2.32	2.22	2.12	2.04	1.96	1.82	1.76	1.70	1.59	1.50	1.42	1.31	1.24	1.16	1.11	1.04	1.00	0.94	0.91	0.86
BK60	2.57	2.45	2.35	2.25	2.16	2.08	1.93	1.86	1.80	1.69	1.59	1.50	1.38	1.32	1.23	1.17	1.10	1.06	1.00	0.96	0.92
BK62	2.67	2.55	2.43	2.33	2.24	2.15	2.00	1.93	1.87	1.75	1.65	1.56	1.44	1.37	1.27	1.22	1.14	1.10	1.04	1.00	0.95
BK65	2.81	2.68	2.57	2.46	2.36	2.27	2.11	2.03	1.97	1.84	1.74	1.64	1.51	1.44	1.34	1.28	1.20	1.16	1.09	1.05	1.00
BK67	2.90	2.77	2.65	2.54	2.44	2.35	2.18	2.10	2.03	1.91	1.79	1.69	1.56	1.49	1.39	1.33	1.24	1.20	1.13	1.09	1.03
BK70	3.05	2.91	2.78	2.67	2.56	2.46	2.29	2.21	2.13	2.00	1.88	1.78	1.64	1.56	1.45	1.39	1.31	1.25	1.19	1.14	1.08
BK72	3.14	3.00	2.87	2.75	2.64	2.54	2.36	2.28	2.20	2.06	1.94	1.83	1.69	1.61	1.50	1.43	1.35	1.29	1.22	1.18	1.12
BK75	3.29	3.14	3.00	2.88	2.76	2.65	2.46	2.38	2.30	2.16	2.03	1.92	1.77	1.68	1.57	1.50	1.41	1.35	1.28	1.23	1.17
BK77	3.38	3.23	3.09	2.96	2.84	2.73	2.54	2.45	2.37	2.22	2.09	1.97	1.82	1.73	1.61	1.54	1.45	1.39	1.31	1.27	1.20
BK80	3.52	3.36	3.22	3.08	2.96	2.85	2.64	2.55	2.47	2.31	2.18	2.06	1.90	1.80	1.68	1.61	1.51	1.45	1.37	1.32	1.25
BK85	3.76	3.59	3.43	3.29	3.16	3.04	2.82	2.72	2.63	2.47	2.32	2.19	2.03	1.93	1.80	1.72	1.61	1.55	1.46	1.41	1.34
BK90	4.00	3.82	3.65	3.50	3.36	3.23	3.00	2.90	2.80	2.63	2.47	2.33	2.15	2.05	1.91	1.83	1.71	1.65	1.56	1.50	1.42
BK95	4.24	4.05	3.87	3.71	3.56	3.42	3.18	3.07	2.97	2.78	2.62	2.47	2.28	2.17	2.02	1.93	1.82	1.75	1.65	1.59	1.51
BK100	4.48	4.27	4.09	3.92	3.76	3.62	3.36	3.24	3.13	2.94	2.76	2.61	2.41	2.29	2.14	2.04	1.92	1.84	1.74	1.68	1.59
BK105	4.71	4.50	4.30	4.12	3.96	3.81	3.54	3.41	3.30	3.09	2.91	2.75	2.54	2.41	2.25	2.15	2.02	1.94	1.83	1.77	1.68
BK110	4.95	4.73	4.52	4.33	4.16	4.00	3.71	3.59	3.47	3.25	3.06	2.89	2.67	2.54	2.36	2.26	2.12	2.04	1.93	1.86	1.76
BK115	5.19	4.95	4.74	4.54	4.36	4.19	3.89	3.76	3.63	3.41	3.21	3.03	2.79	2.66	2.48	2.37	2.22	2.14	2.02	1.95	1.85
BK120	5.43	5.18	4.96	4.75	4.56	4.38	4.07	3.93	3.80	3.56	3.35	3.17	2.92	2.78	2.59	2.48	2.33	2.24	2.11	2.04	1.93
BK130	5.90	5.64	5.39	5.17	4.96	4.77	4.43	4.28	4.13	3.88	3.65	3.44	3.18	3.02	2.82	2.70	2.53	2.43	2.30	2.21	2.10
BK140	6.38	6.09	5.83	5.58	5.36	5.15	4.79	4.62	4.47	4.19	3.94	3.72	3.44	3.27	3.05	2.91	2.73	2.63	2.48	2.39	2.27
BK160	7.33	7.00	6.70	6.42	6.16	5.92	5.50	5.31	5.13	4.81	4.53	4.28	3.95	3.76	3.50	3.35	3.14	3.02	2.85	2.75	2.61
BK190	8.76	8.36	8.00	7.67	7.36	7.08	6.57	6.34	6.13	5.75	5.41	5.11	4.72	4.49	4.18	4.00	3.76	3.61	3.41	3.29	3.12

SELECTION

Center Distance/Belt Length

This table provides approximate center distance for the majority of V-Drives up to 3:1 ratio.

Data is useful for higher ratios, but if more accurate results are required, use the belt length formula found in the "Special Drives" selection section for S-L Classic drives.

Belt	Sum of Both V-Belt Sheave Diameters																	
Lgth.	4	5	6	7	8	9	10	11	12	13	14	15	16	17	18	19	20	21
16	4.9	4.1																
18	5.9	5.1																
20	6.9	6.1	5.2															
22	7.9	7.1	6.2															
24	8.9	8.1	7.2	6.3														
26	9.9	9.1	8.2	7.3	6.5													
28	10.9	10.1	9.2	8.4	7.6	6.6												
30	11.9	11.1	10.2	9.4	8.6	7.7												
32	12.9	12.1	11.2	10.4	9.6	8.7	8											
34	13.9	13.1	12.2	11.4	10.6	9.7	9											
36	14.9	14.1	13.2	12.4	11.6	10.7	10	9										
38	15.9	15.1	14.2	13.4	12.6	11.8	11	10	9.1									
40	16.9	16.1	15.3	14.4	13.6	12.8	12	11.1	10.1									
42	17.9	17.1	16.3	15.4	14.6	13.8	13.1	12.1	11.2	10.2								
44	18.9	18.1	17.3	16.4	15.6	14.8	14.1	13.1	12.2	11.2								
46	19.9	19.1	18.3	17.4	16.6	15.8	15.1	14.1	13.2	12.3	10.9							
48	20.9	20.1	19.3	18.4	17.7	16.8	16.1	15.1	14.3	13.3	12	11.3						
50	21.9	21.1	20.3	19.4	18.7	17.8	17.1	16.2	15.3	14.4	13.1	12.4	11.7					
52	22.9	22.1	21.3	20.4	19.7	18.8	18.1	17.2	16.3	15.4	14.1	13.5	12.8					
54	23.9	23.1	22.3	21.4	20.7	19.8	19.1	18.2	17.3	16.4	15.2	14.5	13.8	13.2				
56	24.9	24.1	23.3	22.4	21.7	20.8	20.1	19.2	18.3	17.4	16.2	15.6	14.9	14.2				
58	25.9	25.1	24.3	23.4	22.7	21.8	21.1	20.2	19.3	18.5	17.3	16.6	15.9	15.2	13.5			
60	26.9	26.1	25.3	24.5	23.7	22.8	22.1	21.2	20.4	19.5	18.3	17.6	17	16.3	14.6	14		
62	27.9	27.1	26.3	25.5	24.7	23.8	23.1	22.2	21.4	20.5	19.4	18.7	18	17.3	15.7	15.1		
64	28.9	28.1	27.3	26.5	25.7	24.8	24.1	23.2	22.4	21.5	20.4	19.7	19	18.3	16.8	16.1	15.5	
66	29.9	29.1	28.3	27.5	26.7	25.9	25.1	24.2	23.4	22.5	21.4	20.7	20	19.3	17.8	17.2	16.5	14.9
68	30.9	30.1	29.3	28.5	27.7	26.9	26.1	25.2	24.4	23.5	22.4	21.7	21	20.3	18.9	18.2	17.6	16
70	31.9	31.1	30.3	29.5	28.7	27.9	27.1	26.2	25.4	24.5	23.5	22.8	22.1	21.4	20	19.3	18.6	17.1
72	32.9	32.1	31.3	30.5	29.7	28.9	28.1	27.2	26.4	25.5	24.5	23.8	23.1	22.4	21	20.3	19.6	18.2
74	33.9	33.1	32.3	31.5	30.7	29.9	29.1	28.2	27.4	26.5	25.5	24.8	24.1	23.4	22	21.3	20.6	19.2
76	34.9	34.1	33.3	32.5	31.7	30.9	30.1	29.2	28.4	27.6	26.5	25.8	25.1	24.4	23.1	22.4	21.7	20.3
78	35.9	35.1	34.2	33.5	32.7	31.9	31.1	30.2	29.4	28.6	27.5	26.8	26.1	25.4	24.1	23.4	22.7	21.3
80	36.9	36.1	35.3	34.5	33.7	32.9	32.1	31.3	30.4	29.6	28.6	27.9	27.1	26.4	25.1	24.5	23.8	22.4
82	37.6	36.7	35.9	35.1	34.3	33.5	32.7	31.9	31	30.2	29.2	28.5	27.8	27	25.8	25.1	24.4	23.1
84	38.9	38.1	37.3	36.5	35.7	34.9	34.1	33.3	32.4	31.6	30.6	29.9	29.2	28.4	27.2	26.5	25.8	24.5
86	39.6	38.7	37.9	37.1	36.3	35.5	34.7	33.9	33	32.2	31.2	30.5	29.8	29	27.8	27.1	26.4	25.2
88	40.9	40.1	39.3	38.5	37.7	36.9	36.1	35.3	34.4	33.6	32.6	31.9	31.2	30.4	29.2	28.5	27.8	26.6
90	41.9	41.1	40.3	39.5	38.7	37.9	37.1	36.3	35.5	34.6	33.6	32.9	32.2	31.4	30.2	29.5	28.8	27.6
92	42.9	42.1	41.3	40.5	39.7	38.9	38.1	37.3	36.5	35.6	34.6	33.9	33.2	32.5	31.3	30.6	29.9	28.7
94	43.9	43.1	42.3	41.5	40.7	39.9	39.1	38.3	37.5	36.6	35.6	34.9	34.2	33.5	32.3	31.6	30.9	29.7
96	44.9	44.1	43.3	42.5	41.7	40.9	40.1	39.3	38.5	37.6	36.7	35.9	35.2	34.5	33.3	32.6	31.9	30.7
98	45.9	45.1	44.3	43.5	42.7	41.9	41.1	40.3	39.5	38.6	37.7	36.9	36.2	35.5	34.3	33.6	32.9	31.7
100	46.9	46.1	45.3	44.5	43.7	42.9	42.1	41.3	40.5	39.6	38.7	37.9	37.2	36.5	35.3	34.6	33.9	32.8

The centers shown in this shaded area are below the recommended minimum.

Variable Pitch Selection Procedure
1750 RPM Motors, Fractional Thru 30 HP

PROCEDURE

1. Calculate design HP: Motor HP x Service Factor
2. Determine motor shaft size from NEMA B MOTOR chart.
3. Scan Tables 1 & 2 for VP sheave and belt profile combination that will accommodate motor shaft size and design HP.
4. Go to associated VP SHEAVE-BELT table. Trace down the column headed by the selected VP Sheave size until the desired driven speed range is reached. The Driven Sheave size will be listed in the "Driven Sheave" column.
5. Calculate belt length as follows:

   If CD/D is greater than 1.5:

   FORMULA A: L=2CD + 1.57(D+d)

   CD = Center Distance
   D = Large Sheave diameter
   d = small sheave diameter

   If CD/D is less than 1.5:
   FORMULA B:

$$L = 2\,CD + 1.57\,(D + d) + \frac{(D - d)^2}{4\,CD}$$

NOTE: "L" Belt length is Outside Length for FHP belts, Pitch Length for Classical Belts (A, B, AX, BX)

EXAMPLE

A fan is to be driven at a speed in the range of 1400 to 1200 RPM by a 10 HP, 1750 RPM motor. Center Distance is 26". Desired Service Factor is 1.3.

SOLUTION

1. Calculate Design HP: 10 x 1.3 = 13 DHP.
2. Check NEMA B Motor shaft size: 1-3/8", from Table 3.
3. Scan Tables 1 & 2 for VP sheave size that covers 13 DHP and has 1-3/8" shaft capacity. Choose 2VP65 with AX belt (Other larger sizes are also suitable).
4. Check Selection Table for 2-Groove A-Section Belts. Locate column headed by "2VP65". Trace down to the "1425/1175" RPM range, which covers the 1400/1200 requirement. Trace over to the left hand column for the Driven Sheave size: Find Driven Sheave "2AK74".
5. Calculate belt length: Note that CD/D is 26/7.0 = 3.5. This is greater than 1.5, so "Formula A" can be used. L=2 x 26 + 1.57(7.0+5.7), L = 72.0, Use Belt Size AX71 which has a pitch length of 72.3".

NOTE: Calculated center distance is for maximum driven RPM. Center distance at minimum RPM will be approx. 1" longer.

Variable Pitch Sheave Selection Tables

One Groove VP Sheaves — **Table 1.**

Size	Max./Min. Pitch Dia.			Max. Bore	O.D.	Basic HP Rating At 1750 RPM *					
	4L/A	5L/B	5V			4L	A	AX	5L	B	BX
1VP25	--	--	--	1/2	2.32	...	...	...	...	...	...
1VP30	--	--	--	3/4	2.87	...	...	...	...	...	...
1VP34	2.9/1.9	3.2/2.4	--	7/8	3.15	0.75	1.50	2.00	0.63	0.34	3.45
1VP40	3.4/2.4	3.7/2.7	--	7/8	3.75	1.00	2.41	2.84	1.12	1.70	3.87
1VP44	3.8/2.9	4.1/3.1	--	1-1/8	4.15	1.30	3.13	3.57	1.48	2.87	4.66
1VP50	4.4/3.4	4.7/3.7	--	1-1/8	4.75	1.50	4.20	4.63	1.95	4.50	6.50
1VP56	5.0/4.0	5.3/4.3	--	1-1/8	5.35	...	5.20	5.67	2.20	5.15	8.10
1VP60	5.2/4.2	5.5/4.3	--	1-1/8	6.00	...	5.53	6.01	2.60	6.68	8.67
1VP62	5.6/4.6	5.9/4.9	6.3/5.3	1-1/4	5.95	...	6.18	6.68	3.00	7.70	9.80
1VP65	5.7/4.7	6.0/4.8	6.4/5.2	1-1/8	6.50	...	6.40	6.85	...	7.97	10.00
1VP68	6.2/5.2	6.5/5.5	6.9/5.9	1-3/8	6.55	...	7.10	7.60	...	9.30	11.30
1VP71	6.3/5.3	6.6/5.4	7.0/5.8	1-1/8	7.10	...	7.30	7.70	...	9.40	11.60
1VP75	6.7/5.7	7.0/5.8	7.4/6.2	1-1/8	7.50	...	8.00	8.50	...	10.40	12.60

(Cont. next page)

* For 3L Belts Only: 1VP25 2.2/1.4 P.D.
1VP30 2.7/1.8 P.D.

Ac Motors
NEMA B
Table 3.

1750RPM HP	Shaft Dia.
1/4, 1/3	...
1/2, 3/4	5/8
1, 1.5, 2	7/8
3, 5	1-1/8
7-1/2, 10	1-3/8
15, 20	1-5/8
25,30	1-7/8

Selection program available online at ptwizard.com

FEATURES/BENEFITS PAGE PT8-2	SELECTION/DIMENSIONS PAGE PT8-3	SELECTION PAGE PT8-10	

SELECTION

Variable Pitch Sheave Selection Tables

Two Groove VP Sheaves

Table 2

Size	Max./Min. Pitch Dia.			Max. Bore	O.D.	Two-Belt Basic HP Rating At 1750 RPM *						
	4L/A	5L/B	5V			4L	A	AX	5L	B	BX	5VX
2VP36	3.0/2.0	3.3/2.5	--	1	3.35	1.6	3.34	4.20	1.40	...	4.40	...
2VP42	3.6/2.6	3.9/2.9	--	1-1/8	3.95	2.4	5.54	6.42	2.60	2.98	6.34	...
2VP50	4.4/3.4	4.7/3.7	--	1-1/8	4.75	2.8	6.20	9.26	4.00	7.48	11.06	...
2VP56	5.0/4.0	5.3/4.3	--	1-1/8	5.35	...	10.40	11.34	4.40	9.40	11.76	...
2VP60	5.2/4.2	5.5/4.3	--	1-3/8	6.00	...	11.06	12.02	4.80	11.80	15.60	...
2VP62	5.6/4.6	5.9/4.9	6.3/5.3	1-3/8	5.95	...	12.36	13.36	6.00	13.90	17.82	34.00
2VP65	5.7/4.7	6.0/4.8	6.4/5.2	1-3/8	6.50	...	12.60	13.66	...	14.20	18.20	34.60
2VP68	6.2/5.2	6.5/5.5	6.9/5.9	1-3/8	6.55	...	14.20	15.20	...	17.00	21.00	38.00
2VP71	6.3/5.3	6.5/5.4	7.0/5.8	1-3/8	7.10	...	14.60	15.60	...	17.60	21.60	40.00
2VP75	6.7/5.7	7.0/5.8	7.4/6.2	1-3/8	7.50	...	15.80	17.00	...	19.00	23.80	44.00
2VP60A	5.2/4.2	5.5/4.3	--	1-5/8	6.00	...	11.06	12.02	4.80	11.80	15.60	...
2VP65A	5.7/4.7	6.0/4.8	6.4/5.2	1-5/8	6.50	...	12.60	13.66	...	14.20	18.20	34.60
2VP71A	6.3/5.3	6.5/5.4	7.0/5.8	1-5/8	7.10	...	14.60	15.60	...	17.60	21.60	40.00
2VP75A	6.7/5.7	7.0/5.8	7.4/6.2	1-5/8	7.50	...	15.80	17.00	...	19.00	23.80	44.00
2V56B70	6.7/5.7	7.0/5.8	7.4/6.2	1-7/8	7.50	...	15.80	17.00	...	19.00	23.80	44.00
2V68B80	7.7/6.7	7.7/6.8	8.4/7.2	1-7/8	8.50	...	18.00	18.80	...	23.40	28.20	52.00

* Rating is at Max. Pitch Dia. Apply Arc and Length correction factors for greater accuracy.

1VP Sheave Using A Or Ax Belt
Driven RPM For 1750 RPM Motor

Driven SHV.		1VP34		1VP40		1VP44		1VP50		1VP56		1VP60		1VP62		1VP65	
Size	P.D.	Max.	Min.	Max.	Min.	Max.	Min.	Max.	Min.	Max.	Min.	Max.	Min.	Max.	Min.	Max.	Min.
AK20	1.80	2819	1847	3306	2333	3694	2722	4278	3306	4861	3889	--	--	--	--	--	--
AK21	1.90	2671	1750	3132	2211	3500	2579	4053	3132	4605	3684	4789	3868	--	--	--	--
AK22	2.00	2538	1663	2975	2100	3325	2450	3850	2975	4375	3500	4550	3675	4900	4025	4988	4113
AK23	2.10	2417	1583	2833	2000	3167	2333	3667	2833	4167	3333	4333	3500	4667	3833	4750	3917
AK25	2.30	2207	1446	2587	1826	2891	2130	3348	2587	3804	3043	3957	3196	4261	3500	4337	3576
AK26	2.40	2115	1385	2479	1750	2771	2042	3208	2479	3646	2917	3792	3062	4083	3354	4156	3427
AK27	2.50	2030	1330	2380	1680	2660	1960	3080	2380	3500	2800	3640	2940	3920	3220	3990	3290
AK28	2.60	1952	1279	2288	1615	2558	1885	2962	2288	3365	2692	3500	2827	3769	3096	3837	3163
AK30	2.80	1813	1188	2125	1500	2375	1750	2750	2125	3125	2500	3250	2625	3500	2875	3563	2938
AK32	3.00	1692	1108	1983	1400	2217	1633	2567	1983	2917	2333	3033	2450	3267	2683	3325	2742
AK34	3.20	1586	1039	1859	1313	2078	1531	2406	1859	2734	2188	2844	2297	3063	2516	3117	2570
AK39	3.50	1450	950	1700	1200	1900	1400	2200	1700	2500	2000	2600	2100	2800	2300	2850	2350
AK41	3.70	1372	899	1608	1135	1797	1324	2081	1608	2365	1892	2459	1986	2649	2176	2696	2223
AK44	4.00	1269	831	1488	1050	1663	1225	1925	1488	2188	1750	2275	1838	2450	2013	2494	2056
AK46	4.20	1208	792	1417	1000	1583	1167	1833	1417	2083	1667	2167	1750	2333	1917	2375	1958
AK49	4.50	1128	739	1322	933	1478	1089	1711	1322	1944	1556	2022	1633	2178	1789	2217	1828
AK51	4.70	1080	707	1266	894	1415	1043	1638	1266	1862	1489	1936	1564	2085	1713	2122	1750
AK54	4.90	1036	679	1214	857	1357	1000	1571	1214	1786	1429	1857	1500	2000	1643	2036	1679

(Cont. next page)

Note: For drive selections below the bold line, use HP ratings on TABLE 1 or TABLE 2. For drive selections above the bold line, use BASIC HP RATING TABLES from DODGE engineering catalog for Driven Sheave size.

SELECTION

1 VP Sheave Using A or AX Belt

Driven RPM For 1750 RPM Motor

Driven SHV.		1VP34		1VP40		1VP44		1VP50		1VP56		1VP60		1VP62		1VP65	
Size	P.D.	Max.	Min.	Max.	Min.	Max.	Min.	Max.	Min.	Max.	Min.	Max.	Min.	Max.	Min.	Max.	Min.
AK56	5.20	976	639	1144	808	1279	942	1481	1144	1683	1346	1750	1413	1885	1548	1918	1582
AK59	5.50	923	605	1082	764	1209	891	1400	1082	1591	1273	1655	1336	1782	1464	1814	1495
AK61	5.70	890	583	1044	737	1167	860	1351	1044	1535	1228	1596	1289	1719	1412	1750	1443
AK64	6.00	846	554	992	700	1108	817	1283	992	1458	1167	1517	1225	1633	1342	1663	1371
AK66	6.20	819	536	960	677	1073	790	1242	960	1411	1129	1468	1185	1581	1298	1609	1327
AK69	6.50	781	512	915	646	1023	754	1185	915	1346	1077	1400	1131	1508	1238	1535	1265
AK71	6.70	757	496	888	627	993	731	1149	888	1306	1045	1358	1097	1463	1201	1489	1228
AK74	7.00	725	475	850	600	950	700	1100	850	1250	1000	1300	1050	1400	1150	1425	1175
AK79	7.50	677	443	793	560	887	653	1027	793	1167	933	1213	980	1307	1073	1330	1097
AK84	8.00	634	416	744	525	831	613	963	744	1094	875	1138	919	1225	1006	1247	1028
AK89	8.50	597	391	700	494	782	576	906	700	1029	824	1071	865	1153	947	1174	968
AK94	9.00	564	369	661	467	739	544	856	661	972	778	1011	817	1089	894	1108	914
AK99	9.50	534	350	626	442	700	516	811	626	921	737	958	774	1032	847	1050	866
AK104	10.00	508	333	595	420	665	490	770	595	875	700	910	735	980	805	998	823
AK109	10.60	479	314	561	396	627	462	726	561	825	660	858	693	925	759	941	776
AK114	11.00	461	302	541	382	605	445	700	541	795	636	827	668	891	732	907	748
AK124	12.00	423	277	496	350	554	408	642	496	729	583	758	613	817	671	831	685
AK134	13.00	390	256	458	323	512	377	592	458	673	538	700	565	754	619	767	633
AK144	14.00	363	238	425	300	475	350	550	425	625	500	650	525	700	575	713	588
AK154	15.00	338	222	397	280	443	327	513	397	583	467	607	490	653	537	665	548
AK184	18.00	282	185	331	233	369	272	428	331	486	389	506	408	544	447	554	457

Driven RPM For 1750 RPM Motor

Driven SHV		1VP68		1VP71		1VP75	
Size	P.D.	Max.	Min.	Max.	Min.	Max.	Min.
AK30	2.80	3875	3250	3938	3313	4188	3563
AK32	3.00	3617	3033	3675	3092	3908	3325
AK34	3.20	3391	2844	3445	2898	3664	3117
AK39	3.50	3100	2600	3150	2650	3350	2850
AK41	3.70	2932	2459	2980	2507	3169	2696
AK44	4.00	2713	2275	2756	2319	2931	2494
AK46	4.20	2583	2167	2625	2208	2792	2375
AK49	4.50	2411	2022	2450	2061	2606	2217
AK51	4.70	2309	1936	2346	1973	2495	2122
AK54	4.90	2214	1857	2250	1893	2393	2036
AK56	5.20	2087	1750	2120	1784	2255	1918
AK59	5.50	1973	1655	2005	1686	2132	1814
AK61	5.70	1904	1596	1934	1627	2057	1750
AK64	6.00	1808	1517	1838	1546	1954	1663
AK66	6.20	1750	1468	1778	1496	1891	1609
AK69	6.50	1669	1400	1696	1427	1804	1535
AK71	6.70	1619	1358	1646	1384	1750	1489
AK74	7.00	1550	1300	1575	1325	1675	1425
AK79	7.50	1447	1213	1470	1237	1563	1330
AK84	8.00	1356	1138	1378	1159	1466	1247
AK89	8.50	1276	1071	1297	1091	1379	1174
AK94	9.00	1206	1011	1225	1031	1303	1108
AK99	9.50	1142	958	1161	976	1234	1050
AK104	10.00	1085	910	1103	928	1173	998
AK109	10.60	1024	858	1040	875	1106	941
AK114	11.00	986	827	1002	843	1066	907
AK124	12.00	904	758	919	773	977	831
AK134	13.00	835	700	848	713	902	767
AK144	14.00	775	650	788	663	838	713
AK154	15.00	723	607	735	618	782	665
AK184	18.00	603	506	613	515	651	554

NOTE: For drive selections below the bold line, use HP ratings on TABLE 1 or TABLE 2. For drive selections above the bold line, use BASIC HP RATING TABLES from DODGE engineering catalog for Driven Sheave size.

V-Drives
FHP Drives
Drive Component Accessories
DYNA-SYNC
HT200/HTD Synchronous Drives
HT500 Synchronous Drives
Roller Chain Sprockets

SELECTION

1 VP Sheave Using B or BX Belt

Driven RPM For 1750 RPM Motor

Driven SHV.		1VP34		1VP40		1VP44		1VP50		1VP56		1VP60		1VP62		1VP65	
Size	P.D.	Max.	Min.	Max.	Min.	Max.	Min.	Max.	Min.	Max.	Min.	Max.	Min.	Max.	Min.	Max.	Min.
BK23	2.10	2667	2000	3083	2250	3417	2583	3917	3083	4417	3583	4583	3583	4917	4083	5000	4000
BK24	2.20	2545	1909	2943	2148	3261	2466	3739	2943	4216	3420	4375	3420	4693	3898	4773	3818
BK25	2.30	2435	1826	2815	2054	3120	2359	3576	2815	4033	3272	4185	3272	4489	3728	4565	3652
BK26	2.40	2333	1750	2698	1969	2990	2260	3427	2698	3865	3135	4010	3135	4302	3573	4375	3500
BK28	2.60	2154	1615	2490	1817	2760	2087	3163	2490	3567	2894	3702	2894	3971	3298	4038	3231
BK30	2.80	2000	1500	2313	1688	2563	1938	2938	2313	3313	2688	3438	2688	3688	3063	3750	3000
BK31	2.90	1931	1448	2233	1629	2474	1871	2836	2233	3198	2595	3319	2595	3560	2957	3621	2897
BK32	3.00	1867	1400	2158	1575	2392	1808	2742	2158	3092	2508	3208	2508	3442	2858	3500	2800
BK34	3.20	1750	1313	2023	1477	2242	1695	2570	2023	2898	2352	3008	2352	3227	2680	3281	2625
BK36	3.40	1647	1235	1904	1390	2110	1596	2419	1904	2728	2213	2831	2213	3037	2522	3088	2471
BK40	3.60	1556	1167	1799	1312	1993	1507	2285	1799	2576	2090	2674	2090	2868	2382	2917	2333
BK45	3.90	1436	1077	1660	1212	1840	1391	2109	1660	2378	1929	2468	1929	2647	2199	2692	2154
BK47	4.10	1366	1024	1579	1152	1750	1323	2006	1579	2262	1835	2348	1835	2518	2091	2561	2049
BK50	4.40	1273	955	1472	1074	1631	1233	1869	1472	2108	1710	2188	1710	2347	1949	2386	1909
BK52	4.60	1217	913	1408	1027	1560	1179	1788	1408	2016	1636	2092	1636	2245	1864	2283	1826
BK55	4.90	1143	857	1321	964	1464	1107	1679	1321	1893	1536	1964	1536	2107	1750	2143	1714
BK57	5.10	1098	824	1270	926	1407	1064	1613	1270	1819	1475	1887	1475	2025	1681	2059	1647
BK60	5.40	1037	778	1199	875	1329	1005	1523	1199	1718	1394	1782	1394	1912	1588	1944	1556
BK62	5.60	1000	750	1156	844	1281	969	1469	1156	1656	1344	1719	1344	1844	1531	1875	1500
BK65	5.90	949	712	1097	801	1216	919	1394	1097	1572	1275	1631	1275	1750	1453	1780	1424
BK67	6.10	918	689	1061	775	1176	889	1348	1061	1520	1234	1578	1234	1693	1406	1721	1377
BK70	6.40	875	656	1012	738	1121	848	1285	1012	1449	1176	1504	1176	1613	1340	1641	1313
BK72	6.60	848	636	981	716	1087	822	1246	981	1405	1140	1458	1140	1564	1299	1591	1273
BK75	6.90	812	609	938	685	1040	786	1192	938	1344	1091	1395	1091	1496	1243	1522	1217
BK77	7.10	789	592	912	665	1011	764	1158	912	1306	1060	1356	1060	1454	1208	1479	1183
BK80	7.40	757	568	875	639	970	733	1111	875	1253	1017	1301	1017	1395	1159	1419	1135
BK85	7.90	709	532	820	598	908	687	1041	820	1174	953	1218	953	1307	1085	1329	1063
BK90	8.40	667	500	771	563	854	646	979	771	1104	896	1146	896	1229	1021	1250	1000
BK95	8.90	629	472	728	531	806	610	924	728	1042	846	1081	846	1160	963	1180	944
BK100	9.40	596	447	689	503	763	577	875	689	987	801	1024	801	1098	912	1117	894
BK105	9.90	566	424	654	477	725	548	831	654	937	760	972	760	1043	866	1061	848
BK110	10.40	538	404	623	454	690	522	791	623	892	724	925	724	993	825	1010	808
BK115	10.90	514	385	594	433	658	498	755	594	851	690	883	690	947	787	963	771
BK120	11.40	491	368	568	414	629	476	721	568	814	660	844	660	906	752	921	737
BK130	12.40	452	339	522	381	579	438	663	522	748	607	776	607	833	692	847	677
BK140	13.40	418	313	483	353	535	405	614	483	692	562	718	562	771	640	784	627
BK160	15.40	364	273	420	307	466	352	534	420	602	489	625	489	670	557	682	545
BK190	18.40	304	228	352	257	390	295	447	352	504	409	523	409	561	466	571	457

(Cont. next page)

NOTE: For drive selections below the bold line, use HP ratings on TABLE 1 or TABLE 2. For drive selections above the bold line, use BASIC HORSEPOWER RATING TABLES from DODGE engineering catalog for Driven Sheave size.

SELECTION

1 VP Sheave Using B or BX Belt

Driven RPM For 1750 RPM Motor

Driven SHV.		1VP68		1VP71		1VP75	
Size	P.D.	Max.	Min.	Max.	Min.	Max.	Min.
BK28	2.60	4375	3702	4442	3635	4712	3904
BK30	2.80	4063	3438	4125	3375	4375	3625
BK31	2.90	3922	3319	3983	3259	4224	3500
BK34	3.20	3555	3008	3609	2953	3828	3172
BK36	3.40	3346	2831	3397	2779	3603	2985
BK40	3.60	3160	2674	3208	2625	3403	2819
BK45	3.90	2917	2468	2962	2423	3141	2603
BK47	4.10	2774	2348	2817	2305	2988	2476
BK50	4.40	2585	2188	2625	2148	2784	2307
BK52	4.60	2473	2092	2511	2054	2663	2207
BK55	4.90	2321	1964	2357	1929	2500	2071
BK57	5.10	2230	1887	2265	1853	2402	1990
BK60	5.40	2106	1782	2139	1750	2269	1880
BK62	5.60	2031	1719	2063	1688	2188	1813
BK65	5.90	1928	1631	1958	1602	2076	1720
BK67	6.10	1865	1578	1893	1549	2008	1664
BK70	6.40	1777	1504	1805	1477	1914	1586
BK72	6.60	1723	1458	1750	1432	1856	1538
BK75	6.90	1649	1395	1674	1370	1775	1471
BK77	7.10	1602	1356	1627	1331	1725	1430
BK80	7.40	1537	1301	1561	1277	1655	1372
BK85	7.90	1440	1218	1462	1196	1551	1285
BK90	8.40	1354	1146	1375	1125	1458	1208
BK95	8.90	1278	1081	1298	1062	1376	1140
BK100	9.40	1210	1024	1229	1005	1303	1080
BK105	9.90	1149	972	1167	955	1237	1025
BK110	10.40	1094	925	1111	909	1178	976
BK115	10.90	1044	883	1060	867	1124	931
BK120	11.40	998	844	1013	829	1075	890
BK130	12.40	917	776	931	762	988	819
BK140	13.40	849	718	862	705	914	757
BK160	15.40	739	625	750	614	795	659
BK190	18.40	618	523	628	514	666	552

NOTE: For drive selections below the bold line, use HP ratings on TABLE 1 or TABLE 2. For drive selections above the bold line, refer to the BASIC HORSEPOWER Rating Tables in the DODGE Engineering Catalog for Driven Sheave size.

SELECTION

2 VP Sheave Using A or AX Belt

Driven RPM For 1750 RPM Motor

Driven SHV.		2VP36		2VP42		2VP50		2VP56		2VP60		2VP62		2VP65	
Size	P.D.	Max.	Min.	Max.	Min.	Max.	Min.	Max.	Min.	Max.	Min.	Max.	Min.	Max.	Min.
2AK20	1.80	2917	1944	3500	2528	4278	3306	4861	3889	--	--	--	--	--	--
2AK21	1.90	2763	1842	3316	2395	4053	3132	4605	3684	4789	3868	--	--	--	--
2AK22	2.00	2625	1750	3150	2275	3850	2975	4375	3500	4550	3675	4900	4025	4988	4113
2AK23	2.10	2500	1667	3000	2167	3667	2833	4167	3333	4333	3500	4667	3833	4750	3917
2AK25	2.30	2283	1522	2739	1978	3348	2587	3804	3043	3957	3196	4261	3500	4337	3576
2AK26	2.40	2188	1458	2625	1896	3208	2479	3646	2917	3792	3062	4083	3354	4156	3427
2AK27	2.50	2100	1400	2520	1820	3080	2380	3500	2800	3640	2940	3920	3220	3990	3290
2AK28	2.60	2019	1346	2423	1750	2962	2288	3365	2692	3500	2827	3769	3096	3837	3163
2AK30	2.80	1875	1250	2250	1625	2750	2125	3125	2500	3250	2625	3500	2875	3563	2938
2AK32	3.00	1750	1167	2100	1517	2567	1983	2917	2333	3033	2450	3267	2683	3325	2742
2AK34	3.20	1641	1094	1969	1422	2406	1859	2734	2188	2844	2297	3063	2516	3117	2570
2AK39	3.50	1500	1000	1800	1300	2200	1700	2500	2000	2600	2100	2800	2300	2850	2350
2AK41	3.70	1419	946	1703	1230	2081	1608	2365	1892	2459	1986	2649	2176	2696	2223
2AK44	4.00	1313	875	1575	1138	1925	1488	2188	1750	2275	1838	2450	2013	2494	2056
2AK46	4.20	1250	833	1500	1083	1833	1417	2083	1667	2167	1750	2333	1917	2375	1958
2AK49	4.50	1167	778	1400	1011	1711	1322	1944	1556	2022	1633	2178	1789	2217	1828
2AK51	4.70	1117	745	1340	968	1638	1266	1862	1489	1936	1564	2085	1713	2122	1750
2AK54	5.00	1050	700	1260	910	1540	1190	1750	1400	1820	1470	1960	1610	1995	1645
2AK56	5.20	1010	673	1212	875	1481	1144	1683	1346	1750	1413	1885	1548	1918	1582
2AK59	5.50	955	636	1145	827	1400	1082	1591	1273	1655	1336	1782	1464	1814	1495
2AK61	5.70	921	614	1105	798	1351	1044	1535	1228	1596	1289	1719	1412	1750	1443
2AK64	6.00	875	583	1050	758	1283	992	1458	1167	1517	1225	1633	1342	1663	1371
2AK74	7.00	750	500	900	650	1100	850	1250	1000	1300	1050	1400	1150	1425	1175
2AK84	8.00	656	438	788	569	963	744	1094	875	1137	919	1225	1006	1247	1028
2AK94	9.00	583	389	700	506	856	661	972	778	1011	817	1089	894	1108	914
2AK104	10.00	525	350	630	455	770	595	875	700	910	735	980	805	998	823
2AK114	11.00	477	318	573	414	700	541	795	636	827	668	891	732	907	748
2AK124	12.00	438	292	525	379	642	496	729	583	758	613	817	671	831	685
2AK134	13.00	404	269	485	350	592	458	673	538	700	565	754	619	767	633
2AK144	14.00	375	250	450	325	550	425	625	500	650	525	700	575	713	588
2AK154	15.00	350	233	420	303	513	397	583	467	607	490	653	537	665	548
2AK184	18.00	292	194	350	253	428	331	486	389	506	408	544	447	554	457

Driven RPM For 1750 RPM Motor

Driven SHV.		2VP68		2VP71		2VP75	
Size	P.D.	Max.	Min.	Max.	Min.	Max.	Min.
2AK27	2.50	4340	3640	4410	3710	4690	3990
2AK28	2.60	4173	3500	4240	3567	4510	3837
2AK30	2.80	3875	3250	3938	3313	4188	3563
2AK32	3.00	3617	3033	3675	3092	3908	3325
2AK34	3.20	3391	2844	3445	2898	3664	3117
2AK39	3.50	3100	2600	3150	2650	3350	2850
2AK41	3.70	2932	2459	2980	2507	3169	2696
2AK44	4.00	2713	2275	2756	2319	2931	2494
2AK46	4.20	2583	2167	2625	2208	2792	2375
2AK49	4.50	2411	2022	2450	2061	2606	2217
2AK51	4.70	2309	1936	2346	1973	2495	2122
2AK54	5.00	2170	1820	2205	1855	2345	1995
2AK56	5.20	2087	1750	2120	1784	2255	1918
2AK59	5.50	1973	1655	2005	1686	2132	1814
2AK61	5.70	1904	1596	1934	1627	2057	1750

Driven RPM For 1750 RPM Motor

Driven SHV.		2VP68		2VP71		2VP75	
Size	P.D.	Max.	Min.	Max.	Min.	Max.	Min.
2AK64	6.00	1808	1517	1838	1546	1954	1663
2AK74	7.00	1550	1300	1575	1325	1675	1425
2AK84	8.00	1356	1138	1378	1159	1466	1247
2AK94	9.00	1206	1011	1225	1031	1303	1108
2AK104	10.00	1085	910	1103	928	1173	998
2AK114	11.00	986	827	1002	843	1066	907
2AK124	12.00	904	758	919	773	977	831
2AK134	13.00	835	700	848	713	902	767
2AK144	14.00	775	650	788	663	838	713
2AK154	15.00	723	607	735	618	782	665
2AK184	18.00	603	506	613	515	651	554

NOTE: For drive selections below the bold line, use HP ratings on TABLE 1 or TABLE 2. For drive selections above the bold line, refer to the BASIC HORSEPOWER Rating Tables in the DODGE Engineering Catalog for Driven Sheave size.

SELECTION

2 VP Sheave Using B or BX Belt

Driven RPM For 1750 RPM Motor

Dia.	Driven Sheave		2VP36		2VP42		2VP50		2VP56		2VP60		2VP62		2VP65	
O.D.	Size	P.D.	Max.	Min.	Max.	Min.	Max.	Min.	Max.	Min.	Max.	Min.	Max.	Min.	Max.	Min.
2.5	2BK25	2.30	2511	1902	2967	2207	3576	2815	4033	3272	--	--	--	--	--	--
2.7	2BK27	2.50	2310	1750	2730	2030	3290	2590	3710	3010	3850	3010	4130	3430	4200	3360
2.95	2BK28	2.60	2221	1683	2625	1952	3163	2490	3567	2894	3702	2894	3971	3298	4038	3231
3.15	2BK30	2.80	2062	1563	2437	1813	2937	2312	3312	2687	3438	2687	3688	3063	3750	3000
3.35	2BK32	3.00	1925	1458	2275	1692	2742	2158	3092	2508	3208	2508	3442	2858	3500	2800
3.55	2BK34	3.20	1805	1367	2133	1586	2570	2023	2898	2352	3008	2352	3227	2680	3281	2625
3.75	2BK36	3.40	1699	1287	2007	1493	2419	1904	2728	2213	2831	2213	3037	2522	3088	2471
3.95	2BK40	3.60	1604	1215	1896	1410	2285	1799	2576	2090	2674	2090	2868	2382	2917	2333
4.25	2BK45	3.90	1481	1122	1750	1301	2109	1660	2378	1929	2468	1929	2647	2199	2692	2154
4.45	2BK47	4.10	1409	1067	1665	1238	2006	1579	2262	1835	2348	1835	2518	2091	2561	2049
4.75	2BK50	4.40	1312	994	1551	1153	1869	1472	2108	1710	2188	1710	2347	1949	2386	1909
4.95	2BK52	4.60	1255	951	1484	1103	1788	1408	2016	1636	2092	1636	2245	1864	2283	1826
5.25	2BK55	4.90	1179	893	1393	1036	1679	1321	1893	1536	1964	1536	2107	1750	2143	1714
5.45	2BK57	5.10	1132	858	1338	995	1613	1270	1819	1475	1887	1475	2025	1681	2059	1647
5.75	2BK60	5.40	1069	810	1264	940	1523	1199	1718	1394	1782	1394	1912	1588	1944	1556
5.95	2BK62	5.60	1031	781	1219	906	1469	1156	1656	1344	1719	1344	1844	1531	1875	1500
6.25	2BK65	5.90	979	742	1157	860	1394	1097	1572	1275	1631	1275	1750	1453	1780	1424
6.45	2BK67	6.10	947	717	1119	832	1348	1061	1520	1234	1578	1234	1693	1406	1721	1377
6.75	2BK70	6.40	902	684	1066	793	1285	1012	1449	1176	1504	1176	1613	1340	1641	1312
7.75	2BK80	7.40	780	591	922	686	1111	875	1253	1017	1301	1017	1395	1159	1419	1135
8.75	2BK90	8.40	688	521	813	604	979	771	1104	896	1146	896	1229	1021	1250	1000
9.75	2BK100	9.40	614	465	726	540	875	689	987	801	1024	801	1098	912	1117	894
11.75	2BK120	11.40	507	384	599	445	721	568	814	660	844	660	906	752	921	737
12.75	2BK130	12.40	466	353	550	409	663	522	748	607	776	607	833	692	847	677
13.75	2BK140	13.40	431	326	509	379	614	483	692	562	718	562	771	640	784	627
15.75	2BK160	15.40	375	284	443	330	534	420	602	489	625	489	670	557	682	545
18.75	2BK190	18.40	314	238	371	276	447	352	504	409	523	409	561	466	571	457

Driven RPM For 1750 RPM Motor

Dia.	Driven Sheave		2VP68		2VP71		2VP75		2V58B70		2V68B80	
O.D.	Size	P.D.	Max.	Min.	Max.	Min.	Max.	Min.	Max.	Min.	Max.	Min.
3.55	2BK34	3.20	3555	3008	3555	2953	3828	3172	3828	3172	--	--
3.75	2BK36	3.40	3346	2831	3346	2779	3603	2985	3603	2985	3963	3500
3.95	2BK40	3.60	3160	2674	3160	2625	3403	2819	3403	2819	3743	3306
4.25	2BK45	3.90	2917	2468	2917	2423	3141	2603	3141	2603	3455	3051
4.45	2BK47	4.10	2774	2348	2774	2305	2988	2476	2988	2476	3287	2902
4.75	2BK50	4.40	2585	2188	2585	2148	2784	2307	2784	2307	3062	2705
4.95	2BK52	4.60	2473	2092	2473	2054	2663	2207	2663	2207	2929	2587
5.25	2BK55	4.90	2321	1964	2321	1929	2500	2071	2500	2071	2750	2429
5.45	2BK57	5.10	2230	1887	2230	1853	2402	1990	2402	1990	2642	2333
5.75	2BK60	5.40	2106	1782	2106	1750	2269	1880	2269	1880	2495	2204
5.95	2BK62	5.60	2031	1719	2031	1687	2188	1813	2188	1813	2406	2125
6.25	2BK65	5.90	1928	1631	1928	1602	2076	1720	2076	1720	2284	2017
6.45	2BK67	6.10	1865	1578	1865	1549	2008	1664	2008	1664	2209	1951
6.75	2BK70	6.40	1777	1504	1777	1477	1914	1586	1914	1586	2105	1859
7.75	2BK80	7.40	1537	1301	1537	1277	1655	1372	1655	1372	1821	1608
8.75	2BK90	8.40	1354	1146	1354	1125	1458	1208	1458	1208	1604	1417
9.75	2BK100	9.40	1210	1024	1210	1005	1303	1080	1303	1080	1434	1266
11.75	2BK120	11.40	998	844	998	829	1075	890	1075	890	1182	1044
12.75	2BK130	12.40	917	776	917	762	988	819	988	819	1087	960
13.75	2BK140	13.40	849	718	849	705	914	757	914	757	1006	888
15.75	2BK160	15.40	739	625	739	614	795	659	795	659	875	773
18.75	2BK190	18.40	618	523	618	514	666	552	666	552	732	647

NOTE: For drive selections below the bold line, use HP ratings on TABLE 1 or TABLE 2. For drive selections above the bold line, refer to the BASIC HORSEPOWER Rating Tables in the DODGE Engineering Catalog for Driven Sheave size.

V-Drives
FHP Drives
Drive Component Accessories
DYNA-SYNC
HT200/HTD Synchronous Drives
HT500 Synchronous Drives
Roller Chain Sprockets

SELECTION

2VP Sheave Using 5VX Belt

Driven RPM For 1750 RPM Motor

Driven Sheave	2VP62		2VP65		2VP68		2VP71		2VP75		2V58B70		2V68B80	
	Max.	Min.	Max.	Min.	Max.	Min.	Max.	Min.	Max.	Min.	Max.	Min.	Max.	Min.
2/5V4.4	2564	2157	2605	2116	2808	2401	2849	2360	3012	2523	3012	2442	3419	2930
2/5V4.65	2423	2038	2462	2000	2654	2269	2692	2231	2846	2385	2846	2308	3231	2769
2/5V4.9	2297	1932	2333	1896	2516	2151	2552	2115	2698	2260	2698	2188	3063	2625
2/5V5.2	2201	1851	2236	1816	2410	2061	2445	2026	2585	2166	2585	2096	2934	2515
2/5V5.5	2042	1718	2074	1685	2236	1912	2269	1880	2398	2009	2398	1944	2722	2333
2/5V5.9	1901	1599	1931	1569	2082	1780	2112	1750	2233	1871	2233	1810	2534	2172
2/5V6.3	1778	1496	1806	1468	1948	1665	1976	1637	2089	1750	2089	1694	2371	2032
2/5V6.7	1670	1405	1697	1379	1830	1564	1856	1538	1962	1644	1962	1591	2227	1909
2/5V7.1	1575	1325	1600	1300	1725	1475	1750	1450	1850	1550	1850	1500	2100	1800
2/5V7.5	1490	1253	1514	1230	1632	1395	1655	1372	1750	1466	1750	1419	1986	1703
2/5V8.0	1396	1174	1418	1152	1528	1307	1551	1285	1639	1373	1639	1329	1861	1595
2/5V8.5	1313	1104	1333	1083	1438	1229	1458	1208	1542	1292	1542	1250	1750	1500
2/5V9.0	1239	1042	1258	1022	1357	1160	1376	1140	1455	1219	1455	1180	1652	1416
2/5V9.25	1205	1014	1224	995	1320	1128	1339	1109	1415	1186	1415	1148	1607	1377
2/5V9.75	1142	961	1161	943	1251	1070	1269	1052	1342	1124	1342	1088	1523	1306
2/5V10.3	1081	909	1098	892	1184	1012	1201	995	1270	1064	1270	1029	1441	1235
2/5V10.9	1021	859	1037	843	1118	956	1134	940	1199	1005	1199	972	1361	1167
2/5V11.3	984	828	1000	813	1078	922	1094	906	1156	969	1156	938	1313	1125
2/5V11.8	942	793	957	778	1032	882	1047	868	1107	927	1107	897	1256	1077
2/5V12.5	889	748	903	734	974	833	988	819	1044	875	1044	847	1185	1016
2/5V13.2	842	708	855	695	922	788	935	775	989	828	989	802	1122	962
2/5V14.0	793	667	806	655	869	743	881	730	932	781	932	755	1058	906
2/5V15.0	740	622	752	611	810	693	822	681	869	728	869	705	987	846
2/5V16.0	693	583	704	572	759	649	770	638	814	682	814	660	925	792
2/5V18.7	593	499	602	489	649	555	659	546	696	583	696	565	790	677
2/5V21.2	523	440	531	431	572	489	581	481	614	514	614	498	697	597
2/5V23.6	469	395	477	387	514	439	521	432	551	462	551	447	626	536
2/5V28.0	395	332	401	326	433	370	439	364	464	389	464	376	527	452

NOTE: For drive selections below the bold line, use HP ratings on TABLE 1. or TABLE 2.
For drive selections above the bold line, use BASIC HP RATING TABLES from DODGE ENGINEERING Catalog for driven sheave size.

CONTENTS

Drive Component Accessories

Wide Range Belts - REEVES PT9-2

Wide Range Belts PT9-3

TAPER-LOCK Flat-Face Pulleys PT9-4

DODGE Motor Bases PT9-5

Shaft Collars PT9-7

Adjustable NEMA Motor Bases PT9-8

Part Number Index INDEX-1

Keyword Index INDEX-43

DRIVE COMPONENT ACCESSORIES

DODGE®

Wide Range Belts - REEVES

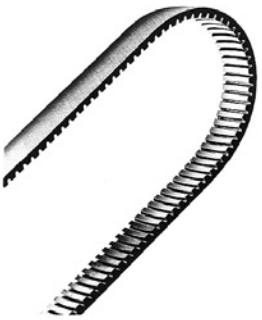

Belt Series	For Pulley Numbers
1422	95, 5675, 406
1922	96, 97, 7202, 408
2322	98, 409
2926	98–1/2, 9205, 411
3236	910, 410, 410/8
4430	912, 912–15, 1110, 412
	412/15, 1320, 1330
4830	414, 414/25

WIDE RANGE BELTS FOR REEVES PULLEYS

For Adjustable Speed Drive Applications
Oil And Heat Resistant
Static Conducting
Industry Standard Belt Numbers

1st Two Digits - Belt Width in Sixteenth Inch
2nd Two Digits - Sheave Groove Angle
Remaining Digits - Pitch Length in Tenths of an inch.

Belt Size	DODGE P/N	REEVES P/N
1422V SERIES		
1422V270	**109407**	**8H95450**
1422V300	**109409**	**8H95123**
1422V330	**109411**	**8H95451**
1422V360	**109011**	**8H95124**
1422V400	**109414**	**8H95452**
1422V420	**109012**	**8H95125**
1422V466	**109418**	**8H95453**
1422V480	**109013**	**8H95126**
1422V540	**109014**	**8H95127**
1422V600	**109422**	**8H95128**
1422V660	**109423**	**8H95454**
1422V720	**109424**	**8H95455**
1422V780	**109425**	**8H95456**
1922V SERIES		
1922V256	**109493**	**8H95457**
1922V321	**109498**	**8H95133**
1922V338	**109500**	**8H95458**
1922V363	**109501**	**8H95134**
1922V386	**109020**	**8H95135**
1922V403	**109504**	**8H95459**
1922V417	**109505**	**8H95460**
1922V426	**109021**	**8H95137**
1922V443	**109507**	**8H95461**
1922V454	**109508**	**8H95139**
1922V484	**109022**	**8H95140**
1922V544	**109023**	**8H95142**
1922V604	**109024**	**8H95143**
1922V646	**109515**	**8H95462**
1922V666	**109516**	**8H95145**
1922V726	**109520**	**8H95148**
1922V751	**109521**	**8H95463**
1922V756	**109522**	**8H95464**
1922V806	**109523**	**8H95149**
2322V SERIES		
2322V364	**109599**	**8H95465**
2322V396	**109601**	**8H95466**
2322V421	**109602**	**8H95153**
2322V443	**–**	**8H95154**

Belt Size	DODGE P/N	REEVES P/N
2322V SERIES (CONT)		
2322V486	**–**	**8H95155**
2322V521	**109031**	**8H95156**
2322V541	**109607**	**8H95157**
2322V601	**109601**	**8H95466**
2322V661	**109033**	**8H95159**
2322V681	**109611**	**8H95467**
2322V721	**109034**	**8H95162**
2322V801	**109614**	**8H95163**
2322V886	**109617**	**8H95468**
2322V1001	**109619**	**8H95469**
2926V SERIES		
2926V471	**109713**	**8H95477**
2926V486	**109715**	**8H95170**
2926V521	**109717**	**8H95171**
2926V546	**109719**	**8H95172**
2926V574	**109720**	**8H95173**
2926V586	**109721**	**8H95174**
2926V606	**109722**	**8H95175**
2926V636	**109740**	**8H95177**
2926V646	**109724**	**8H95178**
2926V686	**109726**	**8H95180**
2926V726	**109728**	**8H95182**
2926V776	**109729**	**8H95183**
2926V834	**109731**	**8H95184**
2926V856	**109732**	**8H95185**
2926V906	**109734**	**8H95187**
2926V966	**109735**	**8H95478**
3226V SERIES		
3226V433	**109749**	**8H95470**
3226V465	**109750**	**8H95471**
3226V505	**109751**	**8H95472**
3226V545	**109753**	**8H95473**
3226V585	**109754**	**8H95474**
3226V603	**109040**	**8H95192**
3226V663	**109041**	**8H95193**
3226V723	**109042**	**8H95194**
3226V783	**109043**	**8H95195**
3226V843	**109044**	**8H95196**

Belt Size	DODGE P/N	REEVES P/N
3226V SERIES (CONT)		
3226V903	**109760**	**8H95197**
3226V963	**109761**	**8H95198**
3226V1023	**109762**	**8H95475**
3226V1083	**109763**	**8H95476**
4430V SERIES		
4430V548	**109848**	**8H95479**
4430V555	**109849**	**8H95480**
4430V578	**109852**	**8H95481**
4430V610	**109705**	**8H95482**
4430V630	**109855**	**8H95483**
4430V660	**109856**	**8H95484**
4430V670	**109705**	**8H95705**
4430V690	**109858**	**8H95485**
4430V700	**109050**	**8H95486**
4430V730	**109862**	**8H95204**
4430V740	**109863**	**8H95740**
4430V790	**109837**	**8H95205**
4430V850	**109052**	**8H95206**
4430V910	**109053**	**8H95207**
4430V970	**109845**	**8H95208**
4430V1030	**109893**	**8H95209**
4430V1090	**109877**	**8H95210**
4430V1150	**109879**	**8H95488**
4430V1320	**109882**	**8H95489**
4480V SERIES		
4830V614	**109907**	**8H95490**
4830V653	**109908**	**8H95491**
4830V692	**109909**	**8H95492**
4830V699	**109910**	**8H95493**
4830V730	**109911**	**8H95494**
4830V850	**109912**	**8H95495**
4830V970	**109913**	**8H95496**
4830V1070	**109914**	**8H95497**

DODGE®

Wide Range Belts

Part No.	Descr.	Wt.
1200 SERIES		
109400	1228V255	.26
1400 SERIES		
109407	1422V270	.30
109408	1422V290	.33
109409	1422V300	.30
109411	1422V330	.37
109412	1422V340	.40
109011	1422V360	.50
109414	1422V400	.45
109012	1422V420	.50
109416	1422V440	.50
109417	1422V460	.52
109418	1422V466	.52
109419	1422V470	.53
109013	1422V480	.60
109014	1422V540	.70
109422	1422V600	.68
109423	1422V660	.74
109425	1422V780	.87
109424	1430V215	.31
1600 SERIES		
109459	1626V262	.42
109461	1626V293	.47
109462	1626V304	.40
109463	1626V330	.50
109464	1626V339	.60
109466	1626V384	.70
109469	1626V428	.68
109470	1626V440	.70
109472	1626V513	.81
109473	1626V517	.82
109475	1626V604	.95
109477	1626V700	1.10
109480	1628V315	.51
109479	1628V210	.29
109482	1632V210	.40
1800 SERIES		
109485	1822V328	.57
109487	1828V368	.73
1900 SERIES		
109493	1922V256	.50
109494	1922V277	.51
109495	1922V282	.60
109496	1922V289	.55
109497	1922V302	.56
109498	1922V321	.60
109499	1922V332	.61
109501	1922V363	.60
109502	1922V381	.70
109020	1922V386	.80
109504	1922V403	.70
109505	1922V417	.76
109021	1922V426	.90
109507	1922V443	.81
109508	1922V454	.70
109509	1922V460	.84
109022	1922V484	1.20
109511	1922V526	.96
109023	1922V544	1.20
109024	1922V604	1.40

Part No.	Descr.	Wt.
109514	1922V630	1.10
109515	1922V646	1.20
109516	1922V516	1.20
109517	1922V686	1.20
109517	1922V706	1.30
109520	1922V726	1.30
109522	1922V756	1.40
109523	1922V806	1.50
109524	1922V846	1.50
109525	1922V891	1.60
109533	1926V250	.50
109068	1926V275	.53
109542	1930V366	.80
109543	1930V375	.81
109544	1930V400	.87
109545	1930V425	.90
109546	1930V431	.93
109549	1930V491	1.10
109552	1930V541	1.10
109554	1930V591	1.30
109555	1930V600	1.30
109557	1930V641	1.30
109559	1930V691	1.50
109561	1930V750	1.60
109562	1930V791	1.70
109565	1930V891	1.90
109568	1930V991	2.10
109571	1930V1091	2.30
2100 SERIES		
109585	2126V309	.60
2200 SERIES		
109590	2226V307	.58
109592	2230V266	.49
109594	2230V275	.60
109596	2230V326	.69
2300 SERIES		
109599	2322V364	.90
109601	2322V601	1.10
109602	2322V421	1.00
109604	2322V441	1.20
109030	2322V481	1.50
109031	2322V521	1.60
109607	2322V541	1.40
109032	2322V601	1.80
109609	2322V621	1.60
109033	2322V661	1.90
109611	2322V681	1.80
109612	2322V701	1.80
109034	2322V721	2.30
109614	2322V801	2.10
109615	2322V826	2.30
109617	2322V886	2.30
109618	2322V921	2.40
109620	2322V1061	2.80
109623	2326V310	.74
109242	2326V359	.92
109625	2330V273	.56
2400 SERIES		
109631	2426V343	.82
109637	2430V297	.71
109639	2436V331	.77

Part No.	Descr.	Wt.
2500 SERIES		
109641	2526V314	.92
109644	2530V470	1.80
109647	2530V530	1.90
109648	2530V550	1.90
109650	2530V575	2.20
109100	2530V595	2.50
109652	2530V600	2.30
109653	2530V610	2.50
109101	2530V630	2.70
109109	2530V660	2.60
109102	2530V670	2.60
109658	2530V690	2.60
109104	2530V730	3.00
109662	2530V740	2.80
109664	2530V790	3.00
109107	2530V840	3.30
109672	2530V990	3.70
109675	2530V1090	4.10
2600 SERIES		
109688	2626V369	1.20
109689	2626V388	1.20
109692	2630V345	1.00
109694	2636V332	1.10
2800 SERIES		
109696	2822V778	3.40
109698	2826V412	1.50
109699	2826V452	1.60
109250	2830V337	1.13
109701	2830V363	1.00
109700	2830V366	1.03
109251	2830V367	1.23
109702	2830V393	.99
109703	2830V422	1.50
109706	2836V343	1.20
109708	2836V380	1.30
2900 SERIES		
109710	2926V366	1.40
109711	2926V400	1.50
109712	2926V426	1.60
109713	2926V471	1.80
109714	2926V477	1.60
109715	2926V486	1.80
109716	2926V491	1.80
109717	2926V521	2.00
109719	2926V546	1.90
109720	2926V574	2.10
109721	2926V721	2.20
109722	2926V606	2.10
109723	2926V616	2.30
109740	2926V636	2.30
109724	2926V724	2.40
109725	2926V666	2.40
109726	2926V726	2.40
109727	2926V706	2.60
109728	2926V726	2.80
109729	2926V776	2.80
109730	2926V786	2.90
109731	2926V834	2.90
109732	2926V856	3.10
109733	2926V891	3.52

Part No.	Descr.	Wt.
109734	2926V906	3.30
109735	2926V966	3.50
109736	2926V1006	3.70
109745	3226V392	1.50
109262	3226V439	1.99
109764	3226V450	2.00
109750	3226V465	2.00
109751	3226V505	2.20
3200 SERIES		
109752	3226V514	2.20
109753	3226V545	2.30
109754	3226V585	2.50
109040	3226V603	2.40
109263	3226V650	2.93
109041	3226V663	2.80
109042	3226V723	3.10
109043	3226V783	3.40
109044	3226V843	3.60
109760	3226V903	3.90
109761	3226V963	4.10
109763	3226V1083	4.60
109766	3230V419	2.10
109772	3230V670	3.40
109774	3230V710	3.60
109803	3236V369	1.60
109805	3236V432	1.90
109807	3326V478	2.40
3400 SERIES		
109822	3432V450	2.13
109809	3432V456	2.10
109808	3432V480	2.27
109810	3432V484	2.20
109269	3432V534	2.52
3600 SERIES		
109817	3636V479	2.50
3700 SERIES		
109821	3726V558	3.40
3800 SERIES		
109824	3826V465	2.60
109826	3830V510	3.10
109827	3830V517	3.20
109835	3830V580	6.60
109828	3830V587	3.30
109830	3836V418	2.00
109831	3836V426	2.10
109832	3836V654	3.50
109833	3836V734	3.90
109834	3836V794	4.40
4000 SERIES		
109836	4030V538	3.40
109840	4036V541	3.50
109841	4036V547	3.60
4200 SERIES		
109843	4230V556	3.30
109844	4230V605	3.60
4400 SERIES		
109846	4430V510	3.70
109847	4430V530	3.80
109848	4430V548	3.90
109849	4430V555	4.00
109851	4430V570	4.10

DRIVE COMPONENT ACCESSORIES

Wide Range Belts (cont)

Part No.	Descr.	Wt.
4400 Series (Continuied)		
109852	4430V578	4.20
109854	4430V610	4.30
109855	4430V630	4.40
109856	4430V660	4.50
109857	4430V670	4.70
109858	4430V690	4.90
109050	4430V700	4.80
109861	4430V710	5.10
109862	4430V730	5.40
109863	4430V740	5.30
4430 SERIES		
109865	4430V760	5.40
109051	4430V790	6.00
109052	4430V850	6.30
109053	4430V910	6.90
109054	4430V970	6.70
109875	4430V1030	7.50
109877	4430V877	8.40
109879	4430V1150	8.10
109882	4430V1320	9.30
109885	4430V1610	11.40

Part No.	Descr.	Wt.
109886	4436V525	3.70
109887	4436V551	3.90
109889	4436V561	4.00
109890	4436V576	4.10
109892	4436V646	4.70
4600 SERIES		
109894	4626V596	4.90
109896	4630V650	5.90
109897	4630V663	6.00
109901	4630V733	7.39
109904	4636V613	5.60
4800 SERIES		
109906	4830V602	4.70
109908	4830V653	5.10
109910	4830V699	5.50
109916	4836V588	4.60
109918	4836V618	4.90
109920	4836V655	5.20
109057	4836V670	5.99
109927	4836V850	6.70
109066	4836V1180	11.52

Part No.	Descr.	Wt.
5100 SERIES		
109825	5130V732	8.44
109935	5228V930	9.70
109936	5230V734	7.80
109829	5230V867	10.16
5600 SERIES		
109939	5636V750	8.20
109940	5636V774	8.40
3230HV SERIES		
109789	3230HV528	2.60
109790	3230HV553	2.80
109791	3230HV570	2.90
109792	3230HV585	2.90
109793	3230HV603	3.20
109794	3230HV613	3.10
109795	3230HV620	3.10
109796	3230HV626	3.10
109797	3230HV644	3.20
109802	3230HV656	3.88
109798	3230HV670	3.40
109799	3230HV685	3.50

Part No.	Descr.	Wt.
109800	3230HV702	3.50
109801	3230HV723	3.60
109806	3230HV821	4.85
109814	3230HV856	5.05
109816	3230HV931	5.49

TAPER-LOCK FLAT FACE PULLEYS

The TAPER-LOCK flat face pulley was designed primarily to be used with adjustable speed drives using wide range belts. They are made of quality gray iron and are carefully static balanced.

TAPER-LOCK bushings grip the shaft but can be easily removed. One of the outstanding features is that they go from “shelf-to-shaft” without costly reboring, keyseating or machining.

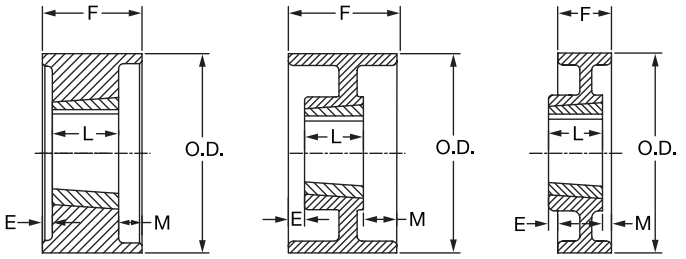

O.D.	Part No.	Description	Wt.	* Type	DIMENSIONS L	E	M
2 .5” FACE WIDTH							
5	**330250**	5 X 2.5–2012	4.6	A–1	1.25	0.25	1.0
6	**330251**	6 X 2.5–2012	8.1	A–1	1.25	0.25	1.0
7	**330252**	7 X 2.5–2012	8.0	B–2	1.25	0.38	0.88
8	**330253**	8 X 2.5–2012	9.0	B–2	1.25	0.38	0.88
9	**330254**	9 X 2.5–2012	13.5	B–2	1.25	0.44	0.81
10	**330255**	10 X 2.5–2012	16.3	B–2	1.25	0.44	0.81
11	**330256**	11 X 2.5–2012	17.9	B–3	1.25	0.44	0.81
12	**330257**	12 X 2.5–2012	19.6	B–3	1.25	0.44	0.81
14	**330258**	14 X 2.5–3020	23.4	C–3	2.0	0.38	0.88
16	**330259**	16 X 2.5–3020	30.8	C–3	2.0	0.38	0.88
18	**330260**	18 X 2.5–3020	35.3	C–3	2.0	0.38	0.88
20	**330261**	20 X 2.5–3020	44.8	C–3	2.0	0.44	0.94
3.25” FACE WIDTH							
10	**330262**	10 X 3.25–2012	18.2	B–3	1.25	0.81	1.19
11	**330263**	11 X 3.25–2012	20.5	B–3	1.25	0.81	1.19
12	**330264**	12 X 3.25–2012	22.4	B–3	1.25	0.81	1.19
14	**330265**	14 X 3.25–3020	28.4	B–3	2.00	0.06	1.19
16	**330266**	16 X 3.25–3020	39.4	B–3	2.00	0.06	1.19
18	**330267**	18 X 3.25–3020	38.5	B–3	2.00	0.13	1.13
20	**330268**	20 X 3.25–3020	48.8	B–3	2.00	0.13	1.13
22	**330269**	22 X 3.25–3020	51.8	B–3	2.00	0.06	1.19
24	**330270**	24 X 3.25–3020	58.3	B–3	2.00	0.13	1.13
4.25” FACE WIDTH							
12	**330271**	12 x 4.25–3020	26.2	B–3	2.0	0.06	2.19
14	**330272**	14 x 4.25–3020	26.2	B–3	2.0	0.13	2.13
16	**330273**	16 x 4.25–3020	36.0	B–3	2.0	0.13	2.13
18	**330274**	18 x 4.25–3020	41.7	B–3	2.0	0.13	2.13
20	**330279**	20 x 4.25–3020	44.3	B–3	2.0	0.13	2.13
22	**330275**	22 x 4.25–3020	55.8	B–3	2.0	0.13	2.13
24	**330276**	24 x 4.25–3020	59.3	B–3	2.0	0.13	2.13

* Sheave Type: -1 = Block, -2 = Web, -3 = Arm

DODGE Motor Bases

TYPE A SLIDE MOTOR BASES

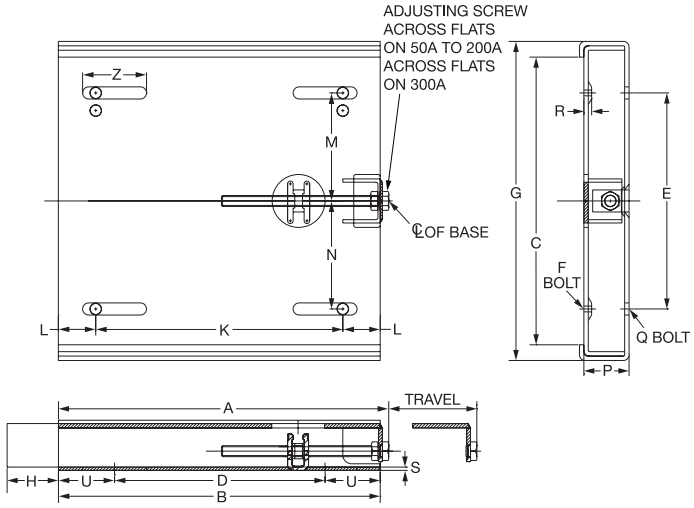

Type A Motor Bases are fabricated of steel which offers a base of rugged design, compact and smooth in appearance. These bases, which are designed to provide adequate travel, are fully adjustable by the use of a single adjusting screw and have elongated mounting holes in the base plate.

Order by base number. Bases are tapped to receive popular NEMA frames and can be tapped on order for others by specifying the frame size required. See table below.

Base No. Part No.	NEMA Motor Frame No. 1750 RPM	NEMA Motor Frame No. 1160 RPM	Travel	A	B	C	D	E	F *	G	H	K	L
50A **122120**	213	213, 213T	4.75	11.25	10.75	9.38	7.44	7	3/8	10.25	2.06	8.5	1.13
	215	215							3/8			8.5	1.13
	182T*	182T*							3/8			7.5	1.63
	184T*	184T*							3/8			7.5	1.63
100A **122121**	254, 254U	254, 254U, 254T	4.75	13.5	13	12.81	8.25	10	1/2	14.25	2.38	10	1.5
	256U	256U							1/2			10	1.5
	213T*	.....							3/8			8.5	2.25
	215T*	215T*							3/8			5.5	2.25
200A **122122**	284, 284U, 284T	284, 284U, 284T	6.88	16.75	16.25	15.81	11.50	12	1/2	17.25	3.38	11	2.63
	286U, 286T	286U, 286T							1/2			11	2.63
	324, 324U	324, 324U							5/8			12.5	1.88
	326, 326U	326, 326U							5/8			12.5	1.88
	254T*	.....							1/2			10	3.13
	256T*	256T*							1/2			10	3.13
300A **122123**	364, 364U	364, 364U	6.25	18.88	18.25	16.31	11.88	12.25	5/8	18.13	3.25	14	2.13
	365	365							5/8			14	2.13
	324T*	324T*							5/8			12.5	2.88

Base No. Part No.	M	N	P	Q	S	U	Z
50A **122120**	2.0	3.5	1.75	.38	.13	1.66	1.69
	3.5	3.5					
	2.75	1.75					
	2.75	2.75					
100A **122121**	3.25	5.0	2	.68	.19	2.38	2.5
	5.0	5.0					
	2.75	2.75					
	3.5	3.5					
200A **122122**	5.25	4.25	2.25	.68	.19	2.38	2.5
	5.25	5.75					
	4.5	6.0					
	6.0	6.0					
	4.75	3.5					
	4.75	5.25					
300A **122123**	5.13	6.13	2.5	.68	.25	3.19	3.63
	6.13	6.13					
	5.63	4.83					

* Bases are tapped with national coarse threads for those motor frames not marked with an asterisk. Bases for motor frames marked with an asterisk will be drilled and tapped on order at an extra charge and will require "F" diameter bolts and nuts – when ordering specify NEMA motor frame size.

DRIVE COMPONENT ACCESSORIES

DODGE®

DODGE Motor Bases

TYPE B SLIDE MOTOR BASES

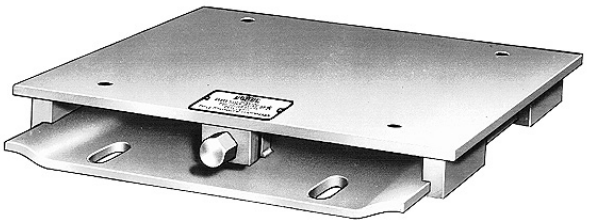

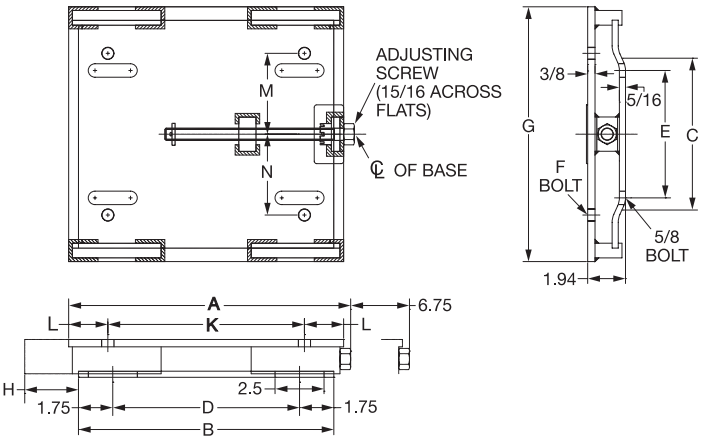

Type B Motor Bases are made of fabricated steel and include all of the same quality features as the Type A bases. Type B bases were primarily designed to be used where a base of heavier construction is required.

Order by base number. Bases are tapped to receive popular NEMA frames and can be tapped on order for others by specifying the frame size required. See table below.

Base No. Part No.	NEMA Motor Frame No. 1750 RPM	NEMA Motor Frame No. 1160 RPM	Wt.	A	B	C	D	E	F *	G	H	K	L	M	N
11B **122114**	254, 254U	254, 254U	37	14.38	13	9.25	9.5	6.5	1/2	13	3.88	10.0	2.0	4.13	4.13
	215*	215*, 215T*							3/8			8.5	2.75	3.5	3.5
	184T*	184T*							3/8			7.5	3.25	2.75	2.75
	213T*	213T*							3/8			8.5	2.75	2.75	2.75
22B **122115**	284, 284U	284, 284U	37	14.38	13	9.25	9.5	6.5	1/2	13	3.88	11.0	1.5	4.75	4.75
	256U*	256U*, 265T*							1/2			10.0	2.0	5.0	5.0
	215T*	.....							3/8			8.5	2.75	3.5	3.5
	254T*	254T*							1/2			10.0	2.0	4.13	4.13
33B **122116**	324, 324U	324, 324U	48	16.38	14	11.5	10.5	7.75	5/8	15.75	4.38	12.5	1.75	5.25	5.25
	326, 326U	326, 326U							5/8			12.5	1.75	6.0	6.0
	286U*, 286T*	286U*, 286T*							1/2			11.0	2.5	5.5	5.5
	256T*	.....							1/2			10.0	3.0	5.0	5.0
	284T*	284T*							1/2			11.0	2.5	4.15	4.75
45B **122118**	364, 364U	364, 364U	56	18.38	16	12.25	12.5	8	5/8	16.5	4.38	14.0	2.0	5.13	6.13
	365	365							5/8			14.0	2.0	6.13	6.13
	324T*	324T*							5/8			12.5	2.75	5.75	4.75

* Bases are tapped with national coarse threads for those motor frames not marked with an asterisk.
Bases for motor frames marked with an asterisk will be drilled and tapped on order at an extra charge and will require "F" diameter bolts and nuts – when ordering specify NEMA motor frame size.

Shaft Collars

Solid Steel Shaft Collars

Shaft Size	Part Number Steel	Part Number Stainless	Dimensions O.D.	Dimensions Width	Dimensions Screw	Dimensions Wt.
1/8	–	**456225**	3/8	1/4	#6	0.01
3/16	**040001**	**456226**	7/16	1/4	#8	0.01
1/4	**040002**	**456227**	1/2	5/16	#10	0.01
5/16	**040003**	**456228**	5/8	5/16	#10	0.02
3/8	**040004**	**456229**	3/4	3/8	1/4	0.03
7/16	**040005**		7/8	7/16	1/4	0.05
1/2	**040006**	**456230**	1	7/16	1/4	0.07
9/16	**040007**		1	7/16	1/4	0.06
5/8	**040008**	**456231**	1-1/8	1/2	5/16	0.09
11/16	**040009**		1-1/4	9/16	5/16	0.13
3/4	**040010**	**456232**	1-1/4	9/16	5/16	0.12
13/16	**040011**		1-1/4	9/16	5/16	0.11
7/8	**040012**	**456233**	1-1/2	9/16	5/16	0.18
15/16	**040013**		1-1/2	9/16	5/16	0.17
1	**040014**	**456234**	1-1/2	5/8	5/16	0.17
1-1/16	**040015**		1-3/4	5/8	5/16	0.26
1-1/8	**040016**	**456235**	1-3/4	5/8	5/16	0.24
1-3/16	**040017**		2	11/16	3/8	0.38
1-1/4	**040018**	**456236**	2	11/16	3/8	0.36
1-5/16	**010019**		2-1/8	11/16	3/8	0.41
1-3/8	**040020**		2-1/8	3/4	3/8	0.42
1-7/16	**040021**		2-1/4	3/4	3/8	0.48
1-1/2	**040022**	**456237**	2-1/4	3/4	3/8	0.45
1-9/16	**040023**		2-1/2	13/16	3/8	0.67
1-5/8	**040024**		2-1/2	13/16	3/8	0.63
1-11/16	**040025**		2-1/2	13/16	3/8	0.59
1-3/4	**040026**	**456238**	2-5/8	7/8	1/2	0.71
1-7/8	**040027**		2-3/4	7/8	1/2	0.76
1-15/16	**040028**		3	7/8	1/2	0.98
2	**040029**	**456239**	3	7/8	1/2	0.93
2-3/16	**040030**		3-1/4	15/16	1/2	1.16
2-1/4	**040031**		3-1/4	15/16	1/2	1.11
2-7/16	**040032**		3-1/2	1	1/2	1.36
2-1/2	**040033**		3-1/2	1	1/2	1.30
2-15/16	**040034**		4	1-1/8	1/2	1.83

Bore Tolerance

Bore	Tolerance
1/8 - 1/2	+0.0005/+0.0025
9/16 - 2	+0.0005/+0.0030
>2	+0.0010/+0.0040

Solid Iron Shaft Collars

Shaft Size	Part Number	Dimensions O.D.	Dimensions Width	Dimensions Wt.
1-15/16	**010020**	3-3/8	1-3/8	1.75
2	**010021**	3-3/8	1-3/8	1.75
2-3/16	**010024**	3-3/4	1-3/8	3
2-7/16	**010028**	4-1/4	1-1/2	3
2-1/2	**010029**	4-1/4	1-1/2	3
2-11/16	**010032**	4-3/4	1-1/2	5
2-15/16	**010036**	5	1-5/8	5
3-3/16	**010039**	5-1/2	1-5/8	7
3-7/16	**010043**	5-3/4	1-3/4	8
3-15/16	**010048**	6-1/2	1-7/8	10.5
4-7/16	**010051**	7-1/4	2	13.5
4-15/16	**010054**	8	2-1/8	17
5-7/16	**010055**	8-3/4	2-1/8	20
5-15/16	**010056**	9-1/4	2-1/4	22
6	**010057**	9-1/4	2-1/4	22
6-1/2	**010058**	10	2-1/4	25
7	**010059**	10-1/2	2-3/8	30
7-1/2	**010060**	11-3/8	2-1/2	35
8	**010061**	12-1/8	2-7/8	45

Bore Tolerance

Bore	Tolerance
<1-1/2	+0.002/+0.004
1-9/16 - 2-1/2	+0.003/+0.005
2-9/16 - 4	+0.003/+0.006
4-1/16 - 6	+0.003/+0.007
6-1/16 - 8	+0.004/+0.008

Split Iron Shaft Collars

Shaft Size	Part Number	Dimensions O.D.	Dimensions Width	Dimensions Wt.
1-1/8	**010075**	3-1/8	1-1/4	1.3
1-3/16	**010076**	3-1/8	1-1/4	1.3
1-1/4	**010077**	3-1/8	1-1/4	1.3
1-5/16	**010078**	3-3/8	1-7/16	1.5
1-7/16	**010080**	3-3/8	1-7/16	1.5
1-1/2	**010081**	3-3/8	1-7/16	1.5
1-11/16	**010084**	3-3/4	1-9/16	2.3
1-3/4	**010085**	3-3/4	1-9/16	2.3
1-15/16	**010088**	4-1/16	1-3/4	2.8
2	**010089**	4-1/16	1-3/4	2.8
2-3/16	**010092**	4-1/2	1-7/8	3.0
2-1/4	**010093**	4-1/2	1-7/8	3.0
2-7/16	**010096**	4-7/8	2	4.0
2-1/2	**010097**	4-7/8	2	4.0
2-11/16	**010100**	5-5/16	2-1/16	5.0
2-15/16	**010104**	5-5/8	2-5/16	5.8
3	**010105**	5-5/8	2-5/16	5.8
3-3/16	**010107**	6-1/16	2-3/8	8.5
3-7/16	**010110**	6-7/8	2-9/16	9.8
3-11/16	**010112**	6-13/16	2-5/8	10.0
3-15/16	**010114**	7-3/16	2-3/4	11.0
4-7/16	**010117**	8-1/8	3-5/16	16.5
4-15/16	**010120**	8-3/4	3-1/2	20.5
5-7/16	**010123**	9-5/8	3-3/4	28.0
5-15/16	**010126**	10-1/8	4-1/16	30.0
6	**010127**	10-1/8	4-1/16	30.0
6-1/2	**010128**	11	4-1/4	41.0
7	**010129**	12	4-1/2	46.0
7-1/2	**010130**	12-15/16	4-11/16	56.0
8	**010131**	13-5/8	5-1/16	69.0

Bore Tolerance

Bore	Tolerance
<1-1/2	+0.002/+0.004
1-9/16 - 2-1/2	+0.003/+0.005
2-9/16 - 4	+0.003/+0.006
4-1/16 - 6	+0.003/+0.007
6-1/16 - 8	+0.004/+0.008

DRIVE COMPONENT ACCESSORIES

DODGE®

Adjustable NEMA Motor Bases

DODGE Adjustable motor bases provide a convenient method for mounting standard NEMA-frame motors. Hex- screw “E” is used to adjust the drive center distance over range “K” for tensioning V-Belt and Synchronous belt drives. Once the drive is tensioned, bolts “J” are tightened for a secure, stable mounting of the motor.

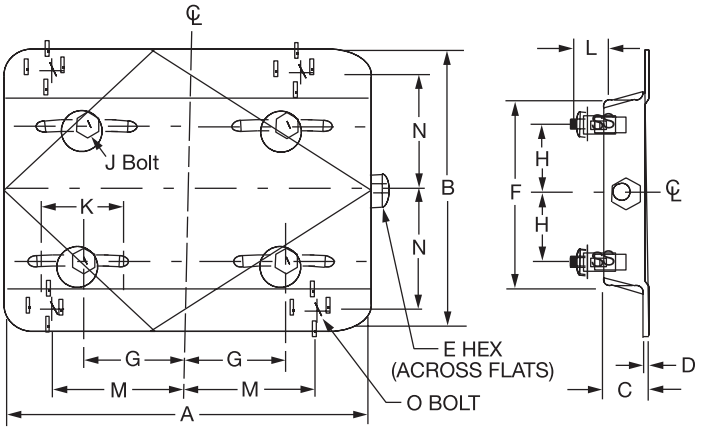

Style A

Style B

Base No.	Part No.	Wt.	Style	Dimensions											Bolt Dimensions			
				A	B	C	D	F	G	H	K	L	M	N	Adj.	Hex	J	O
56	**122090**	3.0	A	10.63	6.50	1.13	0.08	4.50	2.44	1.50	3.00	0.87	3.81	2.88	3/8	9/16	5/16	3/8
143	**122091**	5.0	A	10.50	7.50	1.13	0.12	5.50	2.75	2.00	3.00	0.81	3.75	3.38	3/8	9/16	5/16	3/8
145	**122092**	6.0	A	10.50	8.50	1.13	0.12	6.50	2.75	2.50	3.00	0.81	3.75	3.88	3/8	9/16	5/16	3/8
182	**122093**	9.0	A	12.75	9.50	1.50	0.13	6.50	3.75	2.25	3.00	1.25	4.50	4.25	1/2	3/4	3/8	1/2
184	**122094**	9.5	A	12.75	10.50	1.50	0.13	7.50	3.75	2.75	3.00	1.25	4.50	4.75	1/2	3/4	3/8	1/2
213	**122095**	13.5	A	15.00	11.00	1.75	0.16	7.50	4.25	2.75	3.50	1.25	5.25	4.75	1/2	3/4	3/8	1/2
215	**122096**	15.5	A	15.00	12.50	1.75	0.16	9.00	4.25	3.50	3.50	1.25	5.25	5.50	1/2	3/4	3/8	1/2
254	**122097**	17.5	B	17.75	15.13	2.00	0.19	10.75	5.00	4.13	4.00	1.44	6.25	6.63	5/8	15/16	1/2	5/8
256	**122098**	18.5	B	17.75	16.88	2.00	0.19	12.50	5.00	5.00	4.00	1.44	6.25	7.50	5/8	15/16	1/2	5/8
284	**122099**	21.0	B	19.75	16.88	2.00	0.19	12.50	5.50	4.75	4.50	1.69	7.00	7.50	5/8	15/16	1/2	5/8
286	**122100**	22.0	B	19.75	18.38	2.00	0.19	14.00	5.50	5.50	4.50	1.69	7.00	8.25	5/8	15/16	1/2	5/8
324	**122101**	31.0	B	22.75	19.25	2.50	0.19	14.00	6.25	5.25	5.25	2.19	8.00	8.25	3/4	1-1/8	5/8	3/4
326	**122102**	32.0	B	22.75	20.75	2.50	0.19	15.50	6.25	6.00	5.25	2.19	8.00	9.25	3/4	1-1/8	5/8	3/4
364	**122103**	44.0	B	25.50	20.50	2.50	0.25	15.50	7.00	5.63	6.00	2.06	9.00	9.13	3/4	1-1/8	5/8	3/4
365	**122104**	45.0	B	25.50	21.50	2.50	0.25	16.50	7.00	6.13	6.00	2.06	9.00	9.63	3/4	1-1/8	5/8	3/4

CONTENTS

DYNA-SYNC® Drives

Features/Benefits PT10-2

Specification: Pulleys

XL Pitch. PT10-3
L Pitch. PT10-4
H Pitch PT10-6
XH Pitch PT10-7
Reborable PT10-9

Specification: Belts

Dual DYNA-SYNC. PT10-11
XL Pitch. PT10-12
L Pitch. PT10-12
H Pitch PT10-13
XH Pitch PT10-13
XXH Pitch PT10-13

Selection. PT10-14
XL Pitch. PT10-18
L Pitch. PT10-24
H Pitch PT10-30
XH Pitch PT10-36
Basic HP Ratings PT10-43

Engineering/Technical

Dimensions, Tolerances PT10-44
Installation. PT10-45
Tensioning. PT10-45
Belt Working Tension PT10-45

Part Number Index INDEX-1

Keyword Index INDEX-43

FEATURES/BENEFITS

DYNA-SYNC Drives

The Original Timing Drive

- **Synchronized No-Slip Transmission**
- **No Lubrication Required**
- **Efficiency: Approximately 98%**
- **Low Maintenance**
- **Virtually No Backlash**
- **Constant Linear Velocity**
- **Drive Ratios to 8.5:1**
- **Pitches: XL, L, H, and XH**

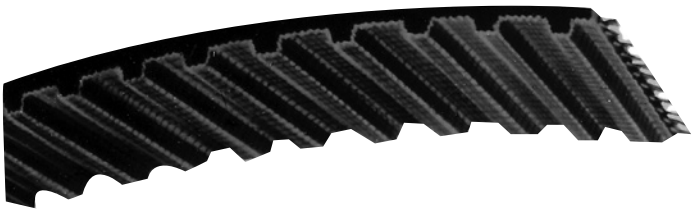

DYNA-SYNC Pulley

- **Clean, Compact TAPER-LOCK Design**
- **Easy-on/Easy-off**
- **Precision Manufactured in ISO9000 Certified Plant**
- **Flanged Design Standard on Driver Sizes**

- Tough, Tensile Cords, No-Stretch Fiberglass
- Durable Neoprene Rubber Body
- Long-Wearing Nylon Duck Facing
- Oil, Heat, and Ozone Resistant

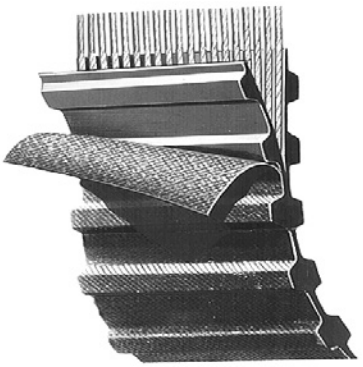

- Dual-Sided Teeth Available for Serpentine Drives

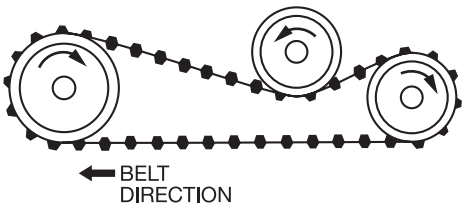

DYNA-SYNC Pulleys - XL, L PITCH

TAPER-LOCK

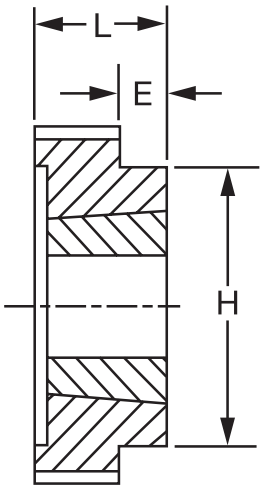

TAPER-LOCK

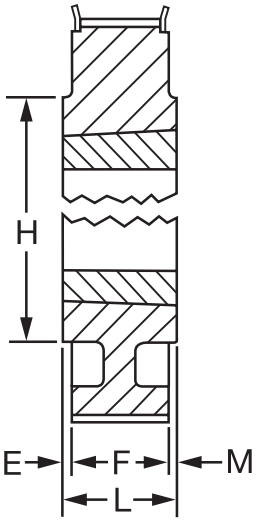

TYPE C

XL037 - 1/5" Pitch (.375" Wide Belt)

F= 0.56"

No. of Teeth	Description ◊	Part No.	Wt	Pitch Dia. (P.D.)	Max. Flg. O.D.	Type †	Brushed Bore Range Min.	Brushed Bore Range Max.	Dimensions E	Dimensions H	Dimensions L	Dimensions M
32	TL32XL037-1108	**113021**	.22	2.037	None	TL-1	1/2	1-1/8	–	2.02	0.88	0
36	TL36XL037-1108	**113022**	.30	2.292		TL-1	1/2	1-1/8	0.32	2.13	0.88	0
40	TL40XL037-1108	**113023**	.31	2.546		TL-1	1/2	1-1/8	0.32	2.25	0.88	0
42	TL42XL037-1108	**113024**	.31	2.674		TL-1	1/2	1-1/8	0.32	2.37	0.88	0
44	TL44XL037-1108	**113046**	.31	2.801		TL-1	1/2	1-1/8	0.32	2.63	0.88	0
48	TL48XL037-1108	**113047**	.38	3.056		TL-1	1/2	1-1/8	0.32	2.88	0.88	0
60	TL60XL037-1210	**113048**	.38	3.820		TL-1	1/2	1-1/4	0.44	3.50	1.00	0
72	TL72XL037-1610	**113049**	.50	4.584		TL-1	1/2	1-11/16	0.44	4.00	1.00	0

L050 - 3/8" Pitch (.5" Wide Belt)

F=0.75"

No. of Teeth	Description ◊	Part No.	Wt	Pitch Dia. (P.D.)	Max. Flg. O.D.	Type †	Brushed Bore Range Min.	Brushed Bore Range Max.	Dimensions E	Dimensions H	Dimensions L	Dimensions M
18	TL18L050-1108	**113575**	.45	2.149	2.39	CF-1	1/2	1-1/8	.13	1.63	.88	0
20	TL20L050-1108	**113581**	.68	2.387	2.63	CF-1	1/2	1-1/8	.13	1.81	.88	0
21	TL21L050-1108	**113399**	.80	2.507	2.87	CF-1	1/2	1-1/8	.13	2.00	.88	0
22	TL22L050-1108	**113588**	.90	2.626	2.87	CF-1	1/2	1-1/8	.13	2.06	.88	0
24	TL24L050-1210	**113464**	1.0	2.865	3.11	CF-1	1/2	1-1/4	.25	2.25	1.00	0
26	TL26L050-1210	**113466**	1.2	3.104	3.34	CF-1	1/2	1-1/4	.25	2.56	1.00	0
28	TL28L050-1210	**113468**	1.4	3.342	3.58	CF-1	1/2	1-1/4	.25	2.75	1.00	0
30	TL30L050-1610	**113470**	1.5	3.581	3.83	CF-1	1/2	1-11/16	.25	2.88	1.00	0
32	TL32L050-1610	**113472**	1.9	3.820	4.06	CF-1	1/2	1-11/16	.25	3.06	1.00	0
40	TL40L050-2012	**113478**	2.4	4.775	5.02	CF-1	1/2	2-1/8	.50	3.94	1.25	0
48	TL48L050-2012	**113484**	3.2	5.730	6.02	CF-1	1/2	2-1/8	.50	3.94	1.25	0
60	TL60L050-2012	**113485**	4.9	7.162	None	C-2	1/2	2-1/8	.25	4.38	1.25	.25
72	TL72L050-2012	**113486**	6.5	8.594		C-2	1/2	2-1/8	.25	4.38	1.25	.25
84	TL84L050-2517	**113487**	7.8	10.027		C-2	1/2	2-11/16	.50	4.38	1.75	.50

† Dash 1 = Block, 2 = Web, 3 = Arm. (See page PT10-3, V-Drives Section) Letter "F" indicates pulley is flanged.

◊ See page PT10-8 - PT10-10 for MPB sizes.

FEATURES/BENEFITS PAGE PT10-2	SPECIFICATIONS PAGE PT10-3	SELECTION PAGE PT10-14	ENGINEERING/TECHNICAL PAGE PT10-44

SPECIFICATIONS

DYNA-SYNC Pulleys - L PITCH

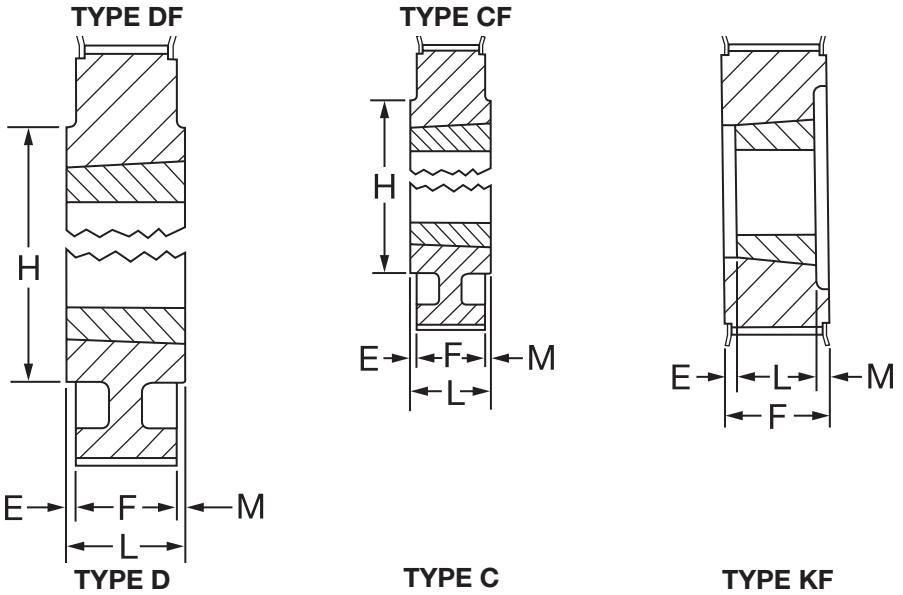

L075 - 3/8" Pitch (.75" Wide Belt) F=1.00"

No. of Teeth	Description ◊	Part No.	Wt	Pitch Dia. (P.D.)	Max. Flg. O.D.	Type †	Brushed Bore Range Min.	Brushed Bore Range Max.	Dimensions E	Dimensions H	Dimensions L	Dimensions M
18	TL18L075-1108	**113589**	.45	2.149	2.39	KF-1	1/2	1-1/8	.06	....	.88	.06
20	TL20L075-1108	**113594**	.68	2.387	2.63	KF-1	1/2	1-1/8	.06	....	.88	.06
22	TL22L075-1108	**113595**	.90	2.626	2.87	KF-1	1/2	1-1/8	.06	....	.88	.06
24	TL24L075-1210	**113513**	1.0	2.865	3.11	KF-1	1/2	1-1/4	0	....	1.00	....
26	TL26L075-1210	**113515**	1.2	3.104	3.34	KF-1	1/2	1-1/4	0	....	1.00	....
28	TL28L075-1610	**113517**	1.2	3.342	3.58	KF-1	1/2	1-11/16	0	....	1.00	....
30	TL30L075-1610	**113519**	1.5	3.581	3.83	KF-1	1/2	1-11/16	0	....	1.00	....
32	TL32L075-1610	**113521**	1.9	3.820	4.06	KF-1	1/2	1-11/16	0	....	1.00	....
40	TL40L075-2012	**113527**	2.4	4.775	5.02	CF-1	1/2	2-1/8	.25	3.94	1.25	0
48	TL48L075-2012	**113533**	3.2	5.730	6.02	CF-1	1/2	2-1/8	.25	3.94	1.25	0
60	TL60L075-2012	**113534**	4.9	7.162	**None**	C-2	1/2	2-1/8	.13	4.38	1.25	.13
72	TL72L075-2012	**113535**	6.5	8.594		C-1	1/2	2-1/8	.13	4.38	1.25	.13
84	TL84L075-2517	**113536**	7.8	10.027		C-1	1/2	2-11/16	.25	4.88	1.75	.50

L100 - 3/8" Pitch (1" Wide Belt) F=1.25"

No. of Teeth	Description ◊	Part No.	Wt	Pitch Dia. (P.D.)	Max. Flg. O.D.	Type †	Brushed Bore Range Min.	Brushed Bore Range Max.	Dimensions E	Dimensions H	Dimensions L	Dimensions M
18	TL18L100-1108	**113599**	.7	2.149	2.39	KF-1	1/2	1-1/8	.06	...	.87	.31
20	TL20L100-1108	**113641**	1.0	2.387	2.63	KF-1	1/2	1-1/8	.06	...	.87	.31
22	TL22L100-1108	**113669**	1.3	2.626	2.87	KF-1	1/2	1-1/8	.06	...	.87	.31
24	TL24L100-1210	**113562**	1.3	2.865	3.11	KF-1	1/2	1-1/4	.06	...	1	.19
26	TL26L100-1210	**113564**	1.7	3.104	3.34	KF-1	1/2	1-1/4	.06	...	1	.19
28	TL28L100-1610	**113566**	1.7	3.342	3.58	KF-1	1/2	1-11/16	.11	...	1	.15
30	TL30L100-1610	**113568**	2.2	3.581	3.83	KF-1	1/2	1-11/16	.11	...	1	.15
32	TL32L100-1610	**113570**	2.7	3.820	4.06	KF-1	1/2	1-11/16	.25	...	1	0
40	TL40L100-2012	**113576**	3.6	4.775	5.02	KF-1	1/2	2-1/8	0	...	1.25	....
48	TL48L100-2012	**113582**	5.1	5.730	6.02	KF-1	1/2	2-1/8	0	...	1.25	....
60	TL60L100-2012	**113583**	6.0	7.162		C-2	1/2	2-1/8	0	4.38	1.25	
72	TL72L100-2012	**113584**	8.0	8.594	**None**	C-2	1/2	2-1/8	0	4.38	1.25	....
84	TL84L100-2517	**113585**	9.2	10.027		C-1	1/2	2-11/16	.55	4.88	1.75	....

† Dash 1 = Block, 2 = Web, 3 = Arm.. (See page PT10-3, V-Drives Seciton) Letter "F" indicates pulley is flanged.

◊ See page PT10-8 - PT10-10 for MPB sizes.

DYNA-SYNC Pulleys - L, H

† **Dash 1 = Block, 2 = Web, 3 = Arm**
Letter "F" indicates pulley is flanged

\+ Available from stock in Min. Plain Bore (MPB) only
Max. bore is without keyway. (If keyway is used, reduce max bore listed by twice the keyway depth.)

◊ See page PT10-9 for additional MPB sizes

H100 - 1/2" Pitch (1" Wide Belt) (for H075 & H100 Belts) F=1.32"

No. of Teeth	Description ◊	Part No.	Wt.	Pitch Dia. (P.D.)	Max. Flg. O.D.	Type †	Bore Range Min.	Bore Range Max.	Dimensions E	Dimensions H	Dimensions L	Dimensions M
14	TL14H100-1108	**113678**	.8	2.228	2.48	KF-1	1/2	1-1/8	.06	....	.88	.42
16	TL16H100-1108	**113684**	1.3	2.546	2.80	KF-1	1/2	1-1/8	.06	....	.88	.42
18	TL18H100-1210	**113605**	1.2	2.865	3.11	KF-1	1/2	1-1/4	.06	....	1	.25
20	TL20H100-1210	**113608**	1.7	3.183	3.44	KF-1	1/2	1-1/4	.11	....	1	.25
22	TL22H100-1610	**113611**	1.8	3.501	3.75	KF-1	1/2	1-11/16	.11	....	1	.25
24	TL24H100-1610	**113642**	2.3	3.820	4.02	KF-1	1/2	1-11/16	.11	....	1	.25
26	TL26H100-2012	**113615**	2.2	4.138	4.39	KF-1	1/2	2-1/8	.06	....	1.25	0
28	TL28H100-2012	**113617**	2.8	4.456	4.70	KF-1	1/2	2-1/8	.06	....	1.25	0
30	TL30H100-2012	**113620**	4.2	4.775	5.02	KF-1	1/2	2-1/8	.06	....	1.25	0
32	TL32H100-2517	**113623**	4.1	5.093	5.33	CF-1	1/2	2-11/16	.44	4.44	1.75	0
40	TL40H100-2517	**113629**	7.8	6.366	6.58	CF-1	1/2	2-11/16	.44	4.44	1.75	0
48	TL48H100-2517	**113635**	12.1	7.639	8.02	CF-1	1/2	2-11/16	.44	4.44	1.75	0
60	TL60H100-3020	**113636**	10.3	9.549		C-2	7/8	3-1/4	.34	6.25	2	.34
72	TL72H100-3020	**113637**	14	11.459		C-1	7/8	3-1/4	.34	6.25	2	.34
84	TL84H100-3020	**113638**	20	13.369	**None**	C-2	7/8	3-1/4	.34	6.25	2	.34
96	TL96H100-3020	**113639**	27	15.279		C-2	7/8	3-1/4	.34	6.25	2	.34
120	TL120H100-3020	**113640**	38	19.099		C-3	7/8	3-1/4	0	6.25	2	.59

H150 - 1/2" Pitch (1.5" Wide Belt) F=1.86"

No. of Teeth	Description ◊	Part No.	Wt.	Pitch Dia. (P.D.)	Max. Flg. O.D.	Type †	Bore Range Min.	Bore Range Max.	Dimensions E	Dimensions H	Dimensions L	Dimensions M
14	TL14H150-1108	**113691**	1.0	2.228	2.48	KF-1	1/2	1	.47	....	.88	.88
16	TL16H150-1108	**113692**	1.5	2.546	2.80	KF-1	1/2	1	.47	....	.88	.88
18	TL18H150-1210	**113693**	1.6	2.865	3.11	KF-1	1/2	1-1/4	.11	....	1	.75
20	TL20H150-1210	**113694**	2.2	3.183	3.44	KF-1	1/2	1-1/4	.11	....	1	.75
22	TL22H150-1610	**113695**	2.5	3.501	3.75	KF-1	1/2	1-11/16	.11	....	1	.75
24	TL24H150-2012	**113663**	2.2	3.820	4.06	KF-1	1/2	2-1/8	.56	....	1.25	0
26	TL26H150-2012	**113665**	3.2	4.138	4.78	KF-1	1/2	2-1/8	.56	....	1.25	0
28	TL28H150-2012	**113667**	4.1	4.456	4.70	KF-1	1/2	2-1/8	.56	....	1.25	0
30	TL30H150-2012	**113670**	5.1	4.775	5.02	KF-1	1/2	2-1/8	.56	....	1.25	0
32	TL32H150-2517	**113673**	4.6	5.093	5.33	KF-1	1/2	2-11/16	.11	....	1.75	0
40	TL40H150-2517	**113679**	8.6	6.366	6.58	KF-1	1/2	2-11/16	.11	....	1.75	0
48	TL48H150-2517	**113685**	13.6	7.639	8.02	AF-2	1/2	2-11/16	0	....	1.75	.06
60	TL60H150-3020	**113686**	12.3	9.549		C-2	7/8	3-1/4	.09	6.25	2	.09
72	TL72H150-3020	**113687**	17.0	11.459		C-2	7/8	3-1/4	.09	6.25	2	.09
84	TL84H150-3020	**113688**	21.5	13.369	**None**	C-3	7/8	3-1/4	.09	6.25	2	.09
96	TL96H150-3020	**113689**	31	15.279		C-3	7/8	3-15/16	.09	6.25	2	.09
120	TL120H150-3020	**113690**	40	19.099		C-3	7/8	3-1/4	.09	6.25	2	.09

SPECIFICATIONS

DYNA-SYNC Pulleys - H

TYPE DF

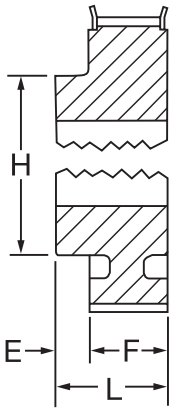

TYPE D

TYPE CF

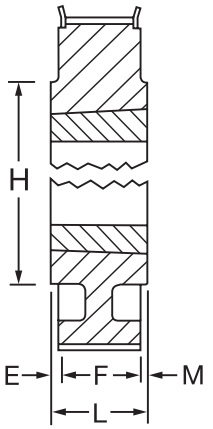

TYPE C

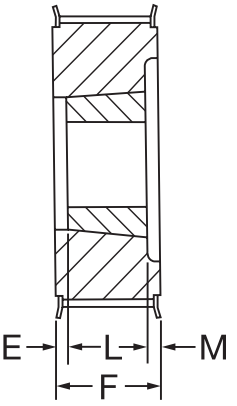

TYPE KF

TYPE AF

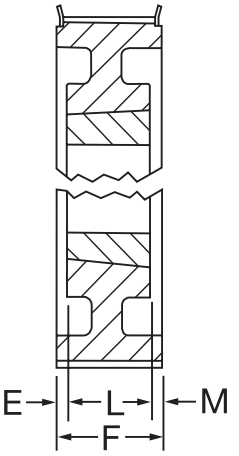

TYPE A

H200 - 1/2" Pitch (2" Wide Belt) — F=2.34"

No. of Teeth	Description ◊	Part No.	Wt.	Pitch Dia. (P.D.)	Max. Flg. O.D.	Type †	Bore Range Min.	Bore Range Max.	Dimensions E	Dimensions H	Dimensions L	Dimensions M
16	TL16H200-1108	**113072**	1.9	2.546	2.80	KF-1	1/2	1-1/8	.75	0	.88	.72
18	TL18H200-1215	**113704**	1.8	2.865	3.11	KF-1	1/2	1-1/4	.44	0	1.5	.41
20	TL20H200-1215	**113707**	2.6	3.183	3.44	KF-1	1/2	1-1/4	.42	0	1.5	.42
22	TL22H200-1615	**113710**	28	3.501	3.75	KF-1	1/2	1-5/8	.42	0	1.5	.42
24	TL24H200-2012	**113712**	2.6	3.820	4.06	KF-1	1/2	2	.55	0	1.25	.55
26	TL26H200-2012	**113714**	3.6	4.138	4.78	KF-1	1/2	2	.55	0	1.25	.55
28	TL28H200-2012	**113716**	5.1	4.456	4.70	KF-1	1/2	2	.55	0	1.25	.55
30	TL30H200-2012	**113719**	7.0	4.775	5.02	KF-1	1/2	2	1.09	0	1.25	0
32	TL32H200-2517	**113722**	5.5	5.093	5.33	KF-1	1/2	2-1/2	.59	0	1.75	0
40	TL40H200-2517	**113728**	9.9	6.366	6.58	KF-1	1/2	2-1/2	.59	0	1.75	0
48	TL48H200-3020	**113734**	14.3	7.639	8.02	KF-1	7/8	3	.41	0	2	0
60	TL60H200-3020	**113735**	15.3	9.549		A-2	7/8	3	.17	0	2	.17
72	TL72H200-3020	**113736**	21	11.459		A-2	7/8	3-1/4	0	0	2	.34
84	TL84H200-3020	**113737**	23	13.369	**None**	A-3	7/8	3-1/4	0	0	2	.34
96	TL96H200-3535	**113738**	34	15.279		C-3	1-3/16	3-15/16	.40	7.0	3.5	.75
120	TL120H200-3020	**113739**	42	19.099		A-3	7/8	3-1/4	0	0	2	.34

H300 - 1/2" Pitch (3" Wide Belt) — F=3.38"

No. of Teeth	Description ◊	Part No.	Wt	Pitch Dia. (P.D.)	Max. Flg. O.D.	Type †	Brushed Bore Range Min.	Brushed Bore Range Max.	Dimensions E	Dimensions H	Dimensions L	Dimensions M
16	TL16H300-1108	**113073**	2.5	2.546	2.80	KF-1	1/2	1-1/8	1.28	0	.87	1.23
18	TL18H300-1215	**113752**	2.6	2.865	3.11	KF-1	1/2	1-1/4	.94	0	1.5	.94
20	TL20H300-1215	**113755**	3.9	3.183	3.44	KF-1	1/2	1-1/4	.94	0	1.5	.94
22	TL22H300-1615	**113758**	4.0	3.501	3.75	KF-1	1/2	1-11/16	.94	0	1.5	.94
24	TL24H300-2012	**113760**	4.3	3.820	4.06	KF-1	1/2	2-1/8	1.06	0	1.25	1.06
26	TL26H300-2012	**113762**	5.4	4.138	4.78	KF-1	1/2	2-1/8	1.06	0	1.25	1.06
28	TL28H300-2012	**113764**	6.8	4.456	4.70	KF-1	1/2	2-1/8	1.06	0	1.25	1.06
30	TL30H300-2012	**113767**	7.5	4.775	5.02	KF-1	1/2	2-1/8	1.06	0	1.25	1.06
32	TL32H300-2517	**113770**	7.4	5.093	5.33	KF-1	1/2	2-11/16	.81	0	1.75	.81
40	TL40H300-2517	**113776**	12.1	6.366	6.58	KF-1	1/2	2-11/16	.81	0	1.75	.81
48	TL48H300-3020	**113782**	16.3	7.639	8.02	KF-1	7/8	3-1/4	.69	0	2	.69
60	TL60H300-3020	**113783**	17.3	9.549		A-2	7/8	3-1/4	.69	0	2	.69
72	TL72H300-3020	**113784**	23	11.459		A-2	7/8	3-1/4	.31	0	2	1.06
84	TL84H300-3020	**113785**	30	13.369	**None**	A-3	7/8	3-1/4	.69	0	2	.69
96	TL96H300-3535	**113786**	38	15.279		C-3	1-3/16	3-15/16	.06	0	3.5	.06
120	TL120H300-3535	**113787**	51	19.099		C-3	1-3/16	3-15/16	.125	7.0	3.5	0

† Dash 1 = Block, 2 = Web, 3 = Arm. Letter "F" indicates pulley is flanged.

◊ See page PT10-8 - PT10-10 for MPB sizes.

DYNA-SYNC Pulleys - XH

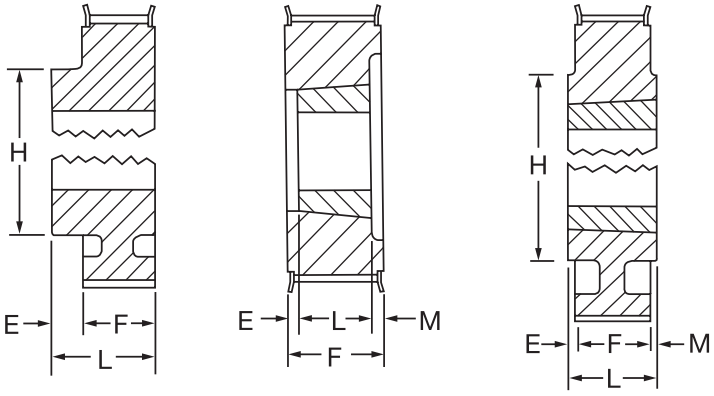

XH200 - 7/8" Pitch (2" Wide Belt) F=2.56"

No. of Teeth	Description ◊	Part No.	Wt.	Pitch Dia. (P.D.)	Max. Flg. O.D.	Type †	Bore Range Min.	Bore Range Max.	Dimensions E	Dimensions H	Dimensions L	Dimensions M
18	TL18XH200-2012	**113074**	12	5.013	5.58	KF-1	1/2	2-1/8	.84	...	1.25	.47
20	TL20XH200-2012	**113120**	16	5.570	6.11	KF-1	1/2	2-1/8	.84	...	1.25	.47
22	TL22XH200-2517	**113804**	10.6	6.127	6.59	KF-1	1/2	2-11/16	.81	....	1.75	0
24	TL24XH200-3020	**113807**	11.3	6.685	7.28	KF-1	7/8	3-1/4	.56	....	2.0	0
26	TL26XH200-3020	**113810**	13.3	7.241	7.78	KF-1	7/8	3-1/4	.56	....	2.0	0
28	TL28XH200-3535	**113813**	13.5	7.799	8.27	CF-1	1-3/16	3-15/16	.94	6.50	3.5	0
30	TL30XH200-3535	**113816**	18.5	8.356	9.31	CF-1	1-3/16	3-15/16	.94	6.50	3.5	0
32	TL32XH200-3535	**113819**	21.5	8.913	9.52	CF-1	1-3/16	3-15/16	.94	6.50	3.5	0
40	TL40XH200-4040	**113822**	37.5	11.141	11.80	CF-1	1-7/16	4-7/16	1.44	8.50	4.0	0
48	TL48XH200-4040	**113823**	44.5	13.369	**None**	C-2	1-7/16	4-7/16	.72	8.50	4.0	.72
60	TL60XH200-4040	**113824**	47	16.711		C-3	1-7/16	4-7/16	.72	8.50	4.0	.72

XH300 - 7/8" Pitch (3" Wide Belt) F=3.63"

No. of Teeth	Description ◊	Part No.	Wt.	Pitch Dia. (P.D.)	Max. Flg. O.D.	Type †	Bore Range Min.	Bore Range Max.	Dimensions E	Dimensions H	Dimensions L	Dimensions M
18	TL18XH300-2012	**113121**	15	5.013	5.58	KF-1	1/2	2-1/8	1.38	...	1.25	1.0
20	TL20XH300-2012	**113122**	19	5.570	6.11	KF-1	1/2	2-1/8	1.38	...	1.25	1.0
22	TL22XH300-2517	**113854**	13.6	6.127	6.59	KF-1	1/2	2-11/16	.94	....	1.75	.94
24	TL24XH300-3020	**113857**	15.3	6.685	7.28	KF-1	7/8	3-1/4	.81	....	2.0	.81
26	TL26XH300-3020	**113860**	17.3	7.241	7.78	KF-1	7/8	3-1/4	.81	....	2.0	.81
28	TL28XH300-3535	**113863**	17.3	7.799	8.27	KF-1	1-3/16	3-15/16	.13	....	3.5	....
30	TL30XH300-3535	**113866**	22.5	8.356	9.31	KF-1	1-3/16	3-15/16	.13	....	3.5	....
32	TL32XH300-3535	**113869**	26.5	8.913	9.52	KF-1	1-3/16	3-15/16	.13	....	3.5	....
40	TL40XH300-4040	**113872**	43.5	11.141	11.80	CF-1	1-7/16	4-7/16	.38	7.50	4.0	....
48	TL48XH300-4040	**113873**	51.5	13.369	**None**	C-1	1-7/16	4-7/16	.19	8.50	4.0	.19
60	TL60XH300-4040	**113874**	55.5	16.711		C-3	1-7/16	4-7/16	.19	8.50	4.0	.19

† Dash 1 = Block, 2 = Web, 3 = Arm. (See page PT10-3, V-Drives Seciton) Letter "F" indicates pulley is flanged.

XXH Pullley Note: Discontinued Product. Recommend that drive be redesigned to HT100 or HT150. Refer to HT section of this catalog.

V-Drives
FHP Drives
Drive Component Accessories
DYNA-SYNC
HT200/HTD Synchronous Drives
HT500 Synchronous Drives
Roller Chain Sprockets

SPECIFICATIONS

DYNA-SYNC Pulleys - XL037

Minimum Plain Bore

TYPE DF

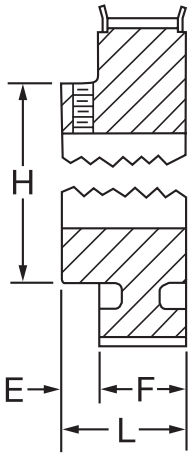

TYPE DF
Minimum Plain Bore

XL037 - 1/5" Pitch (.375" Wide Belt) - Minimun Plain Bore

F = 0.56"

No of Teeth	Description	Part Number	Approx. Weight	Pitch Dia (PD)	Flg O.D.	Type	Stock Bore *	Max Bore *	Dimension H	Dimension L	Dimension E
10	10XL037-MPB	**114300**	.08	0.637	.88	DF-1	3/16	3/16	.44	.81	.25
11	11XL037-MPB	**113401**	.09	0.700	.94	DF-1	3/16	3/16	.50	.81	.25
12	12XL037-MPB	**113402**	.10	0.764	1.00	DF-1	3/16	1/2	.50	.81	.25
14	14XL037-MPB	**113403**	.13	0.891	1.03	DF-1	1/4	1/4	.56	.81	.25
15	15XL037-MPB	**113404**	.14	0.955	1.19	DF-1	1/4	5/16	.63	.81	.25
16	16XL037-MPB	**113405**	.17	1.019	1.25	DF-1	1/4	3/8	.69	.81	.25
18	18XL037-MPB	**113406**	.20	1.146	1.38	DF-1	1/4	1/2	.81	.81	.25
20	20XL037-MPB	**113407**	.25	1.273	1.50	DF-1	1/4	9/16	.94	.88	.32
21	21XL037-MPB	**113408**	.26	1.337	1.56	DF-1	1/4	9/16	1.00	.88	.32
22	22XL037-MPB	**113409**	.30	1.401	1.63	DF-1	1/4	5/8	1.00	.88	.32
24	24XL037-MPB	**113410**	.35	1.528	1.75	DF-1	1/4	11/16	1.06	.91	.35
28	28XL037-MPB	**113411**	.46	1.783	2.00	DF-1	1/4	13/16	1.19	.91	.35
30	30XL037-MPB	**113412**	.55	1.910	2.13	DF-1	5/16	15/16	1.31	.91	.35
32	32XL037-MPB	• **113413**	.71	2.037	---	D-1	5/16	1-3/16	1.50	1.00	.44
36	36XL037-MPB	• **113414**	.85	2.292	---	D-1	5/16	1-3/16	1.50	1.00	.44
40	40XL037-MPB	• **113415**	.99	2.546	---	D-1	5/16	1-3/16	1.50	1.00	.44
42	42XL037-MPB	• **113416**	1.09	2.674	---	D-1	5/16	1-3/16	1.50	1.00	.44
44	44XL037-MPB	• **113417**	1.17	2.801	---	D-1	5/16	1-3/16	1.50	1.00	.44
48	48XL037-MPB	• **113418**	1.19	3.056	---	D-1	5/16	1-3/16	1.50	1.00	.44
60	60XL037-MPB	• **113419**	2.02	3.820	---	D-2	3/8	1-3/16	1.50	1.00	.44
72	72XL037-MPB	• **113420**	2.81	4.584	---	D-2	3/8	1-3/16	1.50	1.00	.44

NOTE: Above pulleys are supplied with two (2) set screws at 90 deg.
Max. bore is without keyway. (if keyway is used, reduce max bore by twice the keyway depth.)

* Standard keyways are listed on page PT1-83

• Aluminum

DYNA-SYNC Pulleys - Reborable

Minimum Plain Bore

L050 - 3/8” Pitch (.5” Wide Belt) - Minimun Plain Bore — F = 0.75”

No of Teeth	Description	Part Number	Approx. Weight	Pitch Dia (PD)	Flg O.D.	Type	Stock Bore	Max Bore	Dimension H	Dimension L	Dimension E
10	10L050-MPB	**113450**	.26	1.194	1.44	DF-1	3/8	1/2	.81	1.25	.50
12	12L050-MPB	**113451**	.38	1.432	1.66	DF-1	3/8	3/4	1.00	1.25	.50
13	13L050-MPB	**114441**	.50	1.552	1.78	DF-1	3/8	3/4	1.13	1.25	.50
14	14L050-MPB	**113452**	.55	1.671	1.91	DF-1	3/8	3/4	1.13	1.25	.50
15	15L050-MPB	**114442**	.66	2.030	2.03	DF-1	1/2	7/8	1.34	1.25	.50
16	16L050-MPB	**113453**	.69	1.790	2.13	DF-1	1/2	1	1.44	1.25	.50
17	17L050-MPB	**114301**	.84	1.910	2.25	DF-1	1/2	1	1.44	1.25	.50
18	18L050-MPB	**114302**	.87	2.149	2.38	DF-1	1/2	1	1.56	1.25	.50
19	19L050-MPB	**114303**	1.11	2.268	2.50	DF-1	1/2	1	1.69	1.25	.50
20	20L050-MPB	**114304**	1.20	2.378	2.63	DF-1	1/2	1	1.69	1.25	.50
21	21L050-MPB	**114305**	1.41	2.507	2.75	DF-1	1/2	1-1/4	2.00	1.25	.50
22	22L050-MPB	**114306**	1.50	2.626	2.88	DF-1	1/2	1-1/4	2.00	1.25	.50
24	24L050-MPB	**114307**	1.80	2.865	3.09	DF-1	1/2	1-3/8	2.25	1.25	.50
26	26L050-MPB	**114308**	2.07	3.104	3.33	DF-1	1/2	1-3/8	2.25	1.25	.50
28	28L050-MPB	**114309**	2.33	3.342	3.57	DF-1	1/2	1-3/8	2.25	1.25	.50
30	30L050-MPB	**114310**	2.58	3.581	3.80	DF-1	1/2	1-3/8	2.25	1.25	.50
32	32L050-MPB	**114311**	3.13	3.820	4.04	DF-1	1/2	1-5/8	2.63	1.25	.50
36	36L050-MPB	**114443**	4.39	4.297	4.52	DF-1	1/2	2-5/16	3.50	1.25	.50
40	40L050-MPB	**114444**	5.16	4.775	5.00	DF-1	1/2	2-3/8	3.63	1.25	.50

L075 - 3/8” Pitch (.75” Wide Belt) - Minimun Plain Bore — F = 1.00”

No of Teeth	Description	Part Number	Approx. Weight	Pitch Dia (PD)	Flg O.D.	Type	Stock Bore	Max Bore	Dimension H	Dimension L	Dimension E
12	12L075-MPB	**113500**	.46	1.432	1.66	DF-1	3/8	1/2	1.00	1.50	.50
13	13L075-MPB	**114445**	.62	1.552	1.78	DF-1	3/8	3/4	1.13	1.50	.50
14	14L075-MPB	**113501**	.69	1.671	1.91	DF-1	3/8	3/4	1.13	1.50	.50
15	15L075-MPB	**114446**	.81	1.790	2.03	DF-1	1/2	7/8	1.34	1.50	.50
16	16L075-MPB	**113502**	.84	1.910	2.13	DF-1	1/2	1	1.44	1.50	.50
17	17L075-MPB	**114312**	1.03	2.029	2.25	DF-1	1/2	1	1.44	1.50	.50
18	18L075-MPB	**114313**	1.17	2.149	2.38	DF-1	1/2	1	1.56	1.50	.50
19	19L075-MPB	**114314**	1.32	2.268	2.50	DF-1	1/2	1	1.69	1.50	.50
20	20L075-MPB	**114315**	1.44	2.387	2.63	DF-1	1/2	1-1/4	1.69	1.50	.50
21	21L075-MPB	**114316**	1.68	2.507	2.75	DF-1	5/8	1-1/4	2.00	1.50	.50
22	22L075-MPB	**114317**	1.79	2.626	2.88	DF-1	5/8	1-3/8	2.00	1.50	.50
24	24L075-MPB	**114318**	2.22	2.865	3.09	DF-1	5/8	1-3/8	2.25	1.50	.50
26	26L075-MPB	**114319**	2.48	3.104	3.33	DF-1	5/8	1-3/8	2.25	1.50	.50
28	28L075-MPB	**114320**	2.84	3.342	3.57	DF-1	5/8	1-3/8	2.25	1.50	.50
30	30L075-MPB	**114321**	3.24	3.581	3.80	DF-1	5/8	1-3/8	2.25	1.50	.50
32	32L075-MPB	**114322**	3.77	3.820	4.04	DF-1	5/8	1-5/8	2.63	1.50	.50
36	36L075-MPB	**114447**	5.33	4.297	4.52	DF-1	5/8	2-5/16	3.50	1.50	.50
40	40L075-MPB	**114448**	6.31	4.775	5.00	DF-1	5/8	2-3/8	3.63	1.50	.50

L100 - 3/8” Pitch (1” Wide Belt) - Minimun Plain Bore — F = 1.25”

No of Teeth	Description	Part Number	Approx. Weight	Pitch Dia (PD)	Flg O.D.	Type	Stock Bore	Max Bore	Dimension H	Dimension L	Dimension E
13	13L100- MPB	**114449**	.72	1.552	1.78	DF-1	3/8	3/4	1.13	1.75	.50
14	14L100- MPB	**113550**	.82	1.671	1.91	DF-1	3/8	3/4	1.13	1.75	.50
15	15L100- MPB	**114450**	.96	1.790	2.03	DF-1	1/2	7/8	1.34	1.75	.50
16	16L100- MPB	**113551**	.98	1.910	2.13	DF-1	1/2	1	1.44	1.75	.50
17	17L100- MPB	**114323**	1.23	2.029	2.25	DF-1	1/2	1	1.44	1.75	.50
18	18L100- MPB	**114324**	1.38	2.149	2.38	DF-1	1/2	1	1.56	1.75	.50
19	19L100- MPB	**114325**	1.56	2.268	2.50	DF-1	1/2	1	1.69	1.75	.50
20	20L100- MPB	**114326**	1.71	2.387	2.63	DF-1	1/2	1	1.69	1.75	.50
21	21L100- MPB	**114327**	1.97	2.507	2.75	DF-1	5/8	1-1/4	2.00	1.75	.50
22	22L100- MPB	**114328**	2.13	2.626	2.88	DF-1	5/8	1-1/4	2.00	1.75	.50
24	24L100- MPB	**114329**	2.60	2.865	3.09	DF-1	5/8	1-3/8	2.25	1.75	.50
26	26L100- MPB	**114330**	3.12	3.104	3.33	DF-1	5/8	1-5/8	2.44	1.75	.50
28	28L100- MPB	**114331**	3.65	3.342	3.57	DF-1	5/8	1-3/4	2.69	1.75	.50
30	30L100- MPB	**114332**	4.19	3.581	3.80	DF-1	5/8	1-7/8	2.81	1.75	.50
32	32L100- MPB	**114333**	4.86	3.820	4.04	DF-1	5/8	2	3.13	1.75	.50
36	36L100- MPB	**114451**	6.24	4.297	4.52	DF-1	5/8	2-5/16	3.50	1.75	.50
40	40L100- MPB	**114452**	7.52	4.775	5.00	DF-1	5/8	2-5/16	3.63	1.75	.50

NOTE: Available from stock in Min. Plain Bore (MPB) only.
Max. bore is without keyway. (if keyway is used, reduce max bore by twice the keyway depth.)

FEATURES/BENEFITS PAGE PT10-2	SPECIFICATIONS PAGE PT10-3	SELECTION PAGE PT10-14	ENGINEERING/TECHNICAL PAGE PT10-44

SPECIFICATIONS

DYNA-SYNC Pulleys - Reborable
Minimum Plain Bore

TYPE DF

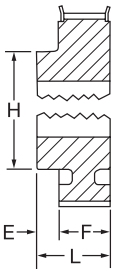

TYPE D

H100 - 1/2" Pitch (1" Wide Belt) - Minimun Plain Bore — **F = 1.25"**

No of Teeth	Description	Part Number	Approx Weight	Pitch Dia (PD)	Flg O.D.	Type	Stock Bore	Max Bore	Dimension H	Dimension L	Dimension E
14	14H100-MPB	**114334**	1.48	2.228	2.46	DF-1	5/8	7/8	1.63	1.88	.63
16	16H100-MPB	**114335**	2.12	2.546	2.78	DF-1	5/8	1-1/8	1.88	2.00	.75
17	17H100-MPB	**114453**	2.42	2.706	2.94	DF-1	5/8	1-1/4	2.00	2.00	.75
18	18H100-MPB	**114336**	2.86	2.865	3.10	DF-1	5/8	1-3/8	2.25	2.00	.75
19	19H100-MPB	**114337**	3.21	3.024	3.26	DF-1	5/8	1-1/2	2.38	2.00	.75
20	20H100-MPB	**114338**	3.68	3.183	3.42	DF-1	5/8	1-5/8	2.50	2.13	.88
21	21H100-MPB	**114339**	4.08	3.342	3.57	DF-1	3/4	1-11/16	2.63	2.13	.88
22	22H100-MPB	**114340**	4.67	3.501	3.74	DF-1	3/4	1-3/4	2.75	2.25	1.00
24	24H100-MPB	**114341**	5.60	3.820	4.05	DF-1	3/4	1-7/8	3.00	2.25	1.00
26	26H100-MPB	**114342**	7.16	4.138	4.37	DF-1	3/4	2-1/4	3.38	2.38	1.13
28	28H100-MPB	**114343**	8.15	4.456	4.69	DF-1	3/4	2-5/16	3.50	2.38	1.13
30	30H100-MPB	**114454**	9.15	4.775	5.01	DF-1	3/4	2-3/8	3.63	2.38	1.13

H150 - 1/2" Pitch (1.5" Wide Belt) - Minimum Plain Bore — **F = 1.75"**

No of Teeth	Description	Part Number	Approx Weight	Pitch Dia (PD)	Flg O.D.	Type	Stock Bore	Max Bore	Dimension H	Dimension L	Dimension E
14	14H150-MPB	**114344**	1.85	2.228	2.46	DF-1	3/4	7/8	1.63	2.38	.63
16	16H150-MPB	**114345**	2.63	2.546	2.78	DF-1	3/4	1-1/8	1.88	2.50	.75
17	17H150-MPB	**114455**	3.06	2.706	2.94	DF-1	3/4	1-1/4	2.00	2.50	.75
18	18H150-MPB	**114346**	3.55	2.865	3.10	DF-1	3/4	1-3/8	2.25	2.50	.75
19	19H150-MPB	**114347**	4.01	3.024	3.26	DF-1	3/4	1-1/2	2.38	2.50	.75
20	20H150-MPB	**114348**	4.62	3.183	3.42	DF-1	3/4	1-5/8	2.50	2.63	.88
21	21H150-MPB	**114349**	5.15	3.342	3.57	DF-1	3/4	1-11/16	2.63	2.63	.88
22	22H150-MPB	**114350**	5.89	3.501	3.74	DF-1	3/4	1-3/4	2.75	2.75	1.00
24	24H150-MPB	**114351**	7.09	3.820	4.05	DF-1	3/4	1-7/8	3.00	2.75	1.00
26	26H150-MPB	**114352**	8.62	4.138	4.37	DF-1	3/4	2-1/4	3.38	2.75	1.00
28	28H150-MPB	**114353**	10.09	4.456	4.69	DF-1	3/4	2-5/16	3.50	2.88	1.13
30	30H150-MPB	**114456**	11.52	4.775	5.01	DF-1	3/4	2-3/8	3.63	2.88	1.13

H200 - 1/2" Pitch (2" Wide Belt) - Minimun Plain Bore — **F = 2.28"**

No of Teeth	Description	Part Number	Approx Weight	Pitch Dia (PD)	Flg O.D.	Type	Stock Bore	Max Bore	Dimension H	Dimension L	Dimension E
14	14H200-MPB	**114354**	2.35	2.228	2.44	DF-1	3/4	7/8	1.63	2.91	.63
16	16H200-MPB	**114355**	3.29	2.546	2.88	DF-1	3/4	1-1/8	1.88	3.03	.75
17	17H200-MPB	**114457**	3.77	2.706	3.00	DF-1	3/4	1-1/4	2.00	3.03	.75
18	18H200-MPB	**114356**	3.90	2.865	3.13	DF-1	3/4	1-3/8	2.25	3.03	.75
19	19H200-MPB	**114357**	3.90	3.024	3.38	DF-1	3/4	1-1/2	2.38	3.03	.75
20	20H200- MPB	**114358**	5.34	3.183	3.38	DF-1	3/4	1-5/8	2.50	3.16	.88
21	21H200-MPB	**114359**	6.10	3.342	3.63	DF-1	1	1-11/16	2.63	3.16	.88
22	22H200-MPB	**114360**	6.30	3.501	3.81	DF-1	1	1-3/4	2.75	3.28	1.00
24	24H200-MPB	**114361**	8.35	3.820	4.06	DF-1	1	1-7/8	3.00	3.28	1.00
26	26H200-MPB	**114362**	10.44	4.138	4.38	DF-1	1	2-1/4	3.38	3.41	1.13
28	28H200-MPB	**114363**	12.01	4.456	4.69	DF-1	1	2-5/16	3.50	4.44	2.16
30	30H200-MPB	**114458**	13.80	4.775	5.00	DF-1	1	2-3/8	3.63	4.44	2.16

H300 - 1/2" Pitch (3" Wide Belt) - Minimun Plain Bore — **F = 3.31"**

No of Teeth	Description	Part Number	Approx Weight	Pitch Dia (PD)	Flg O.D.	Type	Stock Bore	Max Bore	Dimension H	Dimension L	Dimension E
16	16H300-MPB	**114364**	4.54	2.546	2.88	DF-1	3/4	1-1/8	1.88	4.06	.75
17	17H300-MPB	**114459**	5.23	2.706	3.00	DF-1	3/4	1-1/4	2.00	4.06	.75
18	18H300-MPB	**114365**	6.00	2.865	3.13	DF-1	3/4	1-3/8	2.25	4.06	.75
19	19H300-MPB	**114366**	6.80	3.024	3.38	DF-1	3/4	1-1/2	2.35	4.06	.75
20	20H300-MPB	**114367**	7.69	3.183	3.38	DF-1	3/4	1-5/8	2.50	4.19	.88
21	21H300-MPB	**114368**	8.59	3.342	3.63	DF-1	1	1-11/16	2.66	4.19	.88
22	22H300-MPB	**114369**	9.00	3.501	3.81	DF-1	1	1-3/4	2.75	4.31	1.00
24	24H300-MPB	**114370**	11.01	3.820	4.06	DF-1	1-1/8	1-7/8	3.00	4.31	1.00
26	26H300-MPB	**114371**	13.60	4.138	4.38	DF-1	1-1/8	2-1/4	3.38	4.44	1.13
28	28H300-MPB	**114372**	15.60	4.456	4.69	DF-1	1-1/8	2-5/16	3.50	4.44	1.13
30	30H300-MPB	**114460**	18.11	4.775	5.00	DF-1	1-1/8	2-3/8	3.63	4.44	1.13

NOTE: Available from stock in Min. Plain Bore (MPB) only.
Max. bore is without keyway. (if keyway is used, reduce max bore by twice the keyway depth.)

FEATURES/BENEFITS PAGE PT10-2	SPECIFICATIONS PAGE PT10-3	SELECTION PAGE PT10-14	ENGINEERING/TECHNICAL PAGE PT10-44

Dual DYNA-SYNC Belts

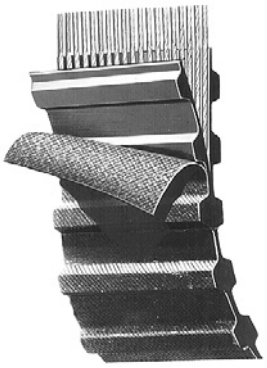

For Serpentine Drives

DXL Series Dual DYNA-SYNC Belts					DL Series Dual DYNA-SYNC Belts						
1/5" Pitch (XL)					3/8" Pitch (L)						
Belt Lgth.	XL025 (1/4" Wide)		XL037 (3/8" Wide)		Belt Lgth.	L050 (1/2" Wide)		L075 (3/4" Wide)		L100 (1" Wide)	
	Belt No.	Part No.	Belt No.	Part No.		Belt No.	Part No.	Belt No.	Part No.	Belt No.	Part No.
12.0	D120XL025	**110132**	D120XL037	**110133**	15.0	D150L050	**110187**	D150L075	**110158**	D150L100	**110189**
13.0	D130XL025	**110134**	D130XL037	**110135**	18.7	D187L050	**110190**	D187L075	**110191**	D187L100	**110192**
14.0	D140XL025	**110136**	D140XL037	**110137**	21.0	D210L050	**110193**	D210L075	**110194**	D210L100	**110195**
15.0	D150XL025	**110138**	D150XL037	**110139**	22.5	D225L050	**110196**	D225L075	**110197**	D255L100	**110198**
16.0	D160XL025	**110140**	D160XL037	**110141**	24.0	D240L050	**110199**	D240L075	**110200**	D240L100	**110201**
17.0	D170XL025	**110142**	D170XL037	**110143**	25.5	D255L050	**110202**	D255L075	**110203**	D255L100	**110204**
18.0	D180XL025	**110144**	D180XL037	**110145**	27.0	D270L050	**110205**	D270L075	**110206**	D270L100	**110207**
19.0	D190XL025	**110146**	D190XL037	**110147**	28.5	D285L050	**110208**	D285L075	**110209**	D285L100	**110210**
20.0	D200XL025	**110148**	D200XL037	**110149**	30.0	D300L050	**110211**	D300L075	**110212**	D300L100	**110213**
21.0	D210XL025	**110150**	D210XL037	**110151**	32.2	D322L050	**110214**	D322L075	**110215**	D322L100	**110216**
22.0	D220XL025	**110152**	D220XL037	**110153**	34.5	D345L050	**110217**	D345L075	**110218**	D345L100	**110219**
23.0	D230XL025	**110154**	D230XL037	**110155**	36.7	D367L050	**110220**	D367L075	**110221**	D367L100	**110222**
24.0	D240XL025	**110156**	D240XL037	**110157**	39.0	D390L050	**110223**	D390L075	**110224**	D390L100	**110225**
25.0	D250XL025	**110158**	D250XL037	**110159**	42.0	D420L050	**110226**	D420L075	**110227**	D420L100	**110228**
26.0	D260XL025	**110160**	D260XL037	**110161**	45.0	D450L050	**110229**	D450L075	**110230**	D450L100	**110231**
28.0	D280XL025	**110162**	D280XL037	**110163**	48.0	D480L050	**110232**	D460L075	**110233**	D480L100	**110234**
29.0	D290XL025	**110164**	D290XL037	**110165**	51.0	D510L050	**110235**	D510L075	**110236**	D510L100	**110237**
30.0	D300XL025	**110166**	D300XL037	**110167**	54.0	D540L050	**110238**	D540L075	**110239**	D540L100	**110240**
31.0	D310XL025	**110168**	D310XL037	**110169**	60.0	D600L050	**110241**	D600L075	**110242**	D600L100	**110243**
33.0	D330XL025	**110170**	D330XL037	**110171**	66.0	D660L050	**110244**	D660L075	**110245**	D660L100	**110246**
	Avg. Wt. .03Lb.		Avg. Wt. 0.5Lb.			Avg. Wt. .14Lb.		Avg. Wt. .21Lb.		Avg. Wt. .26Lb.	

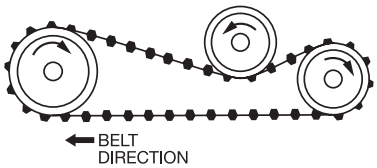

DH Series Dual DYNA-SYNC Belts

1/2" Pitch (H)										
Belt Lgth.	H075 (3/4" Wide)		H100 (1" Wide)		H150 (1-1/2" Wide)		H200(2" Wide)		H300 (3" Wide)	
	Belt No.	Part No.	Belt No.	Part No.	Belt No.	Part No.	Belt No.	Part No.	Belt No.	Part No.
24.0	D240H075	**110247**	D240H100	**110248**	D240H150	**110249**	D240H200	**110250**	D240H300	**110251**
27.0	D270H075	**110252**	D270H100	**110253**	D270H150	**110254**	D270H200	**110255**	D270H300	**110256**
30.0	D300H075	**110257**	D300H100	**110258**	D300H150	**110259**	D300H200	**110260**	D300H300	**110261**
33.0	D330H075	**110262**	D330H100	**110263**	D330H150	**110264**	D330H220	**110565**	D330H300	**110266**
36.0	D360H075	**110267**	D360H100	**110268**	D360H150	**110269**	D360H200	**110270**	D360H300	**110271**
39.0	D390H075	**110272**	D390H100	**110273**	D390H150	**110274**	D390H200	**110275**	D390H300	**110276**
42.0	D420H075	**110277**	D420H100	**110278**	D420H150	**110279**	D420H200	**110280**	D420H300	**110281**
45.0	D450H075	**110282**	D450H100	**110283**	D450H150	**110284**	D450H200	**110285**	D450H300	**110269**
48.0	D480H075	**110287**	D480H100	**110288**	D480H150	**110289**	D480H200	**110290**	D480H300	**110291**
51.0	D510H075	**110292**	D510H100	**110293**	D510H150	**110294**	D510H200	**110295**	D510H300	**110296**
54.0	D540H075	**110297**	D540H100	**110298**	D540H150	**110299**	D540H220	**110300**	D540H300	**110301**
57.0	D570H075	**110302**	D570H100	**110303**	D570H150	**110304**	D570H200	**110305**	D570H300	**110306**
60.0	D600H075	**110307**	D600H100	**110308**	D600H150	**110309**	D600H200	**110310**	D600H300	**110311**
63.0	D630H075	**110312**	D630H100	**110313**	D630H150	**110314**	D630H200	**110315**	D630H300	**110316**
66.0	D660H075	**110317**	D660H100	**110318**	D660H150	**110319**	D660H200	**110320**	D660H300	**110321**
70.0	D700H075	**110322**	D700H100	**110323**	D700H150	**110324**	D700H200	**110325**	D700H300	**110326**
75.0	D750H075	**110327**	D750H100	**110328**	D750H150	**110329**	D750H200	**110330**	D750H300	**110331**
80.0	D800H075	**110332**	D800H100	**110333**	D800H150	**110334**	D800H200	**110335**	D800H300	**110336**
85.0	D850H075	**110337**	D850H100	**110338**	D850H150	**110339**	D850H200	**110340**	D850H300	**110341**
90.0	D900H075	**110342**	D900H100	**110343**	D900H150	**110344**	D900H200	**110345**	D900H300	**110346**
100.0	D1000H075	**110347**	D1000H100	**110348**	D1000H150	**110349**	D1000H200	**110350**	D1000H300	**110351**
110.0	D1100H075	**110352**	D1100H100	**110353**	D1100H150	**110354**	D1100H200	**110355**	D1100H300	**110356**
125.0	D1250H075	**110357**	D1250H100	**110358**	D1250H150	**110359**	D1250H200	**110360**	D1250H300	**110361**
140.0	D1400H075	**110362**	D1400H100	**110363**	D1400H150	**110364**	D1400H200	**110365**	D1400H300	**110366**
170.0	D1700H075	**110367**	D1700H100	**110368**	D1700H150	**110369**	D1700H200	**110370**	D1700H300	**110371**
	Avg. Wt. .35Lb.		Avg. Wt. .47Lb.		Avg. Wt. .70Lb.		Avg. Wt. .94Lb.		Avg. Wt. 1.41Lb.	

FEATURES/BENEFITS PAGE PT10-2	SPECIFICATIONS PAGE PT10-3	SELECTION PAGE PT10-14	ENGINEERING/TECHNICAL PAGE PT10-44

SPECIFICATIONS

DYNA-SYNC - Belts

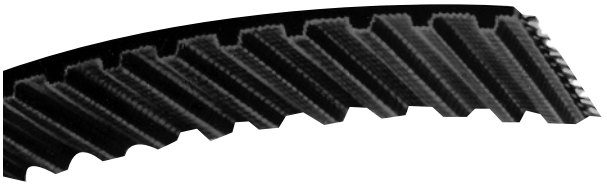

XL Series DYNA-SYNC Belts

1/5" Pitch (XL)						
Belt Length	XL025 (1/4" Wide) Belt No.	Part No.	Wt.	XL037 (3/8" Wide) Belt No.	Part No.	Wt.
6.0	60XL025	**465335**	...	60XL037	**464521**	...
7.0	70XL025	**464501**	...	70XL037	**464522**	...
8.0	80XL025	**464502**	...	80XL037	**464523**	...
9.0	90XL025	**464503**	...	90XL037	**464524**	.01
10.0	100XL025	**464504**	...	100XL037	**464525**	.01
11.0	110XL025	**464505**	...	110XL037	**464526**	.01
12.0	120XL025	**464506**	...	120XL037	**464527**	.01
13.0	130XL025	**464507**	.01	130XL037	**464528**	.01
14.0	140XL025	**464508**	.01	140XL037	**464529**	.01
15.0	150XL025	**464509**	.01	150XL037	**464530**	.01
16.0	160XL025	**464510**	.01	160XL037	**464531**	.01
17.0	170XL025	**464511**	.01	170XL037	**464532**	.01
18.0	180XL025	**464512**	.01	180XL037	**464533**	.02
19.0	190XL025	**464513**	.01	190XL037	**464534**	.02
20.0	200XL025	**464514**	.01	200XL037	**464535**	.02
21.0	210XL025	**464515**	.01	210XL037	**464536**	.02
22.0	220XL025	**464516**	.01	220XL037	**464537**	.02
23.0	230XL025	**464517**	.01	230XL037	**464538**	.02
24.0	240XL025	**464518**	.01	240XL037	**464539**	.02
25.0	250XL025	**464519**	.01	250XL037	**464540**	.02
26.0	260XL025	**464520**	.02	260XL037	**464541**	.02

L Series DYNA-SYNC Belts

3/8" Pitch (L)									
Belt Length	L050 (1/2" Wide)			L075 (3/4" Wide)			L100 (1" Wide)		
	Belt No.	Part No.	Wt.	Belt No.	Part No.	Wt.	Belt No.	Part No.	Wt.
12.4	124L050	**464542**	.03	124L075	**464562**	.05	124L100	**464582**	.06
15.0	150L050	**464543**	.04	150L075	**464563**	.06	150L100	**464583**	.08
18.7	187L050	**464544**	.05	187L075	**464564**	.07	187L100	**464534**	.10
21.0	210L050	**464545**	.05	210L075	**464565**	.08	210L100	**464585**	.09
22.5	225L050	**464546**	.06	225L075	**464566**	.09	225L100	**464586**	.11
24.0	240L050	**464547**	.06	240L075	**464567**	.09	240L100	**464587**	.11
25.5	255L050	**464548**	.06	255L075	**464568**	.10	255L100	**464588**	.13
27.0	270L050	**464549**	.07	270L075	**464569**	.10	270L100	**464589**	.14
28.5	285L050	**464550**	.07	285L075	**464570**	.11	285L100	**464590**	.14
30.0	300L050	**464551**	.08	300L075	**464571**	.11	300L100	**464591**	.15
32.2	322L050	**464552**	.08	322L075	**464572**	.12	322L100	**464592**	.16
34.5	345L050	**464553**	.09	345L075	**464573**	.13	345L100	**464593**	.17
36.7	367L050	**464554**	.09	367L075	**464574**	.14	367L100	**464594**	.19
39.0	390L050	**464555**	.10	390L075	**464575**	.15	390L100	**464595**	.20
42.0	420L050	**464556**	.11	420L075	**464576**	.16	420L100	**464596**	.21
45.0	450L050	**464557**	.11	450L075	**464577**	.17	450L100	**464597**	.23
48.0	480L050	**464558**	.12	480L075	**464578**	.18	480L100	**464598**	.24
51.0	510L050	**464559**	.13	510L075	**464579**	.19	510L100	**464599**	.26
54.0	540L050	**464560**	.14	540L075	**464580**	.21	540L100	**464600**	.27
60.0	600L050	**464561**	.15	600L075	**464581**	.23	600L100	**464601**	.30

DYNA-SYNC - Belts

H Series DYNA-SYNC Belts

Belt Length	1/2" Pitch (H)														
	H075 (3/4" Wide)			H100 (1" Wide)			H150 (1-1/2" Wide)			H200 (2" Wide)			H300 (3" Wide)		
	Belt No.	Part No.	Wt.	Belt No.	Part No.	Wt.	Belt No.	Part No.	Wt.	Belt No.	Part No.	Wt.	Belt No.	Part No.	Wt.
24.0	240H075	**464602**	.11	240H100	**464621**	.14	240H150	**464645**	.22	240H200	**464772**	.29	240H300	**464778**	.43
27.0	270H075	**464603**	.12	270H100	**464622**	.16	270H150	**464646**	.24	270H200	**464773**	.33	270H300	**464779**	.49
30.0	300H075	**464604**	.14	300H100	**464623**	.18	300H150	**464647**	.27	300H200	**464774**	.36	300H300	**464780**	.54
33.0	330H075	**464605**	.14	330H100	**464624**	.20	330H150	**464648**	.30	330H200	**464775**	.40	330H300	**464781**	.60
36.0	360H075	**464606**	.15	360H100	**464625**	.22	360H150	**464649**	.33	360H200	**464664**	.43	360H300	**464736**	.65
39.0	390H075	**464607**	.18	390H100	**464626**	.24	390H150	**464650**	.35	390H200	**464665**	.47	390H300	**464737**	.71
42.0	420H075	**464608**	.19	420H100	**464627**	.25	420H150	**464651**	.38	420H200	**464666**	.51	420H300	**464738**	.76
45.0	450H075	**464609**	.20	450H100	**464628**	.27	450H150	**464652**	.41	450H200	**464667**	.54	450H300	**464739**	.81
48.0	480H075	**464610**	.23	480H100	**464629**	.31	480H150	**464653**	.46	480H200	**464668**	.62	480H300	**464740**	.92
51.0	510H075	**464611**	.23	510H100	**464630**	.31	510H150	**464654**	.46	510H200	**464669**	.62	510H300	**464741**	.92
54.0	540H075	**464612**	.24	540H100	**464631**	.33	540H150	**464655**	.49	540H200	**464670**	.65	540H300	**464683**	.98
57.0	570H075	**464613**	.26	570H100	**464632**	.34	570H150	**464656**	.52	570H200	**464671**	.69	570H300	**464684**	1.03
60.0	600H075	**464614**	.27	600H100	**464633**	.36	600H150	**464657**	.54	600H200	**464672**	.72	600H300	**464685**	1.09
63.0	630H075	**464615**	.29	630H100	**464634**	.38	630H150	**464658**	.57	630H200	**464673**	.76	630H300	**464686**	1.14
66.0	660H075	**464616**	.30	660H100	**464635**	.40	660H150	**464659**	.60	660H200	**464674**	.80	660H300	**464687**	1.20
70.0	700H075	**464617**	.32	700H100	**464636**	.42	700H150	**464660**	.63	700H200	**464675**	.85	700H300	**464688**	1.27
75.0	750H075	**464618**	.34	750H100	**464637**	.45	750H150	**464661**	.68	750H200	**464676**	.91	750H300	**464689**	1.36
80.0	800H075	**464619**	.36	800H100	**464638**	.48	800H150	**464662**	.72	800H200	**464677**	.97	800H300	**464742**	1.45
85.0	850H075	**464620**	.38	850H100	**464639**	.51	850H150	**464663**	.77	850H200	**464678**	1.03	850H300	**464743**	1.54
90.0	900H075	**464759**	.41	900H100	**464640**	.54	900H150	**464766**	.82	900H200	**464679**	1.09	900H300	**464744**	1.63
100.0	1000H075	**464760**	.45	1000H100	**464641**	.60	1000H150	**464767**	.91	1000H200	**464680**	1.21	1000H300	**464745**	1.81
110.0	1100H075	**464761**	.50	1100H100	**464642**	.66	1100H150	**464768**	1.00	1100H200	**464681**	1.33	1100H300	**464746**	1.99
125.0	1250H075	**464762**	.57	1250H100	**464643**	.75	1250H150	**464769**	1.13	1250H200	**464682**	1.51	1250H300	**464747**	2.26
140.0	1400H075	**464763**	.63	1400H100	**464644**	.85	1400H150	**464770**	1.27	1400H200	**464776**	1.69	1400H300	**464748**	2.54
170.0	1700H075	**464764**	.77	1700H100	**464765**	1.03	1700H150	**464771**	1.54	1700H200	**464777**	2.05	1700H300	**464749**	3.08

XH Series DYNA-SYNC Belts

Belt Length	7/8" Pitch (XH)								
	XH200 (2" Wide)			XH300 (3" Wide)			XH400 (4" Wide)		
	Belt No.	Part No.	Wt.	Belt No.	Part No.	Wt.	Belt No.	Part No.	Wt.
50.7	507XH200	**464690**	1.77	507XH300	**464702**	2.66	507XH400	**464750**	3.54
56.0	560XH200	**464691**	1.95	560XH300	**464703**	2.93	560XH400	**464751**	3.91
63.0	630XH200	**464692**	2.20	630XH300	**464704**	3.30	630XH400	**464752**	4.40
70.0	700XH200	**464693**	2.33	700XH300	**464705**	3.49	700XH400	**464753**	4.65
77.0	770XH200	**464694**	2.69	770XH300	**464706**	3.49	770XH400	**464754**	4.65
84.0	840XH200	**464695**	2.79	840XH300	**464707**	4.19	840XH400	**464755**	5.58
98.0	980XH200	**464696**	3.42	980XH300	**464708**	5.13	980XH400	**464756**	6.84
112.0	1120XH200	**464697**	3.72	1120XH300	**464709**	5.58	1120XH400	**464757**	7.45
126.0	1260XH200	**464698**	4.19	1260XH300	**464710**	6.28	1260XH400	**464758**	8.38
140.0	1400XH200	**464699**	4.65	1400XH300	**464711**	6.98	1400XH400	**464782**	9.31
154.0	1540XH200	**464700**	5.12	1540XH300	**464712**	7.68	1540XH400	**464783**	10.2
175.0	1750XH200	**464701**	5.82	1750XH300	**464713**	8.73	1750XH400	**464784**	10.6

XXH Series DYNA-SYNC Belts

Belt Length	1-1/4" Pitch (XXH)											
	XXH200 (2" Wide)			XXH300 (3" Wide)			XXH400 (4" Wide)			XXH500 (5" Wide)		
	Belt No.	Part No.	Wt.	Belt No.	Part No.	Wt.	Belt No.	Part No.	Wt.	Belt No.	Part No.	Wt.
70.0	700XXH200	**465301**	3.23	700XXH300	**465302**	4.85	700XXH400	**465303**	6.47	700XXH500	**465304**	8.09
80.0	800XXH200	**465305**	3.70	800XXH300	**465306**	5.54	800XXH400	**465307**	7.39	800XXH500	**465308**	9.24
90.0	900XXH200	**465309**	4.38	900XXH300	**465310**	6.58	900XXH400	**465311**	8.77	900XXH500	**465312**	11.0
100.0	1000XXH200	**465313**	4.87	1000XXH300	**465314**	7.31	1000XXH400	**465315**	9.74	1000XXH500	**465316**	12.2
120.0	1200XXH200	**465337**	5.54	1200XXH300	**465317**	8.32	1200XXH400	**465318**	11.1	1200XXH500	**465319**	13.9
140.0	1400XXH200	**465323**	6.47	1400XXH300	**465320**	9.70	1400XXH400	**465321**	12.9	1400XXH500	**465322**	16.2
160.0	1600XXH200	**465324**	7.39	1600XXH300	**465325**	11.1	1600XXH400	**465326**	14.8	1600XXH500	**465327**	18.5
180.0	1800XXH200	**465338**	8.32	1800XXH300	**465329**	12.5	1800XXH400	**465330**	16.6	1800XXH500	**465331**	20.8

FEATURES/BENEFITS PAGE PT10-2	SPECIFICATIONS PAGE PT10-3	SELECTION PAGE PT10-14	ENGINEERING/TECHNICAL PAGE PT10-44

SELECTION

DYNA-SYNC Drives

USING STANDARD MOTOR SPEEDS

Step 1–Determine Service Factor from steps on page PT10-16.

Step 2–Compute Design HP. Multiply normal running HP required or nameplate rating by service factor obtained in Step 1.

Step 3–Choose Belt Section. Using Table 1, read up from design HP figure obtained in Step 2 and over from the RPM of faster shaft. This intersection indicates belt section.

Step 4–Select the Drive, **a).** Using the belt section from Step 3, refer to Selection Tables beginning on page PT10-18. **b).** Under appropriate standard full-load motor RPM, find the driven RPM nearest to the desired speed. Trace right to columns headed "Pulley Combination." If more than one is listed, the combination with the largest pulleys usually will offer the best belt life. (Note that one pulley must be flanged on all drives. If center distance exceeds 8 times P.D. of small pulley or shafts are vertical or inclined, both must be flanged.) **c).** On same line trace right to the figure nearest the desired center distance and at top of column note belt number. **d)**. Trace back on same line to appropriate column under heading "HP for a 1" Belt..." Divide the design HP obtained in Step 2 by the HP thus found in table. (Divide this value by Teeth in Mesh (T.I.M.) factor when applicable.) The result is the Belt Width Factor. Refer to table below right hand selection table to determine belt width required. If width shown is not stock go to next stock width listed. Add belt code, from table, to belt number found in Step 4c. (If wider stock belt is not shown in table, redesign drive to next larger pitch.) To check drive calculation: HP for a 1" Wide Belt x Belt Width factor x Teeth in Mesh factor = Actual HP rating of the drive. If actual rating is equal to or greater than Design HP, selection is O.K.

NOTE: Good practice dictates that shaft and bushing system (or alternate shaft mounting method) be verified for adequate rating.

DYNA-SYNC Drives

USING STANDARD MOTOR SPEEDS

EXAMPLE OF SELECTION

Select a drive for a 3 cylinder reciprocating compressor to run 8 hours a day at about 270 RPM and to be driven by a 5 HP, 1160 RPM Design B squirrel cage motor. Centers are about 25”.

Step 1–Service Factor from page PT10-16 is 2.2.

Step 2–Design HP = 5 x 2.2 = 11 HP.

Step 3–An “H” Cross Section is shown in Table 1 when reading to the right of 1160 RPM of faster shaft and up from 11 design HP.

Step 4–The H-Section drive tables begin on page PT10-30. On page PT10-34, the nearest driven speed for a 1160 RPM motor is 271 RPM. Two possible pulley combinations are listed. The 28H driver/120H driven is preferred. On the same line the nearest center distance to 25” is 25.45”. Note the 900 H belt at top of column. Tracing back on the same line, under 1160 RPM, the “HP for a 1” Belt” is 5.68. 11 design HP 5.68 = 1.937 Belt Width Factor. Belt Width Table indicates a 2” wide belt is required. Add code number 200 to belt and pulley number and order the following: (1) TL28H200 DYNA-SYNC Pulley, (1) 2012 Taper-Lock (1) TL120H200 pulley. (1) TAPER-LOCK 3020 bushing. (1) 900H200 DYNA-SYNC Belt. To facilitate delivery, order by part numbers listed in Pulley, Bushing and Belt sections of this catalog.

Table 1 - Synchronous Cross Section Selection Chart

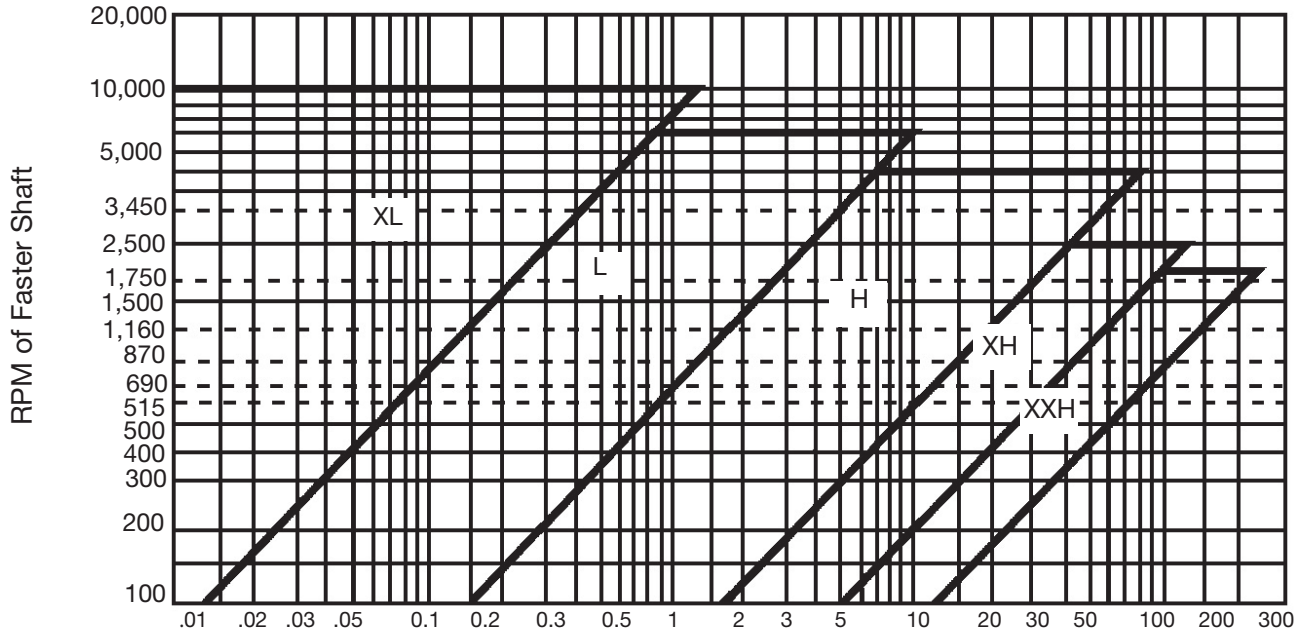

SELECTION

Service Factor

To determine the service factor for a DYNA-SYNC drive follow the three steps below.

Step 1. Determine the class of Driver from Table 2 below.

Step 2. Use Class of Driver and Type of Application in Table 4 at right to find the tentative service factor.

Step 3. Add the Additional Service Factor, when applicable, from Table 3 at bottom of page to the tentative service factor from Step 2 to determine the service factor for the application.

Table 2 - Class of Driver

Driver	Class I	Class II	Class III
A-C Electric Motors, Single Phase.	. . . . .	. . . . .	All
Squirrel Cage,			
NEMA Design A,			
3500 RPM	40 HP up	30 HP or less	. . . . .
1750 RPM	100 HP up	5 to 75 HP	3 HP or less
1160 RPM	15 HP up	10 HP or less	. . . . .
870 RPM	5 HP up	3 HP or less	. . . . .
NEMA Design B,			
3500 RPM	. . . . .	5 HP up	3 HP or less
1750 RPM	. . . . .	5 HP up	3 HP or less
1160 RPM	. . . . .	5 HP up	3 HP or less
870 RPM	. . . . .	2 HP up	1-1/2 HP or less
NEMA Design C,			
1750 RPM	. . . . .	15 HP up	10 HP or less
1160 RPM	. . . . .	7-1/2 HP up	5 HP or less
870 RPM	. . . . .	All	. . . . .
NEMA Design D .	. . . . .	. . . . .	All
NEMA Design F .	All	. . . . .	. . . . .
Wound Rotor, . . .	. . . . .		
1750 RPM	. . . . .	20 HP	15 HP or less
1160 RPM	. . . . .	15 HP	10 HP or less
870 RPM	. . . . .	7-1/2 HP	5 HP or less
Synchronous	. . . . .	Norm. Torque	High Torque
D-C Electric Motors	Shunt	Compound	Series
Engines-Int. Comb	8 Cyl. up	6 Cyl	4 Cyl. or less
Hydraulic Motors . .	. . . . .	. . . . .	All
Line Shafts	. . . . .	. . . . .	All

Table 3 - Additional Service Factors †

Condition	Additional Factor
24 hour continuous operation	0.2
Use of an idler	0.2
Intermittent or seasonal operation	◊
Speed up drive:	
1 to 1.24 ratio	0.0
1.25 to 1.74 ratio	0.1
1.75 to 2.49 ratio	0.2
2.50 to 3.49 ratio	0.3
Over 3.49 ratio	0.4

† Additional service factors other than listed here are required for unusual condition such as torque reversal, heavy shock, when current to motor is reversed to either stop the motor rapidly or to run it in opposite direction, or when a brake is to be used. For such applications consult factory.

◊ Subtract 0.2 from tentative service factor.

Table 4 - Service Factors*

Application	Class I	Class II	Class III
AGITATORS, MIXERS (Paddle or Propeller)			
Liquid	1.4	1.6	1.8
Semi-liquid	1.5	1.7	1.9
BAKERY MACHINERY DOUGH MIXERS	1.4	1.6	1.8
BRICK AND CLAY MACHINERY			
Augers, Mixers, Granulators	1.5	1.7	1.9
Pug Mills	1.8	2.0	2.2
CENTRIFUGES	1.8	1.9	. . .
COMPRESSORS			
Reciprocating	2.0	2.2	2.4
Centrifugal	1.8	1.7	1.8
CONVEYORS			
Light-Package Belt, oven	1.3	1.5	1.7
Belt, Ore, Coal, Sand	1.8	1.7	1.8
Apron, Bucket, Elevator, Pan	1.7	1.8	1.9
Flight, Screw	1.7	1.9	2.0
FANS, BLOWERS			
Centrifugal, Induced Draft Exhausters	1.8	1.8	2.0
Propeller, Mine fans, Positive Blowers	1.8	2.0	2.2
GENERATORS AND EXCITERS	1.6	1.8	2.0
HAMMER MILLS	1.7	1.9	2.1
LAUNDRY MACHINERY			
General	1.5	1.6	1.7
Extractors, Washers	1.6	1.8	2.0
LINE SHAFTS	1.5	1.7	1.9
MACHINE TOOLS			
Drill Presses, Lathes, Screw Machines	1.4	1.6	1.8
Boring Mills, Grinders	1.5	1.7	1.9
Milling Machines, Shapers	1.5	1.7	1.9
MILLS			
Ball, Rod, Pebble. etc.	. . .	2.2	2.5
PAPER MACHINERY			
Agitators, Calenders, Dryers	1.4	1.6	1.8
Beaters, Jordans, Nash Pumps, Pulpers	1.7	1.9	2.1
PRINTING MACHINERY			
Presses: Newspaper, Rotary, Embossing, Flat Bed, Magazine; Linotype Machines; Cutters; Folders	1.4	1.6	1.8
PUMPS			
Centrifugal, Gear, Rotary, Pipeline	1.5	1.7	1.9
Reciprocating	2.0	2.2	2.4
RUBBER PLANT MACHINERY	1.6	1.8	2.0
SAW MILL MACHINERY	1.6	1.8	2.0
SCREENS			
Vibrating (Shakers)	1.5	1.7	. . .
Drum, Conical	1.4	1.5	. . .
TEXTILE MACHINERY			
Looms, Spinning Frames, Twisters	1.6	1.8	2.0
Wrappers, Reels	1.5	1.7	. . .
WOODWORKING MACHINERY			
Lathes, Band Saws	1.3	1.4	. . .
Jointers, Circular Saws, Planers	1.4	1.6	. . .

DYNA-SYNC Drives

FOR SPEEDS OTHER THAN STANDARD MOTOR SPEEDS AND SPEED-UP DRIVES

For Speeds Other Than Standard Motor Speeds

Step 1 – Calculate Speed Ratio = $\frac{\text{Driver RPM}}{\text{Driven RPM}}$

Step 2 – Determine Service Factor from steps on page PT10-16.

Step 3 – Calculate Design HP. Multiply normal running HP required or nameplate rating by service factor obtained in Step 2.

Step 4 – Using Table 1 on page PT10-15 read up from design HP obtained in Step 3 and over from RPM of faster shaft. This intersection indicates belt section.

Step 5 – Select the Drive. a.) Using the belt section obtained in Step 4, refer to Selection Tables beginning on PT10-18. **b.)** Read down ratio column to the value nearest to one calculated in Step 1. Trace right to columns headed "Pulley Combinations." If more than one is listed, the combination with the largest pulleys usually will offer the best belt life. (Note that one pulley must be flanged on all drives. If center distance exceeds 8 times P.D. of small pulley or shafts are vertical or inclined, both must be flanged.) **c.)** On the same line trace right to figure nearest the desired center distance and at top of column note belt number. **d.)** Now go to the HP Table for the appropriate belt section. Reading to the right of the speed of the faster pulley and down from the pulley size, the HP figure for a 1" belt will appear. Divide the design HP from Step 3 by the HP thus found in table. (Divide this value by Teeth in Mesh factor, when applicable.) The result is the Belt Width Factor. Refer to table below the HP Table to determine belt width factor required. If width shown is not in stock go to next stock width listed. Add belt code, from table, to belt number found in Step 5c. (If wider stock belt is not shown in table, redesign drive to next larger pitch).

EXAMPLE OF SELECTION

A printing machine embossing roll runs at 426 RPM, powered from an 800 RPM line shaft. The roll required 7 HP. Machine runs 8-10 hrs. a day. Center distance is approx. 20".

Step 1 – Speed Ratio = = 1.88

Step 2 – Service Factor = 1.8

Step 3 – Design HP = 7 x 1.8 = 12.6

Step 4 – Belt Selection from Table 1 = H

Step 5 – The H Section Drive Tables begin on page PT10-30. The ratio of 1.88 obtained in Step 1 is found on page PT10-32. Two pulley combinations are listed. The 32H driver /60H driven is preferred. On the same line the nearest center distance to 20" is 19.88. Note the 630H belt at top of column. Refer to H section HP Tables on page PT10-42. Opposite 800 RPM of faster shaft and under 32H pulley, the HP 4.50 = 2.8. This is the belt width factor. Referring to the H belt width table a 3" wide belt is stock. Add the 300 Code Width to the pulley and belt numbers and order the following:

(1) TL32H300 DYNA-SYNC Pulley, (1) 2517 TAPER-LOCK bushing (Check to see if bushing will fit equipment shafts). (1) TL60H300 Pulley.

(1) 3020 bushing

(1) 630H300 DYNA-SYNC Belt.

To facilitate delivery, use part numbers listed in Pulley, Bushing and Belt sections of this catalog.

Example of a Speed-Up Drive

Select a drive for a continuous duty liquid agitator to run at about 2000 RPM and to be driven by a 10 HP, 1750 RPM squirrel cage motor Centers are about 10".

Step 1 – Speed ratio is 2000 ÷ 1750 = 1.14.

Step 2 – Service factor from page PT10-3 is 1.8

Step 3 – Design HP= 10 x 1.8= 18 HP.

Step 4 – An "H" Cross Section is shown in Table 1 when reading to the right of 2000 RPM and up from 18 design HP.

Step 5 – Speed ratio calculated in Step 1 appears in Selection Table on page PT10-30. Two possible pulley combinations are listed. The 28H driver/32H driven is preferred. In a Speed-Up Drive, the 28H becomes the driven, the 32H, the driver. On the same line the nearest center distance to 10" is 10.5. Note the 360H belt at top of column. Referring to HP table on page PT10-42, the rating for a 1" wide belt is shown as 9.60 for a 28H pulley at 2000 RPM. 18 design HP ÷ 9.601.875 Belt Width Factor Belt Width Table indicates a 2" wide belt is required. Add code number 200 to belt and pulley number and order the following: (1) TL32H200 DYNA-SYNC Pulley, (1) 2517 TAPER-LOCK Bushing. (Check to see if bushings will fit equipment shafts).
(1) TL28H200 Pulley, (1) 2012 bushing (with 2, max. bore).
(1) 360H200 DYNA-SYNC belt.

*** Selection program available online at ptwizard.com.**

V-Drives
FHP Drives
Drive Component Accessories
DYNA-SYNC
HT200/HTD Synchronous Drives
HT500 Synchronous Drives
Roller Chain Sprockets

SELECTION

XL Stock Drive Selections

Driven Speeds for Motor Speeds of			Speed Ratio	Pulley Combination				HP for a 1 Wide Belt for Motor Speeds of Δ			Nominal C.D. Using DYNA-SYNC Belts					
				Driver		Driven										
3500	1750	1160		No. of Teeth	Pitch Diam.	No. of Teeth	Pitch Diam.	3500	1750	1160	60XL	70XL	80XL	90XL	100XL	110XL
3500	1750	1160	1.00	30XL	1.910	30XL	1.910	2.11	1.07	.71	....	....	....	....	....	2.50
3500	1750	1160	1.00	28XL	1.783	28XL	1.783	1.98	1.00	.66	....	....	....	....	2.20	2.70
3500	1750	1160	1.00	24XL	1.528	24XL	1.528	1.71	.86	.56	....	....	....	2.10	2.60	3.10
3500	1750	1160	1.00	22XL	1.401	22XL	1.401	1.57	.79	.52	....	....	1.80	2.30	2.80	3.30
3500	1750	1160	1.00	21XL	1.337	21XL	1.337	1.49	.75	.50	....	....	1.90	2.40	2.90	3.40
3500	1750	1160	1.00	20XL	1.273	20XL	1.273	1.42	.72	.46	....	....	2.00	2.50	3.00	3.50
3500	1750	1160	1.00	18XL	1.146	18XL	1.146	1.28	.64	.42	....	1.70	2.20	2.70	3.20	3.70
3500	1750	1160	1.00	16XL	1.019	16XL	1.019	1.15	.58	.38	1.40	1.90	2.40	2.90	3.40	3.90
3500	1750	1160	1.00	15XL	.955	15XL	.955	1.07	.53	.36	1.50	2.00	2.50	3.00	3.50	4.00
3500	1750	1160	1.00	14XL	.891	14XL	.891	1.00	.50	.33	1.60	2.10	2.60	3.10	3.60	4.10
3500	1750	1160	1.00	12XL	.764	12XL	.764	.86	.43	.28	1.80	2.30	2.80	3.30	3.80	4.30
3500	1750	1160	1.00	11XL	.700	11XL	.700	.79 ◊	.39	.26	1.90†	2.40{	2.90†	3.40†	3.90†	4.40†
3341	1675	1107	1.05	21XL	1.337	22XL	1.401	1.49	.75	.50	....	....	1.85	2.35	2.85	3.35
3333	1667	1105	1.05	20XL	1.273	21XL	1.337	1.42	.72	.46	....	....	1.95	2.45	2.95	3.45
3281	1641	1088	1.07	30XL	1.910	32XL	2.037	2.11	1.07	.71	....	....	....	....	....	2.39
3281	1641	1088	1.07	15XL	.955	16XL	1.019	1.07	.53	.36	1.45	1.95	2.45	2.95	3.45	3.95
3267	1634	1083	1.07	28XL	1.783	30XL	1.910	1.98	1.00	.66	....	....	....	....	2.09	2.59
3267	1634	1083	1.07	14XL	.891	15XL	.955	1.00	.50	.33	1.55	2.05	2.55	3.05	3.55	4.05
3208	1604	1063	1.09	22XL	1.401	24XL	1.528	1.57	.79	.52	....	....	....	2.19	2.69	3.19
3208	1604	1063	1.09	11XL	.700	12XL	.764	.79 ◊	.39	.26	1.85†	2.35†	2.85†	3.35†	3.85†	4.35†
3182	1591	1055	1.10	20XL	1.273	22XL	1.401	1.42	.72	.46	....	....	1.89	2.39	2.89	3.39
3150	1575	1044	1.11	18XL	1.146	20XL	1.273	1.28	.64	.42	....	1.59	2.09	2.59	3.09	3.59
3111	1556	1031	1.13	16XL	1.019	18XL	1.146	1.15	.58	.38	....	1.79	2.29	2.79	3.29	3.79
3063	1532	1015	1.14	28XL	1.783	32XL	2.037	1.98	1.00	.66	....	....	....	....	....	2.49
3063	1532	1015	1.14	21XL	1.337	24XL	1.528	1.49	.75	.50	....	....	1.74	2.24	2.74	3.24
3063	1532	1015	1.14	14XL	.891	16XL	1.019	1.00	.50	.33	1.49	1.99	2.49	2.99	3.49	4.00
3000	1500	994	1.17	24XL	1.528	28XL	1.783	1.71	.86	.56	....	....	....	....	2.39	2.89
3000	1500	994	1.17	18XL	1.146	21XL	1.337	1.28	.64	.42	....	1.54	2.04	2.54	3.04	3.54
3000	1500	994	1.17	12XL	.764	14XL	.891	.86	.43	.28	1.69†	2.19†	2.69†	3.19†	3.69†	4.20†
2917	1458	967	1.20	30XL	1.910	36XL	2.292	2.11	1.07	.71	....	....	....	....	....	....
2917	1458	967	1.20	20XL	1.273	24XL	1.528	1.42	.72	.46	....	....	1.79	2.29	2.79	3.29
2917	1458	967	1.20	15XL	.955	18XL	1.146	1.07	.53	.36	1.34	1.84	2.34	2.84	3.34	3.84
2864	1432	949	1.22	18XL	1.146	22XL	1.401	1.28	.64	.42	....	....	1.99	2.49	2.99	3.49
2800	1400	928	1.25	24XL	1.528	30XL	1.910	1.71	.86	.56	....	....	....	....	2.29	2.79
2800	1400	928	1.25	16XL	1.019	20XL	1.273	1.15	.58	.38	....	1.69	2.19	2.69	3.19	3.69
2800	1400	928	1.25	12XL	.764	15XL	.955	.86	.43	.28	1.6†	2.14†	2.64†	3.14†	3.64†	4.14†
2750	1375	911	1.27	22XL	1.401	28XL	1.783	1.57	.79	.52	....	....	....	1.99	2.49	2.99
2750	1375	911	1.27	11XL	.700	14XL	.891	.79 ◊	.39	.26	1.7†	2.24†	2.74†	3.24†	3.74†	4.24†
2722	1361	902	1.29	28XL	1.783	36XL	2.292	1.98	1.00	.66	....	....	....	....	....	2.28
2722	1361	902	1.29	14XL	.891	18XL	1.146	1.00	.50	.33	1.39	1.89	2.39	2.89	3.39	3.89
2667	1333	884	1.31	16XL	1.019	21XL	1.337	1.15	.58	.38	....	1.64	2.14	2.64	3.14	3.64
2625	1313	870	1.33	30XL	1.910	40XL	2.546	2.11	1.07	.71	....	....	....	....	....	....
2625	1313	870	1.33	24XL	1.528	32XL	2.037	1.71	.86	.56	....	....	1.89	....	2.18	2.68
2625	1313	870	1.33	21XL	1.337	28XL	1.783	1.49	.75	.50	....	....	....	2.03	2.54	3.04
2625	1313	870	1.33	18XL	1.146	24XL	1.528	1.28	.64	.42	....	....	....	2.39	2.89	3.39
2625	1313	870	1.33	15XL	.955	20XL	1.273	1.07	.53	.36	....	1.74	2.24	2.74	3.24	3.74
2625	1313	870	1.33	12XL	.764	16XL	1.019	.86	.43	.28	1.59†	2.09†	2.59†	3.09†	3.59†	4.09†
2567	1283	851	1.36	22XL	1.401	30XL	1.910	1.57	.79	.52	....	....	....	....	2.38	2.88
2567	1283	851	1.36	11XL	.700	15XL	.955	.79 ◊	.38	.26	1.69†	2.19†	2.69†	3.19†	3.69†	4.19†
2545	1273	844	1.38	16XL	1.019	22XL	1.401	1.15	.58	.38	....	1.58	2.09	2.59	3.09	3.59
2500	1250	829	1.40	30XL	1.910	42XL	2.674	2.11	1.07	.71	....	1.68	....	....	....	....
2500	1250	829	1.40	20XL	1.273	28XL	1.783	1.42	.72	.46	....	....	....	2.08	2.58	3.09
2500	1250	829	1.40	15XL	.955	21XL	1.337	1.07	.53	.36	....	....	2.19	2.69	3.19	3.69
2450	1225	812	1.43	28XL	1.783	40XL	2.546	1.98	1.00	.66	....	....	....	....	....	....
2450	1225	812	1.43	21XL	1.337	30XL	1.910	1.49	.75	.50	....	....	....	1.92	2.43	2.93
2450	1225	812	1.43	14XL	.891	20XL	1.273	1.00	.50	.33	....	1.79	2.29	2.79	3.29	3.79
2406	1203	798	1.45	22XL	1.401	32XL	2.037	1.57	.79	.52	....	....	....	....	2.27	2.78
2406	1203	798	1.45	11XL	.700	16XL	1.019	.79 ◊	.39	.26	1.64†	2.14†	2.64†	3.14†	3.64†	4.14†

Δ HP ratings are for conventional speed-reduction drives.
For Speed-Up Drives refer to page PT10-17.

◊ Pulley Diameter is below recommended minimum. A reduction in belt life should be expected. Suggest alternate drive selection, whenever possible.

† See Teeth in Mesh table on opposite page

XL Stock Drive Selections

Nominal Center Distance Using DYNA-SYNC Belts														
120XL	130XL	140XL	150XL	160XL	170XL	180XL	190XL	200XL	210XL	220XL	230XL	240XL	250XL	260XL
3.00	3.50	4.00	4.50	5.00	5.50	6.00	6.50	7.00	7.50	8.00	8.50	9.00	9.50	10.00
3.20	3.70	4.20	4.70	5.20	5.70	6.20	6.70	7.20	7.70	6.20	8.70	9.20	9.70	10.20
3.60	4.10	4.60	5.10	5.60	6.10	6.60	7.10	7.60	8.10	6.60	9.10	9.60	10.10	10.60
3.80	4.30	4.80	5.30	5.80	6.30	6.80	7.30	7.80	8.30	8.80	9.30	9.80	10.30	10.80
3.90	4.40	4.90	5.40	5.90	6.40	6.90	7.40	7.90	8.40	8.90	9.40	9.90	10.40	10.90
4.00	4.50	5.00	5.50	6.00	6.50	7.00	7.50	8.00	8.50	9.00	9.50	10.00	10.50	11.00
4.20	4.70	5.20	5.70	6.20	6.70	7.20	7.70	8.20	8.70	9.20	9.70	10.20	10.70	11.20
4.40	4.90	5.40	5.90	6.40	6.90	7.40	7.90	8.40	8.90	9.40	9.90	10.40	10.90	11.40
4.50	5.00	5.50	6.00	6.50	7.00	7.50	8.00	8.50	9.00	9.50	10.00	10.50	11.00	11.50
4.60	5.10	5.60	6.10	6.60	7.10	7.60	8.10	8.60	9.10	9.60	10.10	10.60	11.10	11.60
4.80	5.30	5.80	6.30	6.80	7.30	7.80	8.30	8.60	9.30	9.80	10.30	10.80	11.30	11.80
4.90†	5.40†	5.90†	6.40†	6.90†	7.40†	7.90†	8.40†	8.90†	9.40†	9.90†	10.40†	10.90†	11.40†	11.90†
3.85	4.35	4.85	5.35	5.85	6.35	6.85	7.35	7.85	8.35	8.85	9.35	9.85	10.35	10.85
3.95	4.45	4.95	5.45	5.95	6.45	6.95	7.45	7.95	8.45	8.95	9.45	9.95	10.45	10.95
2.89	3.39	3.89	4.40	4.90	5.40	5.90	6.40	6.90	7.40	7.90	8.40	8.99	9.40	9.90
4.45	4.95	5.45	5.95	6.45	6.95	7.45	7.95	8.45	8.95	9.45	9.95	10.45	10.95	11.45
3.09	3.59	4.10	4.60	5.10	5.60	6.10	6.60	7.10	7.60	8.10	8.60	9.10	9.80	10.10
4.55	5.05	5.55	6.05	6.55	7.05	7.55	8.05	8.55	9.05	9.55	10.05	10.55	11.05	11.55
3.69	4.20	4.70	5.20	5.70	6.20	6.70	7.20	7.70	8.20	8.70	9.20	9.70	10.20	10.70
4.85†	5.35†	5.85†	6.35†	6.85†	7.35†	7.85†	8.35†	8.85†	9.35†	9.85†	10.35†	10.85†	11.35†	11.85†
3.89	4.40	4.90	5.40	5.90	6.40	6.90	7.40	7.90	8.40	8.90	9.40	9.90	10.40	10.90
4.10	4.60	5.10	5.60	6.10	6.60	7.10	7.60	8.10	8.60	9.10	9.60	10.10	10.60	11.10
4.30	4.80	5.30	5.80	6.30	6.80	7.30	7.80	8.30	8.80	9.30	9.80	10.30	10.80	11.30
2.99	3.49	3.99	4.49	4.99	5.49	5.99	6.49	6.99	7.49	7.99	8.49	8.99	9.49	9.99
3.74	4.24	4.74	5.24	5.74	6.24	6.74	7.24	7.74	8.24	8.74	9.25	9.75	10.25	10.75
4.50	5.00	5.50	6.00	6.50	7.00	7.50	8.00	8.50	9.00	9.50	10.00	10.50	11.00	11.50
3.39	3.89	4.39	4.89	5.39	5.89	6.39	6.89	7.39	7.89	8.39	8.89	9.39	9.89	10.39
4.04	4.54	5.04	5.54	6.04	6.54	7.04	7.54	8.04	8.54	9.05	9.55	10.05	10.55	11.05
4.70†	5.20†	5.70{†	6.20†	6.70†	7.20†	7.70†	8.20†	8.70†	9.20†	9.70†	10.20†	10.70†	11.20†	11.70†
2.69	3.19	3.69	4.19	4.69	5.19	5.69	6.19	6.69	7.19	7.69	8.19	8.69	9.19	9.69
3.79	4.29	4.79	5.29	5.79	6.29	6.79	7.29	7.79	8.29	8.79	9.29	9.79	10.29	10.79
4.34	4.84	5.34	5.84	6.34	6.84	7.34	7.84	8.34	8.84	9.35	9.85	10.35	10.85	11.35
3.99	4.49	4.99	5.49	5.99	6.49	6.99	7.49	7.99	8.49	8.99	9.49	9.99	10.49	10.99
3.29	3.79	4.29	4.79	5.29	5.79	6.29	6.79	7.29	7.79	8.29	8.79	9.29	9.79	10.29
4.19	4.69	5.19	5.69	6.19	6.69	7.19	7.69	8.19	8.69	9.19	9.69	10.19	10.89	11.19
4.64†	5.14†	5.64†	6.14†	6.64†	7.14†	7.64†	8.14†	8.64†	9.15†	9.65†	10.15†	10.65†	11.15†	11.65†
3.49	3.99	4.49	4.99	5.49	5.99	6.49	6.99	7.49	7.99	8.49	8.99	9.49	9.99	10.49
4.74†	5.24†	5.74†	6.24†	6.74†	7.24†	7.74†	8.24†	8.74†	9.25†	9.75†	10.25†	10.75†	11.25†	11.75†
2.78	3.29	3.79	4.29	4.79	5.29	5.79	6.29	6.79	7.29	7.79	8.29	8.79	9.29	9.79
4.39	4.89	5.39	5.89	6.39	6.89	7.39	7.89	8.39	8.89	9.39	9.89	10.39	10.69	11.39
4.14	4.64	5.14	5.64	6.14	6.64	7.14	7.64	8.14	8.64	9.14	9.64	10.14	10.64	11.14
2.48	2.98	3.48	3.98	4.48	4.99	5.49	5.99	6.49	6.99	7.49	7.99	8.49	8.99	9.49
3.19	3.69	4.19	4.69	5.19	5.69	6.19	6.69	7.19	7.69	8.19	8.69	9.19	9.69	10.19
3.54	4.04	4.54	5.04	5.54	6.04	6.54	7.04	7.54	8.04	8.54	9.04	9.54	10.04	10.54
3.89	4.39	4.89	5.39	5.89	6.39	6.89	7.39	7.89	8.39	8.89	9.39	9.89	10.39	10.89
4.24	4.74	5.24	5.74	6.24	6.74	7.24	8.24	8.24	8.74	9.24	9.74	10.24	10.74	11.24
4.59†	5.09†	5.59†	6.09†	6.59†	7.09†	7.59†	8.09†	8.59†	9.09†	9.59†	10.09†	10.59†	11.09†	11.59†
3.39	3.89	4.39	4.89	5.39	5.89	6.39	6.89	7.39	7.89	8.39	8.89	9.39	9.89	10.39
4.69†	5.19†	5.89†	6.19†	6.69†	7.19†	7.69†	8.19†	8.69†	9.19†	9.69†	10.19†	10.69†	11.19†	11.69†
4.09	4.59	5.09	5.59	6.09	6.59	7.09	7.59	8.09	8.59	9.09	9.59	10.09	10.59	11.09
....	2.87	3.37	3.88	4.38	4.88	5.38	5.88	6.38	6.88	7.39	7.89	8.39	8.69	9.39
3.59	4.09	4.59	5.09	5.59	6.09	6.59	7.09	7.59	8.09	8.59	9.09	9.59	10.09	10.59
4.19	4.69	5.19	5.69	6.19	6.69	7.19	7.69	8.19	8.69	9.19	9.69	10.19	10.69	11.19
2.57	3.07	3.58	4.08	4.58	5.08	5.58	6.08	6.58	7.09	7.59	8.09	8.59	9.09	9.59
3.43	3.84	4.44	4.94	5.44	5.94	6.44	6.94	7.44	7.94	8.44	8.94	9.44	9.94	10.44
4.29	4.79	5.29	5.79	6.29	6.79	7.29	7.79	8.29	8.79	9.29	9.79	10.29	10.79	11.29
3.28	3.78	4.28	4.78	5.29	5.79	6.29	6.79	7.29	7.79	8.29	8.79	9.29	9.79	10.29
4.64†	5.14†	5.64†	6.14†	6.64†	7.14†	7.64†	8.14†	8.64†	9.14†	9.64†	10.14†	10.64†	11.14†	11.64†

XL Belt Width Table

Belt Width Factor	.15	.28	.35	.42	.57	.71	.86	1.00	1.29	1.56
Belt Width	1/4	3/8	7/16	1/2	5/8	3/4	7/8	1	1-1/4	1-1/2
Belt Width Code	025	037	043	050	062	075	087	100	125	150

Teeth in Mesh Factor (T.I.M.)

Table Symbol	No. of Teeth In Mesh In Small Pulley	Factor
None	6 or More	1.00
†	5	.80

Shaded area indicates stock belt widths

FEATURES/BENEFITS PAGE PT10-2 | SPECIFICATIONS PAGE PT10-3 | SELECTION PAGE PT10-14 | ENGINEERING/TECHNICAL PAGE PT10-44

SELECTION

XL Stock Drive Selections

Driven Speeds for Motor Speeds of			Speed Ratio	Pulley Combination				HP for a 1 Wide Belt for Motor Speeds of Δ			Nominal C.D. Using DYNA-SYNC Belts					
				Driver		Driven										
3500	1750	1160		No. of Teeth	Pitch Diam.	No. of Teeth	Pitch Diam.	3500	1750	1160	60XL	70XL	80XL	90XL	100XL	110XL
2386	1193	791	1.47	15XL	1.901	44XL	2.801	2.11	1.07	.71	....	....	....	....	....	....
2386	1193	791	1.47	30XL	.955	22XL	1.401	1.07	.53	.36	....	1.63	2.13	2.64	3.14	3.64
2334	1167	773	1.50	28XL	1.783	42XL	2.674	1.98	1.00	.66	....	....	....	....	....	....
2334	1167	773	1.50	24XL	1.528	36XL	2.292	1.71	.86	.56	....	....	....	....	....	2.47
2334	1167	773	1.50	20XL	1.273	30XL	1.910	1.42	.72	.46	....	....	....	1.97	2.48	2.98
2334	1167	773	1.50	16XL	1.019	24XL	1.528	1.15	.58	.38	....	....	1.98	2.48	2.98	3.49
2334	1167	773	1.50	14XL	.891	21XL	1.337	1.00	.50	.33	....	1.73	2.23	2.74	3.24	3.74
2334	1167	773	1.50	12XL	.764	18XL	1.146	.86	.43	.28	1.48†	1.99†	2.49†	2.99†	3.49†	3.99†
2297	1148	761	1.52	21XL	1.337	32XL	2.037	1.49	.75	.50	....	....	....	....	2.32	2.82
2250	1125	746	1.56	18XL	1.146	28XL	1.783	1.28	.64	.42	....	....	....	2.17	2.68	3.18
2227	1114	738	1.57	28XL	1.783	44XL	2.801	1.98	1.00	.66	....	....	....	....	....	....
2227	1114	738	1.57	14XL	.891	22XL	1.401	1.00	.50	.33	....	1.68	2.18	2.68	3.19	3.69
2188	1094	725	1.60	30XL	1.910	48XL	3.056	2.11	1.07	.71	....	....	....	....	....	....
2188	1094	725	1.60	20XL	1.273	32XL	2.037	1.42	.72	.46	....	....	....	1.86	2.36	2.87
2188	1094	725	1.60	15XL	.955	24XL	1.528	1.07	.53	.36	....	1.52	2.02	2.53	3.03	3.53
2139	1059	709	1.64	22XL	1.401	36XL	2.292	1.57	.79	.52	....	....	....	....	....	2.56
2139	1069	709	1.64	11XL	.700	18XL	1.146	.79 ◊	.39	.26	1.53†	2.03†	2.54†	3.64†	3.54†	4.04†
2100	1050	696	1.67	24XL	1.528	40XL	2.546	1.71	.86	.56	....	....	....	....	....	....
2100	1050	696	1.67	18XL	1.146	30XL	1.910	1.28	.64	.42	....	....	....	2.06	2.57	3.07
2100	1050	696	1.67	12XL	.764	20XL	1.273	.86	.43	.28	1.37†	1.88†	2.38†	2.88†	3.39†	3.89†
2042	1021	677	1.71	28XL	1.783	48XL	3.056	1.98	1.00	.66	....	....	....	....	....	....
2042	1021	677	1.71	21XL	1.337	36XL	2.292	1.49	.75	.50	....	....	....	....	2.09	2.60
2042	1021	677	1.71	14XL	.891	24XL	1.528	1.00	.50	.33	....	1.56	2.07	2.58	3.08	3.58
2000	1000	663	1.75	24XL	1.528	42XL	2.674	1.71	.86	.56	....	....	....	....	....	....
2000	1000	683	1.75	16XL	1.019	28XL	1.783	1.15	.58	.38	....	....	1.75	2.26	2.77	3.27
2000	1000	663	1.75	12XL	.764	21XL	1.337	.86	.43	.28	1.31†	1.82†	2.33†	2.83†	3.33†	3.83†
1969	984	653	1.78	18XL	1.146	32XL	2.037	1.28	.64	.42	....	....	....	1.94	2.46	2.96
1944	972	644	1.80	20XL	1.273	36XL	2.292	1.42	.72	.46	....	....	....	....	2.13	2.65
1925	963	637	1.82	22XL	1.401	40XL	2.546	1.57	.79	.52	....	....	....	....	....	2.32
1925	963	637	1.82	11XL	.700	20XL	1.273	.79 ◊	.39	.26	1.42‡	1.92‡	2.43†	2.93†	3.43†	3.94†
1909	955	633	1.83	24XL	1.528	44XL	2.801	1.71	.86	.56	....	....	....	....	....	....
1909	955	633	1.83	12XL	.764	22XL	1.401	.86	.43	.28	....	1.77†	2.27†	2.78†	3.28†	3.78†
1875	937	621	1.87	15XL	.955	28XL	1.783	1.07	.53	.36	....	....	1.80	2.31	2.82	3.32
1867	933	619	1.88	16XL	1.019	30XL	1.910	1.15	.58	.38	....	....	....	2.15	2.66	3.16
1838	919	609	1.90	21XL	1.337	40XL	2.546	1.49	.75	.50	....	....	....	....	....	2.37
1833	917	607	1.91	22XL	1.401	42XL	2.674	1.57	.79	.52	....	....	....	....	....	....
1833	917	607	1.91	11XL	.700	21XL	1.337	.79 ◊	.39	.26	1.36‡	1.87‡	2.37‡	2.88†	3.38†	3.88†
1750	875	580	2.00	30XL	1.910	60XL	3.820	2.11	1.07	.71	....	....	....	....	....	....
1750	875	580	2.00	24XL	1.528	48XL	3.056	1.71	.86	.56	....	....	....	....	....	....
1750	875	580	2.00	22XL	1.401	44XL	2.801	1.57	.79	.52	....	....	....	....	....	....
1750	875	580	2.00	21XL	1.337	42XL	2.674	1.49	.75	.50	....	....	....	....	....	2.25
1750	875	580	2.00	20XL	1.273	40XL	2.546	1.42	.72	.46	....	....	....	....	....	2.41
1750	875	580	2.00	18XL	1.146	36XL	2.292	1.28	.64	.42	....	....	....	....	2.22	2.74
1750	875	580	2.00	16XL	1.019	32XL	2.037	1.15	.58	.38	....	....	....	2.03	2.54	3.05
1750	875	580	2.00	15XL	.955	30XL	1.910	1.07	.53	.36	....	....	1.68	2.19	2.70	3.21
1750	875	580	2.00	14XL	.891	28XL	1.783	1.00	.50	.33	....	....	1.84†	2.35	2.86	3.37
1750	875	580	2.00	12XL	.764	24XL	1.528	.86	.43	.28	....	1.65‡	2.16†	2.67†	3.17†	3.68†
1750	875	580	2.00	11XL	.700	22XL	1.401	.79 ◊	.39	.26	1.30‡	1.81‡	2.32‡	2.82†	3.33†	3.83†
1670	835	554	2.10	21XL	1.337	44XL	2.801	1.49	.75	.50	....	....	....	....	....	....
1666	833	552	2.10	20XL	1.273	42XL	2.674	1.42	.72	.46	....	....	....	....	....	2.29
1641	820	544	2.13	15XL	.955	32XL	2.037	1.07	.53	.36	....	....	....	2.07	2.59	3.10
1833	817	542	2.14	28XL	1.783	60XL	3.820	1.98	1.00	.66	....	....	....	....	....	....
1833	817	542	2.14	14XL	.891	30XL	1.910	1.08	.50	.33	....	....	1.72†	2.24†	2.75	3.26
1604	802	532	2.18	22XL	1.401	48XL	3.056	1.57	.79	.52	....	....	....	....	....	....
1604	802	532	2.18	11XL	.700	24XL	1.528	.79 ◊	.39	.26	....	1.69}	2.21‡	2.71‡	3.22†	3.72†
1591	795	527	2.20	20XL	1.273	44XL	2.801	1.42	.72	.46	....	....	....	....	....	....
1575	788	523	2.22	18XL	1.146	40XL	2.546	1.28	.64	.42	....	....	....	....	....	2.50
1556	778	516	2.25	16XL	1.019	36XL	2.292	1.15	.58	.38	....	....	....	....	2.31	2.82

Δ HP ratings are for conventional speed-reduction drives. For Speed-Up Drives refer to page PT10-17.

◊ Pulley Diameter is below recommended minimum. A reduction in belt life should be expected. Suggest alternate drive selection, whenever possible.

† ‡ See Teeth in Mesh table on opposite page.

♥ Flanges Required on both pulleys.

XL Stock Drive Selections

Nominal Center Distance Using DYNA-SYNC Belts

120XL	130XL	140XL	150XL	160XL	170XL	180XL	190XL	200XL	210XL	220XL	230XL	240XL	250XL	260XL
.....	2.76	3.27	3.77	4.27	4.77	5.28	5.78	6.28	6.78	7.28	7.78	8.28	8.78	9.28
4.14	4.64	5.14	5.64	6.14	8.64	7.14	7.64	8.14	8.64	9.14	9.64	10.14	10.64	11.14
2.46	2.96	3.47	3.97	4.47	4.98	5.48	5.98	6.48	8.98	7.48	7.98	8.48	8.98	9.49
2.97	3.47	3.98	4.48	4.98	5.48	5.98	6.48	6.99	7.49	7.99	8.49	8.99	9.49	9.99
3.48	3.98	4.48	4.99	5.49	5.99	8.49	6.99	7.49	7.99	8.49	8.99	9.49	9.99	10.49
3.99	4.49	4.99	5.49	5.99	8.49	6.99	7.49	7.99	8.49	8.99	9.49	9.99	10.49	10.99
4.24	4.74	5.24	5.74	6.24	8.74	7.24	7.74	8.24	8.74	9.24	9.74	10.24	10.74	11.24
4.49†	4.99†	5.49†	5.99†	6.49†	6.99†	7.49†	7.99†	8.49†	8.99†	9.49†	9.99†	10.49†	10.99†	11.49†
3.33	3.83	4.33	4.83	5.33	5.84	6.34	6.84	7.34	7.84	8.34	8.84	9.34	9.84	10.34
3.68	4.18	4.68	5.19	5.69	6.19	6.69	7.19	7.69	8.19	8.69	9.19	9.69	10.19	10.69
.....	2.85	3.36	3.86	4.37	4.87	5.37	5.87	6.38	6.88	7.38	7.88	8.38	8.88	9.38
4.19	4.69	5.19	5.69	6.19	6.69	7.19	7.69	8.19	8.69	9.19	9.69	10.19	10.69	11.19
.....	.....	3.04	3.55	4.06	4.56	5.06	5.57	6.07	6.57	7.07	7.57	8.08	8.58	9.08
3.37	3.88	4.38	4.88	5.38	5.88	6.38	6.88	7.39	7.89	8.39	8.89	9.39	9.89	10.39 ♥
4.04	4.54	5.04	5.54	6.04	6.54	7.04	7.54	8.04	8.54	9.04	9.54	10.04	10.54	11.04
3.06	3.57	4.07	4.57	5.08	5.58	6.08	6.58	7.08	7.58	8.08	8.58	9.08	9.59	10.09
4.54†	5.04†	5.54†	6.04†	6.54†	7.04†	7.54†	8.04†	8.54†	9.04†	9.54†	10.04†	10.54†	11.04†	11.54†
2.75	3.26	3.76	4.27	4.77	5.27	5.77	6.27	6.78	7.28	7.78	8.28	8.78	9.28	9.78
3.58	4.08	4.58	5.08	5.58	6.08	6.58	7.09	7.59	8.09	8.59	9.09	9.59	10.09	10.59
4.39†	4.89†	5.39†	5.89†	6.39†	6.89†	7.39†	7.89†	8.39†	8.89†	9.39†	9.89†	10.39†	10.89†	11.39†
.....	.....	3.13	3.64	4.15	4.65	5.16	5.66	6.16	6.67	7.17	7.67	8.17	8.67	9.17
3.11	3.61	4.12	4.62	5.12	5.83	6.13	6.63	7.13	7.63	8.13	8.83	9.13	9.63	10.13
4.08	4.58	5.09	5.59	6.09	6.59	7.09	7.59	8.09	8.59	9.09	9.59	10.09	10.59	11.09
2.63	3.14	3.65	4.16	4.66	5.16	5.67	6.17	6.67	7.17	7.67	8.18	8.68	9.18	9.68
3.78	4.28	4.78	5.28	5.78	6.28	6.78	7.29	7.79	8.29	8.79	9.29	9.79	10.29	10.79
4.34†	4.84†	5.34†	5.84†	6.34†	6.84†	7.34†	7.84†	8.34†	8.84†	9.34†	9.84†	10.34†	10.84†	11.34†
3.47	3.97	4.47	4.98	5.48	5.98	6.48	6.98	7.48	7.98	8.48	8.98	9.49♥	9.99 ♥	10.49 ♥
3.15	3.66	4.16	4.67	5.17	5.67	6.17	6.68	7.18	7.68	8.18	8.68	9.18	9.68	10.18
2.84	3.35	3.85	4.36	4.86	5.36	5.87	6.37	6.87	7.37	7.87	8.38	8.88	9.38	9.88
4.44†	4.94†	5.44†	5.94†	6.44†	6.94†	7.44†	7.94†	8.44†	8.94†	9.44†	9.94†	10.44†	10.94†	11.44†
2.51	3.03	3.54	4.05	4.55	5.06	5.56	6.06	6.56	7.07	7.57	8.07	8.57	9.07	9.57
4.28†	4.78†	5.29†	5.79†	6.29†	6.79†	7.29†	7.79†	8.29†	8.79†	9.29†	9.79†	10.29†	10.79†	11.29†
3.82	4.33	4.83	5.33	5.83	6.33	6.83	7.33	7.83	8.34	8.84	9.34	9.84	10.34	10.84
3.67	4.17	4.67	5.18	5.68	6.18	6.68	7.18	7.68	8.18	8.68	9.18	9.69	10.19	10.69
2.88	3.39	3.90	4.40	4.91	5.41	5.91	6.42	6.92	7.42	7.92	8.42	8.93	9.43	9.93
2.72	3.23	3.74	4.25	4.75	5.26	5.76	6.26	6.77	7.27	7.77	8.27	8.77	9.27	9.77
4.38†	4.89†	5.39†	5.89†	6.39†	6.89(	7.39†	7.89†	8.39†	8.89†	9.39†	9.89†	10.39†	10.89†	11.39†
.....	.....	.....	.....	3.36	3.88	4.39	4.90	5.41	5.92	6.42	6.93	7.43	7.94	8.44
.....	2.79	3.31	3.82	4.33	4.64	5.34	5.85	6.35	6.85	7.36	7.86	8.38	8.86	9.36
2.60	3.12	3.63	4.14	4.64	5.15	5.65	6.16	6.66	7.16	7.66	8.17	8.67	9.17	9.67
2.76	3.28	3.79	4.29	4.80	5.30	5.81	6.31	6.81	7.31	7.82	8.32	8.82	9.32	9.82
2.93	3.44	3.94	4.45	4.95	5.46	5.96	6.46	6.97	7.47	7.97	8.47	8.97	9.47	9.98
3.24	3.75	4.26	4.76	5.26	5.77	6.27	6.77	7.27	7.77	8.28	8.78	9.28 ♥	9.78 ♥	10.28♥
3.56	4.06	4.57	5.07	5.57	6.07	6.58	7.08	7.58	8.08	8.58 ♥	9.08 ♥	9.58 ♥	10.08 ♥	10.58 ♥
3.71	4.22	4.72	5.22	5.73	6.23	6.73	7.23	7.73	8.23	8.73	9.23	9.73	10.23	10.73
3.87	4.37	4.88	5.38	5.88	6.38	6.88	7.38	7.88	8.38	8.88	9.38	9.89	10.39	10.89
4.18†	4.68†	5.18†	5.68†	6.18†	6.68†	7.19†	7.69†	8.19†	8.69†	9.19†	9.69†	10.19†	10.69†	11.19†
4.33†	4.83†	5.33†	5.84†	6.34†	6.84†	7.34†	7.84†	8.34†	8.84†	9.34†	9.84†	10.34†	10.84†	11.34†
2.64	3.16	3.67	4.18	4.69	5.19	5.70	6.20	6.71	7.21	7.71	8.21	8.71	9.22	9.72
2.81	3.32	3.83	4.34	4.84	5.35	5.85	6.36	6.86	7.36	7.86	8.37	8.87	9.37	9.87
3.60	4.11	4.61	5.12	5.62	6.12	6.62	7.12	7.83	8.13 ♥	8.63 ♥	9.13 ♥	9.63 ♥	10.13 ♥	10.63 ♥
.....	.....	.....	.....	3.44	3.96	4.48	4.99	5.50	6.01	8.52	7.02	7.53	8.03	8.53
3.76	4.27	4.77	5.27	5.77	6.27	6.78	7.28	7.78	8.28	8.78	9.28	9.78	10.28	10.78
.....	2.88	3.39	3.91	4.42	4.93	5.43	5.94	6.44	6.95	7.45	7.95	8.45	8.96	9.46
4.23†	4.73†	5.23†	5.73†	6.23†	6.73†	7.23†	7.73†	8.24†	8.74†	9.24†	9.74†	10.24†	10.74†	11.24†
2.69	3.20	3.72	4.23	4.73	5.24	5.74	6.25	6.75	7.26	7.76	8.26	8.76	9.26	9.77
3.01	3.53	4.03	4.54	5.05	5.55	6.05	6.56	7.06	7.56	8.07	8.57	9.07	9.57 ♥	10.07 ♥
3.33	3.84	4.35	4.85	5.36	5.86	6.36	6.87	7.37	7.87	8.37 ♥	8.87 ♥	9.37 ♥	9.87 ♥	10.38 ♥

XL Belt Width Table

Belt Width Factor	.15	.28	.35	.42	.57	.71	.86	1.00	1.29	1.56
Belt Width	1/4	3/8	7/16	1/2	5/8	3/4	7/8	1	1-1/4	1-1/2
Belt Width Code	025	037	043	050	062	075	087	100	125	150

Teeth in Mesh Factor (T.I.M)

Table Symbol	No. of Teeth In Mesh In Small Pulley	Factor
None	6 or More	1.00
†	5	.80
‡	4	.60

Shaded area indicates stock belt widths

FEATURES/BENEFITS PAGE PT10-2	SPECIFICATIONS PAGE PT10-3	SELECTION PAGE PT10-14	ENGINEERING/TECHNICAL PAGE PT10-44

SELECTION

XL Stock Drive Selections

Driven Speeds for Motor Speeds of			Speed Ratio	Pulley Combination				HP for a 1 Wide Belt for Motor Speeds of Δ			Nominal C.D. Using DYNA-SYNC Belts					
				Driver		Driven										
3500	1750	1160		No. of Teeth	Pitch Diam.	No. of Teeth	Pitch Diam.	3500	1750	1160	60XL	70XL	80XL	90XL	100XL	110XL
1531	766	508	2.29	21XL	1.337	48XL	3.056	1.49	.75	.50	....	....	....	....	....	....
1531	766	508	2.29	14XL	.891	32XL	2.037	1.00	.50	.33	....	....	....	2.12†	2.63†	3.14†
1500	750	498	2.33	18XL	1.146	42XL	2.674	1.28	.64	.42	....	....	....	....	....	2.37†
1500	750	498	2.33	12XL	.764	28XL	1.783	.86	.43	.28	....	....	1.93‡	2.44†	2.95†	3.46†
1458	729	483	2.40	30XL	1.910	72XL	4.584	2.11	1.07	.71	....	....	....	....	....	....
1458	729	483	2.40	20XL	1.273	48XL	3.056	1.42	.72	.46	....	....	....	....	....	....
1458	729	483	2.40	15XL	.955	36XL	2.292	1.07	.53	.36	....	....	....	....	2.35†	2.87†
1432	716	475	2.44	18XL	1.146	44XL	2.801	1.28	.64	.42	....	....	....	....	....	2.24†
1400	700	464	2.50	24XL	1.528	60XL	3.820	1.71	.86	.56	....	....	....	....	....	....
1400	700	464	2.50	16XL	1.019	40XL	2.546	1.15	.58	.38	....	....	....	....	2.05†	2.58†
1400	700	464	2.50	12XL	.764	30XL	1.910	.86	.43	.28	....	....	1.80‡	2.32‡	....	3.35†
1375	688	456	2.55	11XL	.700	28XL	1.783	.79 ◊	.39	.26	....	....	1.97‡	2.49‡	2.84†	3.50†
1361	681	451	2.57	28XL	1.783	72XL	4.584	1.98	1.00	.66	....	....	....	1.86†	3.00‡	2.91†
1361	681	451	2.57	14XL	.891	36XL	2.292	1.00	.50	.33	....	....	....	....	2.39†	2.45†
1333	666	442	2.63	16XL	1.019	42XL	2.674	1.15	.58	.38	....	....	....	....	....	....
1312	656	435	2.67	18XL	1.146	48XL	3.056	1.28	.64	.42	....	....	....	....	....	....
1312	656	435	2.67	15XL	.955	40XL	2.546	1.07	.53	.36	....	....	....	....	2.09†	2.62†
1312	656	435	2.67	12XL	.764	32XL	2.037	.86	.43	.28	....	....	1.67‡	2. 20‡	2.72†	3.23†
1283	642	425	2.73	22XL	1.401	60XL	3.820	1.57	.79	.52	....	....	....	....	....	....
1283	642	425	2.73	11XL	.700	30XL	1.910	.79 ◊	.39	.26	....	....	1.85‡	2.37‡	2.88‡	3.39‡
1273	638	422	2.75	16XL	1.019	44XL	2.801	1.15	.58	.38	....	....	....	....	....	2.32†
1250	625	414	2.80	15XL	.955	42XL	2.674	1.07	.53	.36	....	....	....	....	....	2.50†
1225	613	406	2.86	21XL	1.337	60XL	3.820	1.49	.75	.50	....	....	....	....	....	....
1225	613	406	2.86	14XL	.891	40XL	2.546	1.00	.50	.33	....	....	....	....	2.13†	2.67†
1203	601	399	2.91	11XL	.700	32XL	2.037	.79 ◊	.39	.26	....	....	1.71§	2.25‡	2.78‡	3.28‡
1193	597	396	2.93	15XL	.955	44XL	2.801	1.07	.53	.36	....	....	....	....	....	2.36†
1167	583	387	3.00	24XL	1.528	72XL	4.584	1.71	.86	.56	....	....	....	....	....	....
1167	583	387	3.00	20XL	1.273	60XL	3.820	1.42	.72	.46	....	....	....	....	....	....
1167	583	387	3.00	16XL	1.019	48XL	3.056	1.15	.58	.38	....	....	....	....	....	....
1167	583	387	3.00	14XL	.891	42XL	2.874	1.00	.50	.33	....	....	....	....	1.99‡	2.54†
1167	583	387	3.00	12XL	.764	36XL	2.292	.86	.43	.28	....	....	....	1.94‡	2.48‡	3.00‡
1114	557	370	3.14	14XL	.891	44XL	2.801	1.00	.50	.33	....	....	....	....	....	2.40‡
1094	547	363	3.20	15XL	.955	48XL	3.056	1.07	.53	.36	....	....	....	....	....	....
1089	535	355	3.27	22XL	1.401	72XL	4.584	1.57	.79	.52	....	....	....	....	....	....
1089	535	355	3.27	11XL	.700	36XL	2.292	.79 ◊	.39	.26	....	....	....	1.98§	2.52‡	3.04‡
1050	525	348	3.33	18XL	1.146	60XL	3.820	1.28	.64	.42	....	....	....	....	....	....
1050	525	348	3.33	12XL	.764	40XL	2.546	.86	.43	.28	....	....	....	....	2.21‡	2.75‡
1021	510	338	3.43	21XL	1.337	72XL	4.584	1.49	.75	.50	....	....	....	....	....	....
1021	510	338	3.43	14XL	.891	48XL	3.056	1.00	.50	.33	....	....	....	....	....	....
1000	500	331	3.50	12XL	.764	42XL	2.874	.86	.43	.28	....	....	....	....	2.07‡	2.82‡
972	486	322	3.60	20XL	1.273	72XL	4.584	1.42	.72	.46	....	....	....	....	....	....
963	481	319	3.64	11XL	.700	40XL	2.546	.79 ◊	.39	.26	....	....	....	....	2.25§	2.79‡
955	477	316	3.67	12XL	.784	44XL	2.801	.86	.43	.28	....	....	....	....	....	2.48‡
933	467	309	3.75	16XL	1.019	60XL	3.820	1.15	.58	.38	....	....	....	....	....	....
917	458	304	3.82	11XL	.700	42XL	2.674	.79	.39	.26	....	....	....	....	2.11§	2.66‡
875	438	290	4.00	18XL	1.146	72XL	4.584	1.28	.64	.42	....	....	....	....	....	....
875	438	290	4.00	15XL	.955	60XL	3.820	1.07	.53	.36	....	....	....	....	....	....
875	438	290	4.00	12XL	.764	48XL	3.056	.86	.43	.28	....	....	....	....	....	2.19§
875	438	290	4.00	11XL	.700	44XL	2.801	.79 ◊	.39	.26	....	....	....	....	1.96§	2.52§
817	408	270	4.29	14XL	.891	60XL	3.820	1.00	.50	.33	....	....	....	....	....	....
802	401	266	4.36	11XL	.700	48XL	3.056	.79 ◊	.39	.26	....	....	....	....	....	2.23§
778	389	258	4.50	16XL	1.019	72XL	4.584	1.15	.58	.38	....	....	....	....	....	....
730	365	242	4.80	15XL	.955	72XL	4.584	1.07	.53	.36	....	....	....	....	....	....
700	350	232	5.00	12XL	.764	60XL	3.820	.86	.43	.28	....	....	....	....	....	....
681	340	226	5.14	14XL	.891	72XL	4.584	1.00	.50	.33	....	....	....	....	....	....
642	321	213	5.45	11XL	.700	60XL	3.820	.79 ◊	.39	.26	....	....	....	....	....	....
584	292	193	6.00	12XL	.764	72XL	4.584	.86	.43	.28	....	....	....	....	....	....
535	267	177	6.55	11XL	.700	72XL	4.584	.79 ◊	.39	.26	....	....	....	....	....	....

Δ HP ratings are for conventional speed-reduction drives. For Speed-Up Drives refer to page PT10-17.

◊ Pulley Diameter is below recommended minimum. A reduction in belt life should be expected. Suggest alternate drive selection, whenever possible.

† ‡ § See Teeth in Mesh table on opposite page.

♥ Flanges Required on both pulleys.

FEATURES/BENEFITS PAGE PT10-2	SPECIFICATIONS PAGE PT10-3	SELECTION PAGE PT10-14	ENGINEERING/TECHNICAL PAGE PT10-44

XL Stock Drive Selections

Nominal Center Distance Using DYNA-SYNC Belts

120XL	130XL	140XL	150XL	160XL	170XL	180XL	190XL	200XL	210XL	220XL	230XL	240XL	250XL	260XL
2.39	2.92	3.44	3.95	4.46	4.97	5.48	5.98	6.49	6.99	7.50	8.00	8.50	9.00	9.51
3.65	4.16	4.66	5.16	5.67	6.17	6.67	7.17♥	7.67♥	8.18♥	8.68♥	9.18♥	9.68♥	10.18♥	10.68♥
2.89	3.41	3.92	4.43	4.94	5.44	5.95	6.45	6.95	7.46	7.96	8.46	8.96	9.46 ♥	9. 97v
3.96†	4.47†	4.97†	5.47†	5.97†	6.48†	8.98†	7.48†	7.98†	8.48†	8.98†	9.48†	9.98†	10.48†	10.98†
....	....	....	....	....	....	3.65	4.18	4.70	5.22	5.74	6.25	6.76	7.27	7.78
2.43	2.96	3.48	4.00	4.51	5.02	5.52	6.03	6.53	7.00	7.54	8.05	8.55	9.05	9.55
3.38	3.89	4.39	4.90	5.40	5.91	8.41	6.91	7.42	7.92♥	8.42♥	8.92♥	9.42♥	9.92♥	10.42♥
2.77	3.29	3.81	4.32	4.82	5.33	5.84	6.34	6.85	7.35	7.85	8.35	8.86	9.36♥	9. 86♥
....	....	....	3.08	3.61	4.14	4.65	5.17	5.68	6.19	6.70	7.20	7.71	8.22	8.72
3.10	3.61	4.12	4.63	5.14	5.64	6.15	6.65	7.15	7.66	8.16♥	8.66♥	9.16♥	9.67♥	10.17♥
3.85†	4.36†	4.86†	5.36†	5.87†	6.37†	6.87†	7.37†	7.87†	8.38†	8.88†	9.38†	9.88†	10.38†	10.88†
4.01†	4.51†	5.02†	5.52†	6.02†	6.52†	7.02†	7.53†	8.03†	8.53†	9.03†	9.53†	10.03†	10.53†	11.03†
....	....	....	....	....	....	3.73	4.26	4.79	5.31	5.83	6.34	6.85	7.36	7.87
3.42	3.93	4.44	4.95	5.45	5.95	6.46	6.96	7.46♥	7.96♥	8.47♥	8.97♥	9.47♥	9.97♥	10.47♥
2.98	3.50	4.01	4.52	5.03	5.53	6.04	8.54	7.05	7.55	8.05	8.56©	9.06©	9.56♥	10.06♥
2.51	3.04	3.57	4.08	4.60	5.11	5.61	6.12	6.63	7.13	7.64	8.14	8.64	9.15	9.65♥
3.14	3.66	4.17	4.68	5.18	5.69	6.19	6.70	7.20♥	7.70♥	8.21♥	8.71♥	9.21♥	9.71♥	10.21♥
3.74†	4.25†	4.75†	5.26†	5.76†	6.26†♥	6.77†♥	7.27†♥	7.77†♥	8.27†♥	8.77†♥	9.27†♥	9.77†♥	10.28†♥	10.78†♥
....	....	....	3.16	3.70	4.22	4.74	5.26	5.77	6.28	6.79	7.30	7.80	8.31	8.81
3.90‡	4.40†	4.91†	5.41†	5.91†	6.42†	6.92†	7.42†	7.92†	8.42†	8.93†	9.43†	9.93†	10.43†	10.93†
2.86	3.38	3.89	4.41	4.91	5.42	5.93	6.43	6.94	7.44	7.95	8.45♥	8.95♥	9.45♥	9.96♥
3.02	3.54	4.05	4.56	5.07	5.58	8.06	6.59	7.09	7.60	8.10♥	8.60♥	9.11♥	9.61♥	10.11♥
....	....	....	3.20	3.74	4.26	4.78	5.30	5.81	6.32	8.83	7.34	7.85	8.35	8.86
3.19†	3.70†	4.21	4.72	5.23	5.74	6.24	6.74	7.25♥	7.75♥	8.25♥	8.76♥	9.26♥	9.78♥	10.26♥
3.79‡	4.29‡	4.80†	5.30†	5.81†♥	6.31†♥	6.81†♥	7.31†♥	7.82†♥	8.32†♥	8.82†♥	9.32†♥	9.82†♥	10.32†♥	10.82†♥
2.90	3.42	3.94	4.45	4.96	5.47	5.97	6.48	6.98	7.49	7.99♥	8.50♥	9.00♥	9.50♥	10.00♥
....	....	....	....	....	3.34	3.89	4.43	4.96	5.48	6.00	6.52	7.03	7.54	8.05
....	....	....	3.24	3.78	4.31	4.83	5.34	5.86	6.37	6.88	7.39	7.89	8.40	8.90
2.59‡	3.13	3.65	4.17	4.68	5.20	5.70	6.21	6.72	7.22	7.73	8.23♥	8.74♥	9.24♥	9.74♥
3.07‡	3.58†	4.10†	4.61	5.12	5.62	6.13	6.64	7.14♥	7.64♥	8.15♥	8.65♥	9.15♥	9.65♥	10.16♥
3.51‡	4.02†	4.53†	5.04†	5.54†	6.05†	6.55†♥	7.05†♥	7.56†♥	8.06†♥	8.56†♥	9.06†♥	9.57†♥	10.07†♥	10.57†♥
2.94†	3.46†	3.98‡	4.49	5.00	5.51	6.02	6.53	7.03	7.53♥	8.04♥	8.54♥	9.05♥	9.55♥	10.05♥
2.63†	3.17‡	3.70	4.21	4.73	5.24	5.75	6.26	6.76	7.27	7.77♥	8.26♥	8.78♥	9.29♥	9.79♥
....	....	....	....	....	3.42	3.97	4.51	5.04	5.57	6.09	6.60	7.12	7.83	8.14
3.56‡	4.07‡	4.58‡	5.08‡	5.59‡	6.09†♥	6.60†♥	7.10†♥	7.60†♥	8.11†♥	8.61†♥	9.11†♥	9.61†♥	10.11†♥	10.62†♥
	....	2.77	3.32	3.86	4.39	4.91	5.43	5.94	6.46	6.97	7.48	7.98	8.49	9.00
3.27‡	3.79†	4.30‡	4.81†	5.32†	5.83†	6.33†♥	6.84†♥	7.34†♥	7.84†♥	8.35†♥	8.85†♥	9.35†♥	9.86†♥	10.36†♥
....	....	....	....	....	3.46	4.01	4.55	5.08	5.61	6.13	6.65	7.16	7.67	8.18
2.67‡	3.21†	3.74†	4.26†	4.77†	5.28	5.79	6.30	6.81	7.32♥	7.82♥	8.33♥	8.83♥	9.33♥	9.84♥
3.15‡	3.67‡	4.19†	4.70†	5.21†	5.72†	6.22†♥	6.73†♥	7.23†♥	7.74†♥	8.24†♥	8.74†♥	9.25†♥	9.75†♥	10.25†♥
....	....	....	....	....	3.50	4.05	4.59	5.13	5.65	6.17	6.69	7.20	7.72	8.23
3.32‡	3.83‡	4.35‡	4.86‡	5.37‡	5.87†♥	6.38‡♥	6.88†♥	7.39†♥	7.89†♥	8.39†♥	8.90†♥	9.40†♥	9.90†♥	10.40†♥
3.02‡	3.55‡	4.07‡	4.58†	5.09†	5.60†	6.11‡	6.62†♥	7.12†♥	7.63†♥	8.13†♥	8.64†♥	9.14†♥	9.64†♥	10.14†♥
....	...	2.84‡	3.40‡	3.94	4.47	5.00	5.52	6.03	6.55	7.06	7.57	8.07	8.55♥	9.09♥
3.19‡	3.71‡	4.23‡	4.74‡	5.25‡	5.76‡	6.27♥	6.77‡♥	7.28‡♥	7.78†♥	8.29†♥	8.79†♥	9.29†♥	9.80†♥	10.30†♥
....	....	....	....	....	3.57	4.13	4.68	5.21	5.74	6.26	6.78	7.29	7.81	8.32
....	....	2.88‡	3.44‡	3.99‡	4.52†	5.04	5.56	6.08	8.59	7.10	7.61	8.12♥	8.63♥	9.13♥
2.75‡	3.29‡	3.82‡	4.34‡	4.86‡	5.37‡	5.88‡	6.39†♥	6.90‡♥	7.41†♥	7.91†♥	8.42†♥	8.92†♥	9.43†♥	9.93‡
3.06‡	3.59‡	4.11‡	4.63‡	5.14‡	5.65‡♥	6.16‡♥	6.66‡♥	7.17‡♥	7.67‡♥	8.18‡♥	8.68†♥	9.19†♥	9.69†♥	10.19†♥
	....	2.92‡	3.48‡	4.03‡	4.56†	5.08†	5.60†	6.12†	6.63†	7.15♥	7.66♥	8.16♥	8.67♥	9.18♥
2.79§	3.34‡	3.86‡	4.39†	4.90‡	5.42‡	5.93‡♥	6.44‡♥	6.95‡♥	7.45‡♥	7.96‡♥	8.46♥	8.97‡♥	9.47†♥	9.98†♥
....	....	....	....	3.06‡	3.65†	4.21†	4.76†	5.29	5.82	6.34	6.86	7.38	7.89	8.41♥
....	....	....	....	3.10‡	3.69‡	4.25†	4.80†	5.33†	5.86†	6.39	6.91	7.42	7.94♥	8.45♥
....	....	3.00	3.56‡	4.11‡	4.64‡	5.17‡	5.69‡	6.21‡♥	6.72‡♥	7.23‡♥	7.74†♥	5.25†♥	8.76‡♥	9.27†♥
....	....	....	....	3.14‡	3.73‡	4.29‡	4.84†	5.38‡	5.90†	8.43‡	8.95†	7.47†♥	7.98†♥	8.49†♥
....	....	3.04§	3.60§	4.15‡	4.68‡	5.21‡	5.73‡♥	6.25‡♥	6.77‡♥	7.28‡♥	7.79‡♥	8.30‡♥	8.81‡♥	9.31‡♥
....	....	....	....	3.21§	3.81§	4.37‡	4.92‡	5.46‡	5.99‡	6.51‡♥	7.03‡♥	7.55‡♥	8.07‡♥	8.58‡♥
....	....	....	....	3.25§	3.84§	4.41§	4.96§	5.50‡	6.03‡♥	6.56‡♥	7.08‡♥	7.60‡♥	8.11‡♥	8.63‡♥

XL Belt Width Table

Belt Width Factor	.15	.28	.35	.42	.57	.71	.86	1.00	1.29	1.56
Belt Width	1/4	3/8	7/16	1/2	5/8	3/4	7/8	1	1-1/4	1-1/2
Belt Width Code	025	037	043	050	062	075	087	100	125	150

Teeth in Mesh Factor (T.I.M)

Table Symbol	No. of Teeth In Mesh In Small Pulley	Factor
None	6 or More	1.00
†	5	.80

Table Symbol	No. of Teeth In Mesh In Small Pulley	Factor
‡	4	.60
§	3	.40

FEATURES/BENEFITS PAGE PT10-2	SPECIFICATIONS PAGE PT10-3	SELECTION PAGE PT10-14	ENGINEERING/TECHNICAL PAGE PT10-44

SELECTION

L Stock Drive Selections

Driven Speeds for Motor Speeds of			Speed Ratio	Pulley Combination				HP for a 1 Wide Belt for Motor Speeds of Δ			Nominal C.D. Using DYNA-SYNC Belts					
				Driver		Driven										
3500	1750	1160		No. of Teeth	Pitch Diam.	No. of Teeth	Pitch Diam.	3500	1750	1160	124L	150L	187L	210L	225L	240L
3500	1750	1160	1.00	48L	5.730	48L	5.730	6.27	4.06	2.81	....	....	....	....	....	....
3500	1750	1160	1.00	40L	4.775	40L	4.775	5.87	3.47	2.36	....	....	....	....	....	....
3500	1750	1160	1.00	32L	3.820	32L	3.820	5.10	2.83	1.91	....	....	....	4.51	5.26	6.01
3500	1750	1160	1.00	30L	3.581	30L	3.581	4.86	2.66	1.79	....	....	....	4.88	5.63	6.38
3500	1750	1160	1.00	28L	3.342	28L	3.342	4.71	2.49	1.67	....	....	4.13	5.26	6.01	6.76
3500	1750	1160	1.00	26L	3.104	26L	3.104	4.35	2.32	1.56	....	....	4.51	5.83	6.38	7.13
3500	1750	1160	1.00	24L	2.865	24L	2.865	4.06	2.15	1.44	....	....	4.88	6.01	6.76	7.51
3500	1750	1160	1.00	22L	2.626	22L	2.626	3.77	1.98	1.32	....	3.38	5.26	6.39	7.13	7.89
3500	1750	1160	1.00	20L	2.387	20L	2.387	3.46	1.80	1.20	....	3.76	5.63	6.76	7.51	8.26
3500	1750	1160	1.00	18L	2.149	18L	2.149	3.15	1.62	1.08	2.82	4.13	6.01	7.14	7.89	8.64
3500	1750	1160	1.00	16L	1.910	16L	1.910	2.83	1.45	.97	3.20	4.51	6.39	7.51	8.26	9.01
3500	1750	1160	1.00	14L	1.671	14L	1.671	2.49◊	1.27	.85	3.57	4.89	6.76	7.89	8.64	9.39
....	1750	1160	1.00	12L	1.432	12L	1.432	....	1.09◊	.72	3.95	5.26	7.14	8.26	9.01	9.76
....	1750	1160	1.00	10L	1.194	10L	1.194	....	.91◊	.60◊	4.32†	5.64†	7.51◊	8.64†	9.39†	10.14†
3281	1641	1087	1.07	30L	3.581	32L	3.820	4.86	2.66	1.79	....	....	....	4.69	5.44	6.19
3267	1633	1083	1.07	28L	3.342	30L	3.581	4.61	2.49	1.67	....	....	3.94	5.07	5.82	6.57
3250	1625	1077	1.08	26L	3.104	28L	3.342	4.35	2.32	1.56	....	....	4.32	5.44	6.19	6.95
3231	1615	1071	1.08	24L	2.865	26L	3.104	4.06	2.15	1.44	....	....	4.69	5.82	6.57	7.32
3208	1604	1063	1.09	22L	2.626	24L	2.865	3.77	1.98	1.32	....	....	5.07	6.20	6.95	7.70
3182	1591	1055	1.10	20L	2.387	22L	2.626	3.46	1.80	1.20	....	3.57	5.45	6.57	7.32	8.07
3150	1575	1044	1.11	18L	2.149	20L	2.387	3.15	1.62	1.08	....	3.94	5.82	6.95	7.70	8.45
3111	1556	1031	1.13	16L	1.910	18L	2.149	2.83	1.45	.97	....	4.32	6.20	7.32	8.07	8.82
3063	1531	1015	1.14	28L	3.342	32L	3.820	4.61	2.49	1.67	....	....	....	4.88	5.63	6.38
3036	1531	1015	1.14	14L	1.671	16L	1.910	2.49◊	1.27	.85	3.38	4.70	6.57	7.70	8.45	9.20
3033	1517	1005	1.15	26L	3.104	30L	3.581	4.35	2.32	1.56	....	....	4.12	5.25	6.00	6.75
3000	1500	994	1.17	24L	2.865	28L	3.342	4.06	2.15	1.44	....	....	4.50	5.63	6.38	7.13
....	1500	994	1.17	12L	1.432	14L	1.671	....	1.09◊	.72	3.76†	5.07†	6.95†	8.07†	8.83†	9.57◊
2962	1481	982	1.18	22L	2.626	26L	3.104	3.77	1.62	1.32	....	....	4.88	6.00	6.76	7.51
2917	1458	967	1.20	40L	4.775	48L	5.730	5.87	3.47	2.36	....	....	....	....	....	....
2917	1458	967	1.20	20L	2.387	24L	2.865	3.46	1.80	1.20	....	3.37	5.25	6.38	7.13	7.88
....	1458	967	1.20	10L	1.194	12L	1.432	....	.91◊	.60◊	4.13‡	5.45‡	7.32‡	8.45‡	9.20‡	9.95‡
2864	1432	949	1.22	18L	2.149	22L	2.626	3.15	1.62	1.08	....	3.75	5.63	6.76	7.51	8.26
2844	1422	943	1.23	26L	3.104	32L	3.820	4.35	2.32	1.56	....	....	....	5.06	5.81	6.56
2800	1400	928	1.25	48L	5.730	60L	7.162	6.27	4.06	2.81	....	....	....	....	....	....
2800	1400	928	1.25	32L	3.820	40L	4.775	5.10	2.83	1.91	....	....	....	....	....	5.29
2800	1400	928	1.25	24L	2.865	30L	3.581	4.06	2.15	1.44	....	....	4.31	5.43	6.19	6.94
2800	1400	928	1.25	16L	1.910	20L	2.387	2.83	1.45	.97	2.81	4.13	6.01	7.13	7.88	8.63
2750	1375	911	1.27	22L	2.626	28L	3.342	3.77	1.98	1.32	....	....	....	5.81	6.56	7.31
2722	1361	902	1.29	14L	1.671	18L	2.149	2.49◊	1.27	.85	3.19	4.50	6.38	7.51	8.26	9.01
2692	1346	892	1.30	20L	2.387	26L	3.104	3.46	1.80	1.20	....	....	5.06	6.19	6.94	7.69
2625	1313	870	1.33	30L	3.581	40L	4.775	4.86	2.66	1.79	....	....	....	....	4.66	5.41
2625	1313	870	1.33	24L	2.865	32L	3.820	4.06	2.15	1.44	....	....	4.10	5.24	5.99	6.74
2625	1313	870	1.33	18L	2.149	24L	2.865	3.15	1.62	1.08	3.56†	3.55	5.44	6.56	7.31	8.06
....	1313	870	1.33	12L	1.432	16L	1.910	....	1.09◊	.72	....	4.88†	6.76†	7.88†	8.63†	9.38†
2567	1283	851	1.36	22L	2.626	30L	3.581	3.77	1.98	1.32	....	....	4.48	5.61	6.37	7.12
2545	1273	844	1.38	16L	1.910	22L	2.626	2.83	1.45	.97	2.61	3.93	5.81	6.94	7.69	8.44
2500	1250	829	1.40	20L	2.387	28L	3.342	3.46	1.80	1.20	....	....	4.86	5.99	6.74	7.49
....	1250	829	1.40	10L	1.194	14L	1.671	....	.91◊	.60◊	3.94‡	5.26‡	7.13‡	8.26‡	9.01‡	9.76‡
2450	1225	812	1.43	28L	3.342	40L	4.775	4.61	2.49	1.67	....	....	....	....	4.83	5.59
2450	1225	812	1.43	14L	1.671	20L	2.387	2.49◊	1.27	.85	2.99	4.31	6.19	7.32	8.07	8.82

Δ HP ratings are for conventional speed-reduction drives.
For Speed-Up Drives refer to page PT10-17.

◊ Pulley Diameter is below recommended minimum. A reduction in belt life should be expected. Suggest alternate drive selection, whenever possible.

† ‡ § See Teeth in Mesh table on opposite page.

L Stock Drive Selections

Nominal Center Distance Using DYNA-SYNC Belts

255L	270L	285L	300L	322L	345L	367L	390L	420L	450L	480L	510L	540L	600L
....	....	....	....	7.13	8.26	9.38	10.51	12.01	13.51	15.01	16.51	18.01	21.01
5.26	6.01	6.76	7.51	8.63	9.76	10.88	12.01	13.51	15.01	16.51	18.01	19.51	22.51
6.76	7.51	8.26	9.01	10.14	11.26	12.39	13.51	15.01	16.51	18.01	19.51	21.01	24.01
7.13	7.88	8.63	9.39	10.51	11.64	12.76	13.89	15.39	16.89	18.39	19.89	21.39	24.39
7.51	5.26	9.01	9.76	10.89	12.01	13.14	14.26	15.76	17.26	18.76	20.26	21.76	24.76
7.88	8.63	9.39	10.14	11.26	12.39	13.51	14.64	16.14	17.64	19.14	20.64	22.14	25.14
8.26	9.01	9.76	10.51	11.64	12.76	13.89	15.01	16.51	18.01	19.51	21.01	22.51	25.50
8.64	9.39	10.14	10.89	12.01	13.14	14.26	15.39	16.89	18.39	19.89	21.39	22.89	25.89
9.01	9.76	10.51	11.26	12.39	13.51	14.64	15.76	17.26	18.76	20.26	21.76	23.26	26.26
9.39	10.14	10.89	11.64	12.76	13.89	15.01	16.14	17.64	19.14	20.64	22.14	23.64	26.64
9.76	10.51	11.26	12.01	13.14	14.26	15.39	16.51	18.01	19.51	21.01	22.51	24.01	27.01
10.14	10.89	11.64	12.39	13.51	14.64	15.76	16.89	19.89	19.89	21.39	22.89	24.39	27.39
10.51	11.26	12.01	12.76	13.89	15.01	16.14	17.26	18.40	20.26	21.76	23.26	24.76	27.76
10.89†	11.64†	12.39†	13.14†	14.26†	15.39†	16.51†	17.64†	19.14†	20.64†	22.14†	23.64†	25.14†	28.14†
6.94	7.69	8.45	9.20	10.32	11.47	12.57	13.70	15.20	16.70	18.20	19.70	21.20	24.20
7.32	8.07	8.82	9.57	10.70	11.82	12.95	14.07	15.57	17.07	18.57	20.07	21.57	24.57
7.70	8.45	9.20	9.95	11.07	12.20	13.32	14.45	15.95	17.45	18.95	20.45	21.95	24.95
8.07	8.82	9.57	10.32	11.45	12.57	13.70	14.82	16.33	17.82	19.32	20.82	22.33	25.33
8.45	9.20	9.95	10.70	11.82	12.95	14.07	15.20	16.70	18.20	19.70	21.20	22.70	25.70
8.82	9.57	10.32	11.07	12.20	13.33	14.45	15.58	17.07	18.57	20.08	21.58	23.08	26.08
9.20	9.95	10.70	11.45	12.57	13.70	14.82	15.95	17.45	18.95	20.45	21.95	23.45	26.45
9.57	10.32	11.07	11.83	12.95	14.07	15.20	16.33	17.83	19.32	20.82	22.33	23.83	26.83
7.13	7.88	8.63	9.38	10.51	11.63	12.76	13.88	15.38	16.89	18.39	19.89	21.39	24.39
9.95	10.70	11.45	12.20	13.33	14.45	15.58	16.70	18.20	19.70	21.20	22.70	24.20	27.20
7.51	8.26	9.01	9.76	10.88	12.01	13.14	14.26	15.76	17.26	18.76	20.26	21.76	24.76
7.88	8.63	9.38	10.13	11.26	12.38	13.51	14.64	16.13	17.64	19.13	20.64	22.14	25.14
10.32†	11.07†	11.83†	12.58†	13.70†	14.83†	15.95†	17.08†	18.57†	20.08†	21.58†	23.08†	24.58†	27.58
8.26	9.01	9.76	10.51	11.63	12.76	13.88	15.01	16.51	18.01	19.51	21.01	22.51	25.51
....	....	5.99	6.74	7.87	9.00	10.12	11.25	12.75	14.25	15.75	17.25	18.76	21.76
8.63	9.38	10.13	10.88	12.01	13.13	14.26	15.38	16.89	18.39	19.89	21.39	22.89	25.89
10.70‡	11.45‡	12.20‡	12.95‡	14.08‡	15.20‡	16.33‡	17.45‡	18.95‡	20.45‡	21.95‡	23.45‡	24.95‡	27.95‡
9.01	9.76	10.51	11.26	12.39	13.51	14.64	15.76	17.26	18.76	20.26	21.76	23.36	26.26
7.31	8.06	8.81	9.57	10.69	11.82	12.94	14.11	15.57	17.07	18.57	20.07	21.57	24.57
....	....	....	....	....	7.45	8.58	9.36	10.86	12.36	13.87	15.37	16.87	19.87
5.99	6.74	7.49	8.25	9.37	10.50	11.62	12.75	14.25	15.75	17.26	18.76	20.26	23.26
7.69	8.44	9.19	9.04	11.07	12.19	13.32	14.44	15.94	17.45	18.95	20.45	21.95	24.95
9.38	10.13	10.88	11.64	12.76	13.89	15.01	16.13	17.64	19.14	20.64	22.14	23.64	26.64
8.06	8.81	9.57	10.32	11.44	12.57	13.69	14.82	16.32	17.82	19.32	20.82	22.32	25.32
9.76	10.51	11.26	12.01	13.14	14.26	15.39	16.51	18.01	19.51	21.01	22.51	24.01	27.01
8.44	9.19	9.94	10.69	11.82	12.94	14.11	15.20	16.70	18.20	19.70	21.20	22.70	25.70
6.17	6.92	7.67	8.43	9.55	10.68	11.81	12.93	14.44	15.94	17.44	18.94	20.44	23.44
7.49	8.25	9.00	9.75	10.88	12.00	13.13	14.25	15.75	17.26	18.76	20.26	21.76	24.76
8.82	9.57	10.32	11.07	12.19	13.32	14.45	15.57	17.07	18.57	20.07	21.57	23.07	26.07
10.13†	10.88†	11.64†	12.39†	13.51†	14.64†	15.76†	16.89†	18.39†	19.89†	21.39†	22.89†	24.39†	27.39†
7.87	8.62	9.37	10.13	11.25	12.38	13.50	14.63	16.13	17.63	19.13	20.63	22.13	25.13
9.19	9.94	10.69	11.44	12.57	13.70	14.82	15.95	17.45	18.95	20.45	21.95	23.45	26.45
8.25	9.00	9.75	10.50	11.63	12.75	13.88	15.00	16.51	18.01	19.51	21.01	22.51	25.51
10.51‡	11.26‡	12.01‡	12.76‡	13.89‡	15.01‡	16.14‡	17.26‡	18.76‡	20.26‡	21.77‡	23.36‡	24.76‡	27.76‡
6.34	7.10	7.85	8.60	9.73	10.86	11.99	13.12	14.62	16.12	17.62	19.12	20.63	23.63
9.57	10.32	11.07	11.82	12.95	14.11	15.20	16.32	17.82	19.32	20.82	22.32	23.82	26.82

L Belt Width Table

Belt Width Factor	.28	.35	.45	.57	.71	.86	1.00	1.29	1.56	1.84	2.14	2.72	3.36
Belt Width	3/8	7/16	1/2	5/8	3/4	7/8	1	1-1/4	1-1/2	1-3/4	2	2-1/2	3
Belt Width Code	037	043	050	062	075	087	100	125	150	175	200	250	300

Teeth in Mesh Factor (T.I.M)

Table Symbol	No. of Teeth In Mesh In Small Pulley	Factor
None	6 or More	1.00
†	5	.80

Table Symbol	No. of Teeth In Mesh In Small Pulley	Factor
‡	4	.60

FEATURES/BENEFITS PAGE PT10-2	SPECIFICATIONS PAGE PT10-3	SELECTION PAGE PT10-14	ENGINEERING/TECHNICAL PAGE PT10-44

SELECTION

L Stock Drive Selections

Driven Speeds for Motor Speeds of			Speed Ratio	Pulley Combination				HP for a 1 Wide Belt for Motor Speeds of Δ			Nominal C.D. Using DYNA-SYNC Belts					
				Driver		Driven										
3500	1750	1160		No. of Teeth	Pitch Diam.	No. of Teeth	Pitch Diam.	3500	1750	1160	124L	150L	187L	210L	225L	240L
2423	1212	803	1.44	18L	2.149	26L	3.104	3.15	1.62	1.08	....	....	5.24	6.37	7.12	7.87
2406	1203	798	1.45	22L	2.626	32L	3.820	3.77	1.98	1.32	....	....	4.28	5.41	6.17	6.92
2333	1167	733	1.50	48L	5.730	72L	8.594	6.27	4.06	2.81	....	....	....	....	....	....
2333	1167	733	1.50	40L	4.775	60L	7.162	5.87	3.47	2.36	....	....	....	....	....	....
2333	1167	733	1.50	32L	3.820	48L	5.730	5.10	2.83	1.91	....	....	....	....	....	....
2333	1167	733	1.50	20L	2.387	30L	3.581	3.46	1.80	1.20	....	....	4.66	5.79	6.54	7.30
2333	1167	733	1.50	16L	1.910	24L	2.865	2.83	1.45	.97	....	3.73	5.61	6.74	7.50	8.25
....	1167	733	1.50	12L	1.432	18L	2.149	....	1.09◊	.72	3.36†	4.68†	6.56†	7.69†	8.44†	9.19†
2275	1138	754	1.54	26L	3.104	40L	4.775	4.35	2.32	1.56	....	....	....	4.24	5.00	5.76
2250	1125	746	1.56	18L	2.149	28L	3.342	3.15	1.62	1.08	....	....	5.04	6.07	6.92	7.67
2227	1114	738	1.57	14L	1.671	22L	2.626	2.49◊	1.27	.85	2.78	4.11	5.99	7.12	7.87	8.62
2188	1094	725	1.60	30L	3.581	48L	5.730	4.86	2.66	1.79	....	....	....	....	....	....
2188	1094	725	1.60	20L	2.387	32L	3.820	3.46	1.80	1.20	....	....	4.45	5.59	6.34	7.10
....	1094	725	1.60	10L	1.194	16L	1.910	....	.91◊	.60◊	3.74‡	5.06‡	6.94‡	8.07‡	8.82‡	9.57‡
2154	1077	714	1.63	16L	1.910	26L	3.104	2.83	1.45	.97	....	3.52	5.41	6.55	7.30	8.05
2100	1050	696	1.67	24L	2.865	40L	4.775	4.06	2.15	1.44	....	....	....	4.40	5.17	5.93
2100	1050	696	1.67	18L	2.149	30L	3.581	3.15	1.62	1.08	....	2.92	4.83	5.97	6.72	7.48
....	1050	696	1.67	12L	1.432	20L	2.387	....	1.09◊	.72	3.16†	4.48†	6.37†	7.50†	8.25†	9.00†
2042	1021	677	1.71	28L	3.342	48L	5.730	4.61	2.49	1.67	....	....	....	....	....	4.73
2042	1021	677	1.71	14L	1.671	24L	2.865	2.49◊	1.27	.85	....	3.90	5.79	6.92	7.67	8.43
2000	1000	663	1.75	48L	5.730	84L	10.027	6.27	4.06	2.81	....	....	....	....	....	....
2000	1000	663	1.75	16L	1.910	28L	3.342	2.83	1.45	.97	....	....	5.21	6.34	7.10	7.85
1969	985	652	1.78	18L	2.149	32L	3.820	3.15	1.62	1.08	....	....	4.62	5.76	6.52	7.27
1944	972	644	1.80	40L	4.775	72L	8.594	5.87	3.47	2.36	....	....	....	....	....	....
....	972	644	1.80	10L	1.194	18L	2.149	....	.91◊	.60◊	3.54‡	4.86‡	6.74‡	7.87‡	8.62‡	9.38‡
1925	963	638	1.82	22L	2.626	40L	4.775	3.77	1.98	1.32	....	....	....	4.57	5.34	6.10
....	955	633	1.83	12L	1.432	22L	2.626	....	1.09◊	.72	2.95†	4.28†	6.17†	7.50†	8.05†	8.80†
1896	948	628	1.85	26L	3.104	48L	5.730	4.35	2.32	1.56	....	....	....	....	....	4.89
1885	942	625	1.86	14L	1.671	26L	3.104	2.49◊	1.27	.85	....	3.69	5.59	6.72	7.48	8.23
1867	933	619	1.88	32L	3.820	60L	7.162	5.10	2.83	1.91	....	....	....	....	....	....
1867	933	619	1.88	16L	1.910	30L	3.581	2.83	1.45	.97	....	....	5.00	6.14	6.90	7.65
1750	875	580	2.00	30L	3.581	60L	7.162	4.86	2.66	1.79	....	....	....	....	....	....
1750	875	580	2.00	24L	2.865	48L	5.730	4.06	2.15	1.44	....	....	....	....	....	5.05
1750	875	580	2.00	20L	2.387	40L	4.775	3.46	1.80	1.20	....	....	....	4.73	5.50	6.27
1750	875	580	2.00	16L	1.910	32L	3.820	2.83	1.45	.97	....	....	4.79	5.93	6.69	7.45
1750	875	580	2.00	14L	1.671	28L	3.342	2.49	1.27	.85	....	3.47	5.38	6.52	7.27	8.03
....	875	580	2.00	12L	1.432	24L	2.865	....	1.09◊	.72	2.72†	4.07†	5.97†	7.10†	7.85†	8.61†
....	875	580	2.00	10L	1.194	20L	2.387	....	.91◊	.60◊	3.33‡	4.66‡	6.55‡	7.68‡	8.43‡	9.18‡
1667	833	552	2.10	40L	4.775	84L	10.027	5.87	3.47	2.36	....	....	....	....	....	....
1633	817	541	2.14	28L	3.342	60L	7.162	4.61	2.49	1.67	....	....	....	....	....	....
1633	817	541	2.14	14L	1.671	30L	3.581	2.49◊	1.27	.85	....	3.24†	5.17	6.31	7.07	7.83
....	808	535	2.17	12L	1.432	26L	3.104	....	1.09◊	.72	....	3.85†	5.76†	6.90†	7.65†	8.41†
1604	802	532	2.18	22L	2.626	48L	5.730	3.77	1.98	1.32	....	....	....	....	....	5.21
....	795	527	2.20	10L	1.194	22L	2.626	....	.91◊	.60◊	3.11‡	4.45‡	6.35‡	7.48‡	8.23‡	8.98‡
1575	788	522	2.22	18L	2.149	40L	4.775	3.15	1.62	1.08	....	....	....	4.89	5.67	6.44
1556	778	516	2.25	32L	3.820	72L	8.594	5.10	2.83	1.91	....	....	....	....	....	....
1531	766	507	2.29	14L	1.671	32L	3.820	2.49◊	1.27	.85	....	....	4.95†	6.10	6.86	7.62
1517	758	503	2.31	26L	3.104	60L	7.162	4.35	2.32	1.56	....	....	....	....	....	....

Δ HP ratings are for conventional speed-reduction drives.
For Speed-Up Drives refer to page PT10-17.

◊ Pulley Diameter is below recommended minimum. A reduction in belt life should be expected. Suggest alternate drive selection, whenever possible.

† ‡ See Teeth in Mesh table on opposite page.

L Stock Drive Selections

Nominal Center Distance Using DYNA-SYNC Belts

255L	270L	285L	300L	322L	345L	367L	390L	420L	450L	480L	510L	540L	600L
8.62	9.37	10.13	10.88	12.00	13.13	14.25	15.38	16.88	18.38	19.88	21.38	22.88	25.88
7.67	8.43	9.18	9.93	11.06	12.18	13.31	14.44	15.94	17.44	18.94	20.44	21.94	24.94
....	....	....	....	....	....	....	8.13	9.65	11.17	12.68	14.19	15.69	18.70
....	....	....	....	6.65	7.79	8.93	10.06	11.57	13.08	14.59	16.09	17.60	20.60
5.17	5.93	6.69	7.45	8.58	9.71	10.84	11.97	13.48	14.98	16.48	17.99	19.49	22.49
8.05	8.80	9.55	10.31	11.43	12.56	13.69	14.81	16.31	17.81	19.32	20.82	22.32	25.32
9.00	9.75	10.50	11.24	12.38	13.50	14.63	15.76	17.26	18.76	20.26	21.76	23.26	26.26
9.94†	10.69†	11.44†	12.20†	13.32†	14.45†	15.57†	16.70†	18.20†	19.70†	21.20†	22.70†	24.20†	27.20†
6.52	7.27	8.03	8.78	9.91	11.04	12.17	13.30	14.80	16.30	17.80	19.31	20.81	23.81
8.43	9.18	9.93	10.68	11.81	12.94	14.06	15.19	16.69	18.19	19.69	21.19	22.69	25.69
9.37	10.13	10.88	11.63	12.75	13.88	15.00	16.13	17.63	19.13	20.63	22.13	23.63	26.63
5.34	6.10	6.86	7.62	8.75	9.89	11.02	12.15	13.66	15.16	16.66	18.17	19.67	22.67
7.85	8.60	9.36	10.11	11.24	12.37	13.49	14.62	16.12	17.62	19.12	20.63	22.13	25.13
10.32‡	11.07‡	11.82‡	12.57‡	13.70‡	14.82‡	15.95‡	17.07‡	18.57‡	20.07‡	21.57‡	23.07‡	24.57‡	27.57‡
8.80	9.55	10.31	11.06	12.19	13.31	14.44	15.56	17.06	18.56	20.07	21.57	23.07	26.07
6.69	7.45	8.20	8.96	10.09	11.22	12.35	13.48	14.98	16.48	17.99	19.49	20.99	23.99
8.23	8.98	9.73	10.49	11.61	12.74	13.87	14.99	16.50	18.00	19.50	21.00	22.50	25.50
9.75†	10.50†	11.25†	12.00†	13.13†	14.25†	15.38†	16.51†	18.01†	19.51†	21.01†	22.51†	24.01†	27.01†
5.50	6.27	7.03	7.79	8.93	10.06	11.20	12.33	13.83	15.34	16.84	18.35	19.85	22.86
9.18	9.93	10.68	11.43	12.56	13.69	14.81	15.94	17.44	18.94	20.44	21.94	23.44	26.44
....	....	....	....	....	....	....	....	8.35	9.90	11.43	12.96	14.47	17.50
8.61	9.36	10.11	16.86	11.99	13.12	14.24	15.37	16.87	18.37	19.88	21.38	22.88	25.88
8.03	8.78	9.53	10.29	11.42	12.55	13.67	14.80	16.30	17.80	19.31	20.81	22.31	25.31
....	....	....	....	....	....	7.64	8.80	10.33	11.85	13.37	14.89	16.40	19.42
10.13‡	10.88‡	11.63‡	12.38‡	13.51‡	14.63‡	15.76‡	16.88‡	18.38‡	19.88‡	21.38‡	22.88‡	24.38‡	27.39‡
6.86	7.62	8.38	9.13	10.27	11.40	12.53	13.66	15.16	16.66	18.17	19.67	21.17	24.18
9.56†	10.13†	11.06†	11.81†	12.94†	14.06†	15.19†	16.32†	17.82†	19.32†	20.82†	22.32†	23.82†	26.82†
5.67	6.43	7.20	7.96	9.10	10.24	11.37	12.50	14.01	15.52	17.02	18.53	20.03	23.04
8.98	9.73	10.49	11.24	12.37	13.49	14.62	15.75	17.25	18.75	20.25	21.75	23.25	26.25
....	....	....	6.15	7.32	8.47	9.61	10.75	12.27	13.78	15.29	16.80	18.31	21.32
8.41	9.16	9.91	10.67	11.80	12.92	14.05	15.18	16.68	18.18	19.68	21.18	22.68	25.69
....	....	....	6.31	7.48	8.63	9.78	10.92	12.44	13.96	15.47	16.98	18.49	21.50
5.83	6.60	7.37	8.13	9.27	10.41	11.55	12.68	14.19	15.70	17.20	18.71	20.21	23.22
7.03	7.79	8.55	9.31	10.44	11.57	12.70	13.83	15.34	16.84	18.35	19.85	21.35	24.36
8.20	8.96	9.71	10.47	11.60	12.73	13.85	14.98	16.48	17.99	19.49	29.99	22.49	25.50
8.78	9.54	10.29	11.04	12.17	13.30	14.43	15.55	17.05	18.56	20.06	21.56	23.06	26.06
9.36†	10.11†	10.86†	11.62†	12.74†	13.87†	15.00†	16.12†	17.62†	19.13†	20.63†	22.13†	23.62†	26.63†
9.93‡	10.68‡	11.43‡	12.19‡	13.31‡	14.44‡	15.56‡	16.69‡	18.19‡	19.69‡	21.19‡	22.69‡	24.19‡	27.20‡
....	....	....	....	....	....	....	....	9.00	10.55	12.10	13.63	15.16	18.19
....	....	5.68	6.47	7.64	8.80	9.95	11.69	12.61	14.13	15.64	17.15	18.66	21.68
8.58	9.34	10.09	10.85	11.97	13.10	14.23	15.36	16.86	18.36	19.86	21.37	22.87	25.87
9.16†	9.91†	10.67†	11.42†	12.55†	13.67†	14.80†	15.93†	17.43†	18.93†	20.43†	21.94†	23.44†	26.44†
5.99	6.77	7.54	8.30	9.44	10.58	11.72	12.85	14.36	15.87	17.38	18.89	20.39	23.40
9.74‡	10.49‡	11.24‡	11.99‡	13.12‡	14.24‡	15.37‡	16.50‡	18.00‡	19.50‡	21.00‡	22.50‡	24.00‡	27.01‡
7.20	7.96	8.72	9.48	10.62	11.75	12.88	14.01	15.52	17.02	18.53	20.03	21.53	24.54
....	....	....	....	....	7.10	8.29	9.45	11.00	12.53	14.06	15.58	17.09	20.12
8.38	9.13	9.89	10.64	11.77	12.90	14.03	15.16	16.67	18.17	19.67	21.17	22.68	25.68
....	....	5.84	6.63	7.80	8.97	10.12	11.26	12.79	14.30	15.82	17.33	18.84	21.85

L Belt Width Table

Belt Width Factor	.28	.35	.45	.57	.71	.86	1.00	1.29	1.56	1.84	2.14	2.72	3.36
Belt Width	3/8	7/16	1/2	5/8	3/4	7/8	1	1-1/4	1-1/2	1-3/4	2	2-1/2	3
Belt Width Code	037	043	050	062	075	087	100	125	150	175	200	250	300

Teeth in Mesh Factor (T.I.M)

Table Symbol	No. of Teeth In Mesh In Small Pulley	Factor
None	6 or More	1.00
†	5	.80

Table Symbol	No. of Teeth In Mesh In Small Pulley	Factor
‡	4	.60

FEATURES/BENEFITS PAGE PT10-2 | SPECIFICATIONS PAGE PT10-3 | SELECTION PAGE PT10-14 | ENGINEERING/TECHNICAL PAGE PT10-44

SELECTION

L Stock Drive Selections

Driven Speeds for Motor Speeds of			Speed Ratio	Pulley Combination				HP for a 1 Wide Belt for Motor Speeds of Δ			Nominal C.D. Using DYNA-SYNC Belts					
				Driver		Driven										
3500	1750	1160		No. of Teeth	Pitch Diam.	No. of Teeth	Pitch Diam.	3500	1750	1160	124L	150L	187L	210L	225L	240L
....	750	497	2.33	12L	1.432	28L	3.342	....	1.09◊	.72	....	3.63	5.55	6.69	7.45†	8.20†
1458	729	483	2.40	30L	3.581	72L	8.594	4.86	2.66	1.79	....	....	....	....	....	....
1458	729	483	2.40	20L	2.387	48L	5.730	3.46	1.80	1.20	....	....	....	....	4.57	5.37
....	729	483	2.40	10L	1.194	24L	2.865	....	.91◊	.60◊	2.89‡	4.24‡	6.14‡	7.28‡	8.03‡	8.78‡
1400	700	464	2.50	24L	2.865	60L	7.162	4.06	2.15	1.44	....	....	....	....	....	....
1400	700	464	2.50	16L	1.910	40L	4.775	2.83	1.45	.97	....	....	....	5.05	5.83	6.60
....	700	464	2.50	12L	1.432	30L	3.581	....	1.09◊	.72	....	3.40‡	5.34†	6.43†	7.24†	8.00†
1361	681	451	2.57	28L	3.342	72L	8.594	4.61	2.49	1.67	....	....	....	....	....	....
....	673	446	2.60	10L	1.194	26L	3.104	....	.91◊	.60◊	2.64§	4.02‡	5.93‡	7.07‡	7.83‡	8.58‡
1333	667	442	2.63	32L	3.820	84L	10.027	5.10	2.83	1.91	....	....	....	....	....	....
1312	656	435	2.67	18L	2.149	48L	5.730	3.15	1.62	1.08	....	....	....	....	4.73	5.53
....	656	435	2.67	12L	1.432	32L	3.820	....	1.09◊	.72	....	3.15†	5.12†	6.27†	7.03†	7.79†
1283	642	425	2.73	22L	2.626	60L	7.162	3.77	1.98	1.32	....	....	....	....	....	....
1264	632	419	2.77	26L	3.104	72L	8.594	4.35	2.32	1.56	....	....	....	....	....	....
1250	625	414	2.80	30L	3.581	84L	10.027	4.86	2.66	1.79	....	....	....	....	....	....
....	625	414	2.80	10L	1.194	28L	3.342	....	.91◊	.60◊	....	3.79‡	5.72‡	6.86‡	7.62‡	8.38‡
1225	613	406	2.86	14L	1.671	40L	4.775	2.49◊	1.27	.85	....	....	....	5.21	5.99	6.77
1167	583	387	3.00	28L	3.342	84L	10.027	4.61	2.49	1.67	....	....	....	....	....	....
1167	583	387	3.00	24L	2.865	72L	8.594	4.06	2.15	1.44	....	....	....	....	....	....
1167	583	387	3.00	20L	2.387	60L	7.162	3.46	1.80	1.20	....	....	....	....	....	....
1167	583	387	3.00	16L	1.910	48L	5.730	2.83	1.45	.97	....	....	....	....	4.88	5.68
....	583	387	3.00	10L	1.194	30L	3.581	....	.91◊	.60◊	....	3.56§	5.50‡	6.65‡	7.41‡	8.17‡
....	547	363	3.20	10L	1.194	32L	3.820	....	.91◊	.60◊	....	3.30§	5.28‡	6.44‡	7.20‡	7.96‡
1684	542	359	3.23	26L	3.104	84L	10.027	4.35	2.32	1.56	....	....	....	....	....	....
1069	535	354	3.27	22L	2.626	72L	8.594	3.77	1.98	1.32	....	....	....	....	....	....
1050	525	348	3.33	18L	2.149	60L	7.162	3.15	1.62	1.08	....	....	....	....	....	....
....	525	348	3.33	12L	1.432	40L	4.775	....	1.09◊	.72	....	....	4.17‡	5.37‡	6.15‡	6.93‡
1021	510	338	3.43	14L	1.671	48L	5.730	2.49◊	1.27	.85	....	....	....	4.19‡	5.03†	5.84†
1000	500	331	3.50	24L	2.865	84L	10.027	4.06	2.15	1.44	....	....	....	....	....	....
972	486	322	3.60	20L	2.387	72L	8.594	3.46	1.80	1.20	....	....	....	....	....	....
933	467	309	3.75	16L	1.910	60L	7.162	2.83	1.45	.97	....	....	....	....	....	....
916	458	304	3.82	22L	2.626	84L	10.027	3.77	1.98	1.32	....	....	....	....	....	....
875	438	290	4.00	18L	2.149	72L	8.594	3.15	1.62	1.08	....	....	....	....	....	....
....	438	290	4.00	12L	1.432	48L	5.730	....	1.09◊	.72	....	....	....	4.34‡	5.18‡	5.99‡
....	438	290	4.00	10L	1.194	40L	4.775	....	.91◊	.60◊	....		4.33§	5.53§	6.32‡	7.09‡
833	417	276	4.20	20L	2.387	84L	10.027	3.46	1.80	1.20	....	....	....	....	....	....
817	408	271	4.29	14L	1.671	60L	7.162	2.49◊	1.27	.85	....	....	....	....	....	....
778	389	258	4.50	16L	1.910	72L	8.594	2.83	1.45	.97	....	....	....	....	....	....
749	375	248	4.67	18L	2.149	84L	10.027	3.15	1.62	1.08	....	....	....	....	....	....
....	365	242	4.80	10L	1.194	48L	5.730	....	.91◊	.60◊	....	....	....	4.48§	5.33§	6.15§
....	350	232	5.00	12L	1.432	60L	7.162	....	1.09◊	.72	....	....	....	....	....	....
681	340	226	5.14	14L	1.671	72L	8.594	2.49◊	1.27	.85	....	....	....	....	....	....
667	333	221	5.25	16L	1.671	84L	10.027	2.83	1.45	.97	....	....	....	....	....	....
583	292	193	6.00	14L	1.671	84L	10.027	2.49◊	1.27	.85	....	....	....	....	....	....
....	292	193	6.00	12L	1.432	72L	8.594	....	1.09◊	.72	....	....	....	....	....	....
....	292	193	6.00	10L	1.194	60L	7.162	....	.91◊	.60◊	....	....	....	....	....	4.38♣
....	250	166	7.00	12L	1.432	84L	10.027	....	1.09◊	.72	....	....	....	....	....	....
....	243	161	7.20	10L	1.194	72L	8.594	....	.91◊	.60◊	....	....	....	....	....	....
....	208	138	8.40	10L	1.194	84L	10.027	....	.91◊	.60◊	....	....	....	....	....	....

Δ HP ratings are for conventional speed-reduction drives.
For Speed-Up Drives refer to page PT10-17.

◊ Pulley Diameter is below recommended minimum. A reduction in belt life should be expected. Suggest alternate drive selection, whenever possible.

† ‡ § ♣ See Teeth in Mesh table on opposite page.

♥ Flanges Required on both pulleys.

L Stock Drive Selections

Nominal Center Distance Using DYNA-SYNC Belts

255L	270L	285L	300L	322L	345L	367L	390L	420L	450L	480L	510L	540L	600L
8.96†	9.71†	10.47†	11.22†	12.35†	13.48†	14.61†	15.73†	17.24†	18.74†	20.24†	21.74†	23.24†	26.25†
....	....	....	....	....	7.26	8.44	9.62	11.16	12.70	14.23	15.75	17.27	20.29
6.15	6.93	7.70	8.47	9.61	10.75	11.89	13.03	14.54	16.05	17.56	19.06	20.57	23.58
9.54‡	10.29‡	11.04‡	11.80‡	12.92‡	14.05‡	15.18‡	16.30‡	17.81‡	19.31‡	20.81‡	22.31‡	23.81‡	26.81‡
....	....	5.99	6.79	7.97	9.13	10.28	11.43	12.96	14.48	15.99	17.50	19.01	22.03
7.37	8.13	8.89	9.65	10.79	11.92	13.06	14.19	15.70	17.20	18.71	20.21	21.72	24.72
8.76†	9.51†	10.27†	11.02†	12.15†	13.28†	14.41†	15.54†	17.04†	18.54†	20.05†	21.55†	23.05†	26.05†
....	....	....	...	6.19	7.41	8.60	9.78	11.33	12.86	14.39	15.92	17.44	20.47
9.34‡	10.09‡	10.85‡	11.60‡	12.73‡	13.85‡	14.98‡	16.11‡	17.61‡	19.11‡	20.62‡	22.12‡	23.62‡	26.62‡
....	....	....	....	....	....	....	8.02	9.63	11.20	12.75	14.30	15.83	18.88
6.31	7.09	7.87	8.64	9.78	10.92	12.06	13.20	14.72	16.23	17.73	19.24	20.75	23.76
8.55†	9.31†	10.07†	10.82†	11.95†	13.08†	14.21†	15.34†	16.85†	18.35†	19.85†	21.36†	22.86†	25.86†
....	5.33	6.15	6.95	8.13	9.29	10.45	11.60	13.18	14.65	16.16	17.68	19.19	22.21♥
....	....	....	....	6.34	7.56	8.76	9.94	11.49	13.03	14.56	16.09	17.61	20.64
....	....	....	....	....	....	....	8.17	9.78	11.36	12.92	14.46	16.00	19.05
9.14‡	9.89‡	10.65‡	11.40‡	12.53‡	13.66‡	14.79‡	15.91‡	17.42‡	18.92‡	20.42‡	21.92‡	23.43‡	26.43‡
7.54	8.30	9.06	9.83	10.96	12.10	13.23	14.36	15.87	17.38	18.89	20.39	21.89	24.90
....	....	....	....	....	....	7.08	8.33	9.94	11.52	13.08	14.63	16.16	19.22
....	....	....	....	6.49	7.72	8.92	10.10	11.65	13.20	14.73	16.26	17.78	20.81
....	5.48	6.30	7.10	8.29	9.46	10.61	11.77	13.29	14.82	16.34	17.85	19.36♥	22.38♥
6.47	7.26	8.03	8.80	9.95	11.10	12.24	13.37	14.89	16.40	17.91	19.42	20.93	23.94
8.93‡	9.69‡	10.44‡	11.20‡	12.33‡	13.46‡	14.59‡	15.72‡	17.22‡	18.73‡	20.23‡	21.73‡	23.23‡	26.24‡
8.72‡	9.48‡	10.24‡	11.00‡	12.13‡	13.26‡	14.39‡	15.52‡	17.02‡	18.53‡	20.03‡	21.54‡	23.04‡	26.04‡
....	....	....	....	....	....	7.22	8.48	10.10	11.68	13.24	14.79	16.33	19.39
....	....	....	....	6.64	7.87	9.07	10.26	11.82	13.36	14.90	16.43	17.95	20.99
....	5.62	6.45	7.26	8.45	9.62	10.78	11.93	13.46	14.99	16.51	18.02♥	19.54♥	22.56♥
7.70†	8.47†	9.23†	10.00†	11.14†	12.27†	13.40†	14.54†	16.05†	17.56†	19.06†	20.57†	22.08†	25.08†
6.63†	7.42†	8.19†	8.97†	10.12	11.26	12.41	13.55	15.06	16.57	18.08	19.59	21.10	24.11
....	....	....	....	....	....	7.37	8.63	10.25	11.84	13.40	14.95	16.49	19.56
....	....	....	....	6.78	8.02	9.23	10.42	11.98	13.53	15.06	16.59	18.12	21.16
4.91	5.77	6.60	7.41	8.60	9.78	10.94	12.10	13.63	15.16	16.68♥	18.20♥	19.71♥	22.73♥
....	....	....	....	....	....	7.51	8.78	10.40	12.00	13.56	15.12	16.66	19.18
....	....	....	5.61†	6.93	8.18	9.39	10.58	12.14	13.69	15.23	16.76	18.29♥	21.33♥
6.79‡	7.58‡	8.36‡	9.13†	10.28†	11.43†	12.58†	13.72†	15.23†	16.75†	18.25†	19.77†	21.28†	24.29†
7.87‡	8.64‡	9.40‡	10.17‡	11.31‡	12.44‡	13.58‡	14.72‡	16.23‡	17.73‡	19.24‡	20.75‡	22.25‡	25.26‡
....	....	....	....	....	....	7.66	8.93	10.56	12.15	13.72	15.28	16.82	19.89♥
5.05‡	5.92‡	6.75†	7.57†	8.76†	9.94†	11.11†	12.26†	13.80♥	15.33♥	16.85♥	18.37♥	19.83♥	22.91♥
....	....	....	5.75‡	7.08†	8.33†	9.54	10.73	12.30	13.85	15.40♥	16.93♥	18.46♥	21.50♥
....	....	....	....	....	6.45†	7.80†	9.08	10.71	12.31	13.88	15.44	16.99	20.06♥
6.95	7.74‡	8.52‡	9.29‡	10.45‡	11.60‡	12.75‡	13.89‡	15.41‡	16.92‡	18.44‡	19.95‡	21.46‡	24.47‡
5.19§	6.07‡	6.90‡	7.72‡	8.92‡	10.10‡	11.274	12.43†♥	13.97†♥	15.49†♥	17.02†♥	18.54†♥	20.06†♥	23.08†♥
....	....	....	5.89‡	7.22‡	8.48†	9.70†	10.89†	12.46†	14.02†♥	15.56†♥	17.10♥	18.63♥	21.67♥
....	....	....	....	....	6.58‡	7.94†	9.22†	10.87	12.47	14.04	15.60♥	17.15♥	20.23♥
....	....	....	....	....	6.72‡	8.09‡	9.37‡	11.02†	12.62†	14.20†♥	15.76†♥	17.32†♥	20.39♥
....	....	....	6.03§	7.37	8.63‡	9.85‡	11.05‡	12.62†♥	14.18†♥	15.73†♥	17.26†♥	18.79†♥	21.84†♥
5.33§	6.21§	7.05§	7.87§	9.08§	10.26†♥	11.43†♥	12.59†♥	14.13‡♥	15.66‡♥	17.19‡♥	18.71‡♥	20.23‡♥	23.26‡♥
....	....	....	....	....	6.86§	8.23§	9.52‡	11.17‡♥	12.78‡♥	14.36‡♥	15.93‡♥	17.48†♥	20.56†♥
....	....	....	6.17♥	7.51§	8.78§	10.00§♥	11.20§♥	12.78‡♥	14.34‡♥	15.89‡♥	17.43‡♥	18.96‡♥	22.01‡♥
....	....	....	....	....	7.00§	8.37§	9.67§♥	11.32§♥	12.93§♥	14.52‡♥	16.09‡♥	17.64‡♥	20.73‡♥

L Belt Width Table

Belt Width Factor	.28	.35	.45	.57	.71	.86	1.00	1.29	1.56	1.84	2.14	2.72	3.36
Belt Width	3/8	7/16	1/2	5/8	3/4	7/8	1	1-1/4	1-1/2	1-3/4	2	2-1/2	3
Belt Width Code	037	043	050	062	075	087	100	125	150	175	200	250	300

Teeth in Mesh factor (T.I.M)

Table Symbol	No. of Teeth In Mesh In Small Pulley	Factor
None	6 or More	1.00
†	5	.80
‡	4	.60

Table Symbol	No. of Teeth In Mesh In Small Pulley	Factor
§	3	.40
ß	2	.20

FEATURES/BENEFITS PAGE PT10-2 | SPECIFICATIONS PAGE PT10-3 | SELECTION PAGE PT10-14 | ENGINEERING/TECHNICAL PAGE PT10-44

SELECTION

H Stock Drive Selections

Driven Speeds for Motor Speeds of			Speed Ratio	Pulley Combination				HP for a 1 Wide Belt for Motor Speeds of Δ			Nominal C.D. Using DYNA-SYNC Belts						
				Driver		Driven											
3500	1750	1160		No. of Teeth	Pitch Diam.	No. of Teeth	Pitch Diam.	3500	1750	1160	240H	270H	300H	330H	360H	390H	420H
....	1750	1160	1.00	48H	7.839	48H	7.639	....	13.84	9.55	....	....	....	....	....	....	9.01
3500	1750	1160	1.00	40H	6.366	40H	6.366	20.08	11.79	8.03	....	....	....	....	8.01	9.51	11.01
3500	1750	1160	1.00	32H	5.093	32H	5.093	17.40	9.60	6.48	....	5.51	7.01	8.51	10.01	11.51	13.01
3500	1750	1160	1.00	30H	4.775	30H	4.775	16.59	9.03	6.08	....	6.01	7.51	9.01	10.51	12.01	13.51
3500	1750	1160	1.00	28H	4.456	28H	4.456	15.74	8.46	5.68	5.01	6.51	8.01	9.51	11.01	12.51	14.01
3500	1750	1160	1.00	26H	4.138	26H	4.138	14.80	7.88	5.28	5.51	7.01	8.51	10.01	11.51	13.01	14.51
3500	1750	1160	1.00	24H	3.820	24H	3.820	13.82	7.30	4.89	6.01	7.51	9.01	10.51	12.01	13.51	15.01
3500	1750	1160	1.00	22H	3.501	22H	3.501	12.84	6.71	4.48	6.51	8.01	9.51	11.01	12.51	14.01	15.51
3500	1750	1160	1.00	20H	3.183	20H	3.183	11.77◊	6.11	4.08	7.01	8.51	10.01	11.51	13.01	14.51	16.01
3500	1750	1160	1.00	18H	2.865	18H	2.865	10.71◊	5.52◊	3.68	7.51	9.01	10.51	12.01	13.51	15.01	16.51
....	1750	1160	1.00	16H	2.546	16H	2.546	....	4.91◊	3.27◊	8.01	9.51	11.01	12.51	14.01	15.51	17.01
....	....	1160	1.00	14H	2.228	14H	2.228	....	....	2.86◊	8.51	10.01	11.51	13.01	14.51	16.01	17.51
3281	1641	1087	1.07	30H	4.775	32H	5.093	16.59	9.03	6.08	....	5.75	7.25	8.76	10.26	11.76	13.26
3267	1633	1083	1.07	28H	4.456	30H	4.775	15.74	8.46	5.68	....	6.25	7.26	9.26	10.76	12.26	13.76
3250	1625	1077	1.08	26H	4.138	28H	4.456	14.80	7.88	5.28	5.25	6.75	8.26	9.76	11.26	12.76	14.26
3231	1615	1071	1.08	24H	3.820	26H	4.138	13.82	7.30	4.89	5.76	7.26	8.76	10.26	11.76	13.26	14.76
3208	1604	1063	1.09	22H	3.501	24H	3.820	12.84	6.71	4.48	6.26	7.76	9.26	10.76	12.26	13.76	15.26
3182	1591	1055	1.10	20H	3.183	22H	3.501	11.77◊	6.11	4.08	6.76	8.26	9.76	11.26	12.76	14.26	15.75
3150	1575	1044	1.11	18H	2.865	20H	3.183	10.71◊	5.52◊	3.68	7.26	8.76	10.26	11.76	13.26	14.76	16.26
....	1556	1031	1.13	16H	2.546	18H	2.865	....	4.91◊	3.27◊	7.76	9.26	10.76	12.26	13.76	15.26	16.76
3063	1531	1015	1.14	28H	4.456	32H	5.093	15.74	8.46	5.68	....	6.00	7.50	9.00	10.50	12.01	13.51
....	....	1015	1.14	14H	2.228	16H	2.546	....	....	2.86◊	8.26	9.76	11.26	12.76	14.26	15.76	17.26
3033	1517	1005	1.15	26H	4.138	30H	4.775	14.80	7.88	5.28	5.00	6.50	8.00	9.50	11.00	12.51	14.01
3000	1500	994	1.17	24H	3.820	28H	4.456	13.82	7.30	4.89	5.50	7.00	8.50	10.00	11.50	13.01	14.51
2962	1481	982	1.18	22H	3.501	26H	4.138	12.84	6.71	4.48	6.00	7.50	9.00	10.50	12.01	13.50	15.01
2917	1458	967	1.20	40H	6.366	48H	7.639	20.08	11.79	8.03	....	....	....	....	....	8.48	9.99
2917	1458	967	1.20	20H	3.183	24H	3.820	11.77◊	6.11	4.08	6.50	8.00	9.50	11.00	12.51	14.01	15.51
2864	1432	949	1.22	18H	2.865	22H	3.501	10.71◊	5.52◊	3.68	7.01	8.50	10.00	11.51	13.01	14.51	16.01
2844	1422	943	1.23	26H	4.138	32H	5.093	14.80	7.88	5.28	....	6.24	7.74	9.24	10.75	12.25	13.75
....	1400	928	1.25	48H	7.639	60H	9.549	....	13.84	9.55	....	....	....	....	....	....	....
2800	1400	928	1.25	32H	5.093	40H	6.366	17.40	9.60	6.48	....	....	....	7.43	8.98	10.49	11.99
2800	1400	928	1.25	24H	3.820	30H	4.775	13.82	7.30	4.89	5.24	6.40	8.24	9.75	11.25	12.75	14.25
....	1400	928	1.25	16H	2.546	20H	3.183	....	4.91◊	3.27◊	7.50	9.00	10.50	12.01	13.51	15.01	16.51
2750	1375	911	1.27	22H	3.501	28H	4.456	12.84	6.71	4.48	5.74	7.24	8.74	10.25	11.75	13.25	14.75
....	....	902	1.29	14H	2.228	18H	2.865	....	....	2.86◊	8.00	9.50	11.01	12.51	14.01	15.51	17.02
2692	1346	892	1.30	20H	3.183	26H	4.138	11.77◊	6.11	4.08	6.24	7.74	9.25	10.75	12.25	13.75	15.26
2625	1313	870	1.33	30H	4.775	40H	6.366	16.59	9.03	6.08	....	....	6.20	7.72	9.22	10.73	12.24
2625	1313	870	1.33	24H	3.820	32H	5.093	13.82	7.30	4.89	4.97	6.48	7.98	9.49	10.99	12.49	14.00
2625	1313	870	1.33	18H	2.865	24H	3.820	10.71◊	5.52◊	3.68	6.74	8.24	9.75	11.25	12.75	14.25	15.76
2567	1283	851	1.36	22H	3.501	30H	4.775	12.84	6.71	4.48	5.47	6.98	8.48	9.99	11.49	12.99	14.50
....	1273	844	1.38	16H	2.546	22H	3.501	....	4.91◊	3.27◊	7.24	8.75	10.25	11.75	13.25	14.75	16.25
2500	1250	829	1.40	20H	3.183	28H	4.456	11.77◊	6.11	4.08	5.97	7.48	8.99	10.49	11.99	13.49	15.00
2450	1225	812	1.43	28H	4.456	40H	6.366	15.74	8.46	5.68	....	....	6.50	7.95	9.46	10.97	12.47
....	....	812	1.43	14H	2.228	20H	3.183		....	2.86◊	7.75	9.25	10.75	12.25	13.75	15.25	16.75
2423	1212	803	1.44	18H	2.865	26H	4.138	10.71◊	5.52◊	3.68	6.48	7.98	9.49	10.99	12.49	14.00	15.50
2406	1203	798	1.45	22H	3.501	32H	5.093	12.84	6.71	4.48	5.20	6.71	8.22	9.73	11.23	12.73	14.24

Δ HP ratings are for conventional speed-reduction drives.
For Speed-Up Drives refer to page PT10-17.

◊ Pulley Diameter is below recommended minimum. A reduction in belt life should be expected. Suggest alternate drive selection, whenever possible.

♥ Flanges Required on both pulleys.

H Stock Drive Selections

Nominal Center Distance Using DYNA-SYNC Belts

450H	480H	510H	540H	570H	600H	630H	660H	700H	750H	800H	850H	900H	1000H	1100H	1250H	1400H	1700H
10.51	12.01	13.51	15.01	16.51	18.01	19.51	21.01	23.01	25.51	28.01	30.51	33.01	38.01	43.01	50.51	58.01	73.01
12.51	14.01	15.51	17.01	18.51	20.01	21.51	23.01	25.01	27.51	30.01	32.51	35.01	40.01	45.01	52.51	60.01	15.01
14.51	16.01	17.51	19.01	20.51	22.01	23.51	25.01	27.01	29.51	32.01	34.51	37.01	42.01	47.01	54.51	62.01	77.01
15.01	16.51	18.01	19.51	21.01	22.51	24.01	25.51	27.51	30.01	32.51	35.01	37.51	42.51	47.51	55.01	62.51	77.51
15.51	17.01	18.51	20.01	21.51	23.01	24.51	26.01	28.01	30.51	33.01	35.51	38.01	43.01	48.01	55.51	63.01	78.01
16.01	17.51	19.01	20.51	22.01	23.51	25.01	26.51	28.51	31.01	33.51	36.01	38.51	43.51	48.51	56.01	63.51	78.51
16.51	18.01	19.51	21.01	22.51	24.01	25.51	27.01	29.01	31.51	34.01	36.51	39.01	44.01	49.01	56.51	64.01	79.01
17.01	18.51	20.01	21.51	23.01	24.51	26.01	27.51	29.51	32.01	34.51	37.01	39.51	44.51	49.51	57.01	64.51	79.51
17.51	19.01	20.51	22.01	23.51	25.01	26.51	28.01	30.01	32.51	35.01	37.51	40.01	45.01	50.01	57.51	65.01	80.01
18.01	19.51	21.01	22.51	24.01	25.51	27.01	28.51	30.51	33.01	35.51	38.01	40.51	45.51	50.51	58.01	65.51	80.51
18.51	20.01	21.51	23.01	24.51	26.01	27.51	29.01	31.01	33.51	36.01	38.51	41.01	46.01	51.01	58.51	66.01	81.01
19.01	20.51	22.01	23.51	25.01	26.51	28.01	29.51	31.51	34.01	36.51	39.01	41.51	46.51	51.51	59.01	66.51	81.51
14.76	16.26	17.76	19.26	20.76	22.26	23.76	25.26	27.26	29.76	32.26	34.76	37.26	42.26	47.26	54.16	62.26	77.26
15.26	16.76	18.26	19.76	21.26	22.76	24.26	25.76	27.76	30.26	32.76	35.26	37.76	42.76	47.76	55.26	62.76	77.76
15.76	17.26	18.76	20.26	21.76	23.26	24.76	26.26	28.26	30.76	33.26	35.76	38.26	43.26	48.26	55.76	63.26	78.26
16.26	17.76	19.26	20.76	22.26	23.76	25.26	26.76	28.76	31.26	33.76	36.26	38.76	43.76	48.76	56.26	63.76	78.76
16.76	18.26	19.76	21.26	22.76	24.26	25.76	27.26	29.26	31.76	34.26	36.76	39.26	44.26	49.26	56.76	64.26	79.26
17.26	18.75	20.36	21.76	23.26	24.76	26.26	27.76	29.76	32.26	34.76	37.26	39.76	44.76	49.76	57.26	64.76	79.76
17.76	19.26	20.76	22.26	23.76	25.26	26.76	28.26	30.26	32.76	35.26	37.76	40.26	45.26	50.26	57.76	62.26	80.26
18.26	19.76	21.26	22.76	24.26	25.76	27.26	28.76	30.76	33.26	35.76	38.26	40.76	45.76	50.76	58.26	65.76	80.76
15.01	16.51	18.01	19.51	21.01	22.51	24.01	25.51	27.51	30.01	32.51	35.01	37.51	42.51	47.51	55.01	62.51	77.51
18.76	20.26	21.76	23.36	24.76	26.26	27.76	29.26	31.26	33.76	36.26	38.76	41.26	46.26	51.26	58.76	66.26	81.26
15.51	17.01	18.51	20.01	21.51	23.01	24.51	26.01	28.01	30.51	33.01	35.51	38.01	43.01	48.01	55.51	63.01	78.01
16.01	17.51	19.01	20.51	22.01	23.51	25.01	26.51	28.51	31.01	33.51	36.01	38.51	43.51	48.51	56.01	63.51	78.51
16.51	18.01	19.51	21.01	22.51	24.01	25.51	27.01	29.01	31.51	34.01	36.51	39.01	44.01	49.01	56.51	64.01	79.01
11.49	12.99	14.49	16.00	17.50	19.00	20.50	22.00	24.00	26.51	29.00	31.50	34.00	39.01	44.00	51.51	59.01	74.01
17.01	18.51	20.01	21.51	23.01	24.51	26.01	27.51	29.51	32.01	34.51	37.01	39.51	44.51	49.51	57.01	64.51	79.51
17.51	19.01	20.51	22.01	23.51	25.01	26.51	28.01	30.01	32.51	35.01	37.50	40.01	45.01	50.01	57.51	65.01	80.01
15.24	16.75	18.25	19.76	21.25	22.76	24.26	25.76	27.76	30.25	32.76	36.26	37.76	42.76	47.76	55.26	62.76	77.76
8.95	10.46	11.97	13.47	14.98	16.48	17.98	19.48	21.49	23.99	26.49	28.99	31.50	36.50	41.50	49.00	56.50	71.50♥
13.49	15.00	16.50	18.00	19.50	21.00	22.50	24.00	26.00	28.50	31.00	33.50	36.01	41.00	46.01	53.51	61.01	76.01
15.75	17.25	18.80	20.25	21.76	23.26	24.76	26.25	28.26	30.76	33.26	35.75	38.26	43.26	48.26	55.76	63.26	78.26
18.01	19.51	21.01	22.51	24.01	25.51	27.01	28.51	30.51	33.01	35.51	38.01	40.51	45.51	50.51	58.01	65.51	80.51
16.25	17.75	19.25	20.76	22.26	23.76	25.26	26.76	28.76	31.26	33.76	36.26	38.76	43.76	48.76	56.26	63.76	78.76
18.51	20.01	21.51	23.01	24.51	26.01	27.51	29.01	31.01	33.51	36.01	38.51	41.01	46.01	51.01	58.51	66.01	81.01
16.75	18.25	19.76	21.26	22.76	24.26	25.76	27.26	29.26	31.29	34.26	36.76	39.25	44.26	49.26	56.76	64.26	79.26
13.74	15.24	16.74	18.24	19.74	21.25	22.75	24.25	26.25	28.75	31.25	33.75	36.25	41.25	46.25	53.75	61.26	76.26
15.50	17.00	18.50	20.00	21.50	23.00	24.50	26.00	28.00	30.50	33.00	35.51	38.01	43.00	48.01	55.51	63.01	78.01
17.25	18.80	20.26	21.76	23.26	24.76	26.25	27.76	29.76	32.25	34.76	37.26	39.76	44.76	49.76	57.26	64.76	79.76
16.00	17.50	19.00	20.50	22.00	23.50	25.00	26.50	28.50	31.00	33.51	36.01	38.50	43.51	48.51	56.01	63.51	78.52
17.76	19.26	20.76	22.26	23.76	25.26	26.76	28.26	30.26	32.76	35.26	37.76	40.26	45.26	50.26	57.76	65.26	80.26
16.50	18.00	19.50	21.00	22.50	24.00	25.50	27.00	29.01	31.50	34.01	36.50	39.01	44.00	49.01	56.51	64.01	79.01
13.98	15.48	16.98	18.48	19.99	21.49	22.99	24.49	26.49	29.00	31.50	34.00	36.50	41.50	46.50	54.00	61.50	76.50
18.26	19.76	21.26	22.76	24.26	25.76	27.26	28.75	30.76	33.26	35.76	38.26	40.77	45.76	50.76	58.26	65.76	80.76
17.00	18.50	20.00	21.50	23.00	24.50	26.01	27.50	29.51	32.01	34.51	37.01	39.51	44.51	49.51	57.01	64.51	79.51
15.74	17.24	18.74	20.24	21.75	23.18	24.75	26.25	28.25	30.75	33.25	35.75	38.25	43.25	48.25	55.76	63.25	78.26

H Belt Width Table

Belt Width Factor	.42	.57	.71	.86	1.00	1.29	1.56	1.84	2.14	2.72	3.36	4.06	4.76	6.15	7.50	8.89	10.32
Belt Width	1/2	5/8	3/4	7/8	1	1-1/4	1-1/2	1-3/4	2	2-1/2	3	3-1/2	4	5	6	7	8
Belt Width Code	050	062	075	087	100	125	150	175	200	250	300	350	400	500	600	700	800

Shaded area indicates stock belt widths.

V-Drives
FHP Drives
Drive Component Accessories
DYNA-SYNC
HT200/HTD Synchronous Drives
HT500 Synchronous Drives
Roller Chain Sprockets

SELECTION

H Stock Drive Selections

Driven Speeds for Motor Speeds of			Speed Ratio	Pulley Combination				HP for a 1 Wide Belt for Motor Speeds of Δ			Nominal C.D. Using DYNA-SYNC Belts						
				Driver		Driven											
3500	1750	1160		No. of Teeth	Pitch Diam.	No. of Teeth	Pitch Diam.	3500	1750	1160	240H	270H	300H	330H	360H	390H	420H
....	1167	773	1.50	48H	7.639	72H	11.459	....	13.84	9.55	....	....	....	....	....	....	....
2333	1167	773	1.50	40H	6.366	60H	9.549	20.08	11.79	8.03	....	....	....	....	....	....	8.35
2333	1167	773	1.50	32H	5.093	48H	7.639	17.40	9.60	6.48	....	....	....	....	7.90	9.42	10.93
2333	1167	773	1.50	20H	3.183	30H	4.775	11.77◊	6.11	4.08	5.70	7.21	8.72	10.23	11.73	13.24	14.74
....	1167	773	1.50	16H	2.546	24H	3.820	....	4.91◊	3.27◊	6.98	8.48	9.99	11.49	12.99	14.50	16.00
2275	1138	754	1.54	26H	4.138	40H	6.366	14.80	7.88	5.28	....	....	6.66	8.18	9.69	11.20	12.71
2250	1125	746	1.56	18H	2.865	28H	4.456	10.71◊	5.52◊	3.68	6.21	7.72	9.22	10.73	12.23	13.74	15.24
....	....	738	1.57	14H	2.228	22H	3.501	....	....	2.86◊	7.48	8.99	10.49	11.99	13.50	15.00	16.50
2188	1094	725	1.60	30H	4.775	48H	7.639	16.59	9.03	6.08	....	....	....	6.60	8.13	9.65	11.17
2188	1094	725	1.60	20H	3.183	32H	5.093	11.77◊	6.11	4.08	5.42	6.94	8.45	9.96	11.47	12.97	14.48
....	1077	714	1.63	16H	2.546	26H	4.138	....	4.91◊	3.27◊	6.71	8.22	9.73	11.23	12.73	14.24	15.74
2100	1050	696	1.67	24H	3.820	40H	6.366	13.82	7.30	4.89	....	....	6.89	8.41	9.93	11.44	12.95
2100	1050	696	1.67	18H	2.865	30H	4.775	10.71◊	5.52◊	3.68	5.93	7.45	8.96	10.46	11.97	13.48	14.98
2042	1021	677	1.71	28H	4.456	48H	7.639	15.74	8.46	5.68	....	....	....	6.82	8.35	9.88	11.40
....	....	677	1.71	14H	2.228	24H	3.820	....	....	2.86◊	7.22	8.72	10.23	11.74	13.24	14.74	16.24
....	1000	663	1.75	48H	7.639	84H	13.369	....	13.84	9.55	....	....	....	....	....	....	....
....	1000	663	1.75	16H	2.546	28H	4.456	....	4.91◊	3.27◊	6.44	7.95	9.46	10.97	12.47	13.98	15.48
1969	985	652	1.78	18H	2.865	32H	5.093	10.71◊	5.52◊	3.68	5.65	7.17	8.69	10.20	11.71	13.21	14.72
1944	972	644	1.80	40H	6.366	72H	11.459	20.08	11.79	8.03	....	....	....	....	....	....	....
1925	963	638	1.82	22H	3.501	40H	6.366	12.84	6.71	4.48	....	5.57	7.11	8.64	10.16	11.67	13.18
1896	948	628	1.85	26H	4.138	48H	7.639	14.80	7.88	5.28	....	....	....	7.04	8.58	10.11	11.63
....	....	625	1.86	14H	2.226	26H	4.138	....	....	2.86◊	6.94	8.45	9.96	11.47	12.97	14.48	15.98
1867	933	619	1.88	32H	5.093	60H	9.549	17.40	9.60	6.48	....	....	....	....	....	7.68	9.24
....	933	619	1.88	16H	2.546	30H	4.775	....	4.91◊	3.27◊	6.16	7.68	9.19	10.70	12.21	13.71	15.22
....	875	580	2.00	48H	7.639	96H	15.279	....	13.84	9.55	....	....	....	....	....	....	....
1750	875	580	2.00	30H	4.775	60H	9.549	16.59	9.03	6.08	....	....	....	....	....	7.89	9.45
1750	875	580	2.00	24H	3.820	48H	7.639	13.82	7.30	4.89	....	....	....	7.25	8.80	10.33	11.85
1750	875	580	2.00	20H	3.183	40H	6.366	11.77◊	6.11	4.08	....	5.78	7.33	8.86	10.39	11.90	13.41
....	875	580	2.00	16H	2.546	32H	5.093	....	4.91◊	3.27◊	5.87	7.40	8.92	10.43	11.94	13.45	14.96
....	....	580	2.00	14H	2.228	28H	4.456	....	....	2.66◊	6.67	8.18	9.69	11.20	12.71	14.22	15.72
1667	833	552	2.10	40H	6.366	84H	13.369	20.08	11.79	8.03	....	....	....	....	....	....	....
1633	817	541	2.14	28H	4.456	60H	9.549	15.74	8.46	5.68	....	....	....	....	....	8.10	9.67
....	....	541	2.14	14H	2.228	30H	4.775	....	....	2.86◊	6.38	7.90	9.42	10.94	12.44	13.95	15.46
1604	802	532	2.18	22H	3.501	48H	7.639	12.84	6.71	4.48	....	....	....	7.47	9.02	10.55	12.08
1575	788	522	2.22	18H	2.865	40H	6.366	10.71◊	5.52◊	3.68	....	6.00	7.55	9.09	10.61	12.13	13.65
1556	778	516	2.25	32H	5.093	72H	11.459	17.40	9.60	6.48	....	....	....	....	....	....	....
....	....	507	2.29	14H	2.228	32H	5.093	....	....	2.86◊	6.09	7.62	9.15	10.66	12.18	13.68	15.19
1517	758	503	2.31	26H	4.138	60H	9.549	14.80	7.88	5.28	....	....	....	....	....	8.31	9.88
1458	729	483	2.40	40H	6.366	96H	15.279	20.08	11.79	8.03	....	....	....	....	....	....	....
1458	729	483	2.40	30H	4.775	72H	11.459	16.59	9.03	6.08	....	....	....	....	....	....	....
1458	729	483	2.40	20H	3.183	48H	7.639	11.77◊	6.11	4.08	....	....	6.09	7.68	9.24	10.78	12.31
....	700	464	2.50	48H	7.639	120H	19.099	....	13.84	9.55	....	....	....	....	....	....	....
1400	700	464	2.50	24H	3.820	60H	9.549	13.82	7.30	4.89	....	....	....	....	....	8.52	10.10
....	700	464	2.50	16H	2.546	40H	6.366	....	4.91◊	3.27◊	....	6.21	7.77	9.31	10.84	12.36	13.88
1361	681	451	2.57	28H	4.456	72H	11.459	15.74	8.46	5.68	....	....	....	....	....	....	....
1333	667	442	2.63	32H	5.093	84H	13.369	17.40	9.60	6.48	....	....	....	....	....	....	....

Δ HP ratings are for conventional speed-reduction drives.
For Speed-Up Drives refer to page PT10-17.

◊ Pulley Diameter is below recommended minimum. A reduction in belt life should be expected. Suggest alternate drive selection, whenever possible.

♥ Flanges Required on both pulleys.

H Stock Drive Selections

Nominal Center Distance Using DYNA-SYNC Belts

450H	480H	510H	540H	570H	600H	630H	660H	700H	750H	800H	850H	900H	1000H	1100H	1250H	1400H	1700H
....	....	10.33	11.85	13.37	14.88	16.40	17.91	19.92	22.43	24.94	27.44	29.95	34.96	39.96	47.47	54.98	69.99♥
9.88	11.40	12.91	14.42	15.93	17.44	18.94	20.45	22.45	24.96	27.46	29.97	32.47	37.48	42.48	49.98	57.49♥	72.49♥
12.44	13.95	15.46	16.97	18.47	19.97	21.47	22.97	24.98	27.48	29.98	32.49	34.99	39.99	44.99	52.50	60.00	74.99
16.24	17.74	19.24	20.75	22.25	23.75	25.25	26.75	28.75	31.25	33.75	36.25	38.75	43.76	48.76	56.27	63.75	78.76
17.50	19.00	20.50	22.00	23.50	25.00	26.50	28.00	30.01	32.51	35.01	37.50	40.01	45.02	50.01	57.51	65.01	80.01
14.21	15.72	17.22	18.73	20.23	21.73	23.23	24.74	26.74	29.24	31.74	34.24	36.75	41.75	46.75	54.25	61.75	76.75
16.74	18.24	19.75	21.25	22.75	24.25	25.75	27.25	29.25	31.75	34.25	36.49	39.25	44.26	49.25	56.75	64.26	79.26
18.00	19.50	21.00	22.50	24.00	25.50	27.01	28.50	30.51	33.01	35.51	38.01	40.51	45.51	50.50	58.02	65.51	80.51
12.68	14.19	15.69	17.20	18.70	20.21	21.71	23.22	25.22	27.72	30.23	32.13	35.23	40.24	45.24	52.74	60.25	75.25
15.98	17.48	18.99	20.49	21.99	23.49	24.99	26.49	28.50	31.00	33.50	36.00	38.50	43.50	48.50	56.00	63.52	78.51
17.24	18.74	20.25	21.75	23.18	24.75	26.25	27.75	29.75	32.25	34.75	37.25	39.76	44.76	49.76	57.25	64.76	79.77
14.45	15.96	17.46	18.97	20.47	21.97	23.48	24.98	26.98	29.48	31.99	34.49	36.99	41.99	47.00	54.50	62.00	77.01
16.48	17.96	19.49	20.99	22.49	23.99	25.49	26.99	29.00	31.50	34.00	36.50	39.00	44.00	49.00	56.51	64.01	79.01
12.91	14.42	15.93	17.44	18.94	20.45	21.95	23.46	25.46	27.97	30.47	32.97	35.48	40.48	45.48	52.99	60.49	75.49
17.74	19.24	20.75	22.25	23.75	25.25	26.75	28.25	30.25	32.75	35.25	37.75	40.25	45.26	50.27	57.76	65.25	80.26
....	....	....	....	11.65	13.19	14.73	16.25	18.28	20.81	23.33	25.85	28.34	33.39	38.40	45.92	53.43	68.45♥
16.98	18.49	19.99	21.49	22.99	24.49	26.00	27.49	29.50	32.00	34.50	37.00	39.50	44.50	49.50	57.01	64.50	79.51
16.22	17.73	19.23	20.73	22.23	23.73	25.24	26.74	28.74	31.24	33.74	36.24	38.75	43.75	48.75	56.25	63.75	78.77
....	9.67	11.22	12.75	14.28	25.81	17.32	18.84	20.85	23.37	25.88	28.40	30.90	35.92	40.93	48.44	55.95♥	70.97♥
14.69	16.20	17.70	19.21	20.71	22.21	23.72	25.22	27.22	29.73	32.23	34.73	37.23	42.24	47.24	54.74	62.25	77.25
13.14	14.65	16.16	17.67	19.18	20.68	22.19	23.69	25.70	28.21	30.71	33.21	35.72	40.72	45.73	53.24	60.74	75.74
17.49	18.99	20.49	21.99	23.49	24.99	26.49	27.99	30.00	32.50	35.00	37.50	40.00	45.00	50.00	57.50	65.00	80.01
10.78	12.31	13.83	15.35	16.86	18.37	19.88	21.39	23.40	25.91	28.42	30.93	33.44	38.45	43.45♥	50.96♥♥	58.47♥	73.48♥
16.72	18.23	19.73	21.23	22.73	24.24	25.74	27.24	29.24	31.74	34.24	36.75	39.25	44.25	49.25	56.15	64.14	79.25
....	....	....	....	....	....	12.94	14.50	16.56	19.12	21.67	24.21	26.74	31.78	36.81	44.35	51.87	66.90
11.00	12.53	14.06	15.58	17.09	18.61	20.35	21.63	23.64	26.15	28.66	31.17	33.68	38.69♥	43.70♥	51.21♥	58.71♥	73.73♥
13.37	14.89	16.40	17.91	19.42	20.92	22.43	23.93	25.94	28.45	30.95	33.46	35.96	40.97	45.97	53.48	60.98	75.99
14.92	16.43	17.94	19.45	20.95	22.45	23.96	25.46	27.47	29.97	32.47	34.97	37.48	42.48	47.48	54.99	62.49	77.50
16.46	17.97	19.47	20.87	22.48	23.98	25.48	26.98	28.99	31.48	33.99	36.49	38.99	43.99	49.00	56.50	64.00	79.01
17.22	18.73	20.23	21.73	23.23	24.74	26.24	27.74	29.74	32.24	34.74	37.25	39.75	44.75	49.75	57.25	64.75	79.75
....	....	....	10.94	12.51	14.07	15.61	17.15	19.19	21.73	24.26	26.78	29.30	34.33	39.35	46.88	54.40♥	69.42♥
11.21	12.75	14.28	15.80	17.32	16.64	20.35	21.86	23.87	26.39	28.90	31.41	33.91	38.93♥	43.94♥	51.45♥	58.95♥	73.97♥
16.96	18.47	19.97	21.47	22.98	24.46	25.98	27.48	29.48	31.99	34.49	36.99	39.49	44.49	49.50	57.01	64.50	79.50
13.60	15.12	16.66	18.14	19.65	21.16	22.67	24.17	26.18	28.69	31.19	33.70	36.20	41.21	46.22	53.72	61.23	76.24
15.16	16.67	18.18	19.68	21.19	22.69	24.20	25.70	27.71	30.21	32.71	35.22	37.72	42.73	47.73	55.23	62.74	77.74
8.93	10.52	12.08	13.63	15.17	16.70	18.23	19.75	21.78	24.30	26.82	29.34	31.85	36.87	41.89♥	49.41♥	56.92♥	71.94♥
16.70	18.20	19.70	21.21	22.72	24.22	25.72	27.22	29.23	31.73	34.23	36.73	39.24	44.24	49.24	56.75	64.25	79.25
11.44	12.97	14.51	16.03	17.55	19.07	20.58	22.09	24.11	26.62	29.13	31.64	34.15♥	39.17♥	44.18♥	51.69♥	59.20♥	74.21♥
....	....	....	....	....	12.18	13.78	15.35	17.43	20.01	22.57	25.11	27.65	32.71	37.75	45.29	52.82♥	67.87♥
9.14	10.76	12.30	13.85	15.39	16.93	18.45	19.98	22.01	24.53	27.05	29.57	32.09	37.11	42.13♥	49.65♥	57.16♥	72.19♥
13.83	15.35	16.86	18.37	19.89	21.39	22.90	24.41	26.42	28.92	31.43	33.94	36.44	41.45	46.46	53.97	61.47	76.48
....	....	....	....	....	....	....	....	....	15.43	18.09	20.71	23.30	28.43	33.52	41.11	48.67	63.75♥
11.65	13.20	14.73	16.25	17.77	19.30	20.81	22.33	24.34	26.86	29.37	31.88♥	34.39♥	39.41♥	44.42♥	51.93♥	59.44♥	74.46♥
15.39	16.90	18.41	19.92	21.43	22.93	24.44	25.94	27.95	30.45	32.96	35.46	37.97	42.97	47.97	55.48	62.98	77.99
9.34	10.94	12.51	14.07	15.61	17.15	18.68	20.20	22.23	24.76	27.28	29.80	32.32	37.35♥	42.37♥	49.89♥	57.40♥	72.43♥
....	....	10.15	11.77	13.36	14.93	16.49	18.03	20.08	22.63	25.17	27.70	30.23	35.22	40.30	47.83♥	55.36♥	70.39♥

H Belt Width Table

Belt Width Factor	.42	.57	.71	.86	1.00	1.29	1.56	1.84	2.14	2.72	3.36	4.06	4.76	6.15	7.50	8.89	10.32
Belt Width	1/2	5/8	3/4	7/8	1	1-1/4	1-1/2	1-3/4	2	2-1/2	3	3-1/2	4	5	6	7	8
Belt Width Code	050	062	075	087	100	125	150	175	200	250	300	350	400	500	600	700	800

Shaded area indicates stock belt widths.

V-Drives
FHP Drives
Drive Component Accessories
DYNA-SYNC
HT200/HTD Synchronous Drives
HT500 Synchronous Drives
Roller Chain Sprockets

SELECTION

H Stock Drive Selections

Driven Speeds for Motor Speeds of			Speed Ratio	Pulley Combination				HP for a 1 Wide Belt for Motor Speeds of Δ			Nominal C.D. Using DYNA-SYNC Belts						
				Driver		Driven											
3500	1750	1160		No. of Teeth	Pitch Diam.	No. of Teeth	Pitch Diam.	3500	1750	1160	240H	270H	300H	330H	360H	390H	420H
1312	656	435	2.67	18H	2.865	48H	7.639	10.71◊	5.52◊	3.68	....	....	6.30	7.89	9.45	11.00	12.53
1283	642	425	2.73	22H	3.501	60H	9.549	12.84	6.71	4.48	....	....	....	....	7.10	8.73	10.31
1264	632	419	2.77	26H	4.138	72H	11.459	14.80	7.88	5.28	....	....	....	....	....	....	....
1250	625	414	2.80	30H	4.775	84H	13.369	16.59	9.03	6.08	....	....	....	....	....	....	....
....	....	406	2.86	14H	2.228	40H	6.366	....	....	2.86◊	4.80†	6.42†	7.99†	9.53	11.06	12.59	14.11
1167	583	387	3.00	40H	6.366	120H	19.099	20.08	11.79	8.03	....	....	....	....	....	....	....
1167	583	387	3.00	32H	5.093	96H	15.279	17.40	9.60	6.48	....	....	....	....	....	....	....
1167	583	387	3.00	28H	4.456	84H	13.369	15.74	8.46	5.68	....	....	....	....	....	....	....
1167	583	387	3.00	24H	3.820	72H	11.459	13.82	7.30	4.89	....	....	....	....	....	....	8.08
1167	583	387	3.00	20H	3.183	60H	9.549	11.77◊	6.11	4.08	....	....	....	....	7.30	8.93	10.52
....	583	387	3.00	16H	2.546	48H	7.639	....	4.91◊	3.27◊	....	....	6.50	8.10	9.67	11.22	12.75
1094	547	363	3.20	30H	4.775	96H	15.279	16.59	9.03	6.08	....	....	....	....	....	....	....
1084	542	359	3.23	26H	4.138	84H	13.369	14.80	7.88	5.28	....	....	....	....	....	....	....
1069	535	354	3.27	22H	3.501	72H	11.459	12.84	6.71	4.48	....	....	....	....	....	....	8.28
1050	525	348	3.33	18H	2.865	60H	9.549	10.71◊	5.52◊	3.68	....	....	....	....	7.50	9.14	10.77
1021	510	338	3.43	28H	4.456	96H	15.279	15.74	8.46	5.68	....	....	....	....	....	....	....
....	....	338	3.43	14H	2.228	48H	7.639	....	....	2.86◊	....	....	6.70†	8.95†	9.88†	11.44†	12.98
1000	500	331	3.50	24H	3.820	84H	13.369	13.82	7.30	4.89	....	....	....	....	....	....	....
972	486	322	3.60	20H	3.183	72H	11.459	11.77◊	6.11	4.08	....	....	....	....	....	....	8.47
948	474	314	3.69	26H	4.138	96H	15.279	14.80	7.88	5.28	....	....	....	....	....	....	....
933	467	309	3.75	32H	5.093	120H	19.099	17.40	9.60	6.48	....	....	....	....	....	....	....
....	467	309	3.75	16H	2.546	60H	9.549	....	4.91◊	3.27◊	....	....	....	....	7.69†	9.34†	10.94
916	458	304	3.82	22H	3.501	84H	13.369	12.84	6.71	4.48	....	....	....	....	....	....	....
875	438	290	4.00	30H	4.775	120H	19.099	16.59	9.03	6.08	....	....	....	....	....	....	....
875	438	290	4.00	24H	3.820	96H	15.279	13.82	7.30	4.89	....	....	....	....	....	....	....
875	438	290	4.00	18H	2.865	72H	11.459	10.71◊	5.52◊	3.68	....	....	....	....	....	....	8.67
833	417	276	4.20	20H	3.183	84H	13.369	11.77◊	6.11	4.08	....	....	....	....	....	....	....
817	408	271	4.29	28H	4.456	120H	19.099	15.74	8.46	5.68	....	....	....	....	....	....	....
....	....	271	4.29	14H	2.228	60H	9.549	....	....	2.86◊	....	....	....	6.12‡	7.89‡	9.55†	11.15†
802	401	266	4.36	22H	3.501	96H	15.279	12.84	6.71	4.48	....	....	....	....	....	....	....
....	389	258	4.50	16H	2.546	72H	11.459	....	4.91◊	3.27◊	....	....	....	....	....	....	8.86†
758	379	251	4.62	26H	4.138	120H	19.099	14.80	7.88	5.28	....	....	....	....	....	....	....
749	375	248	4.67	18H	2.865	84H	13.369	10.71◊	5.52	3.68	....	....	....	....	....	....	....
729	365	242	4.80	20H	3.183	96H	15.279	11.77◊	6.11	4.08	....	....	....	....	....	....	....
700	350	232	5.00	24H	3.820	120H	19.099	13.82	7.30	4.89	....	....	....	....	....	....	....
....	....	226	5.14	14H	2.228	72H	11.459	....	....	2.86◊	....	....	....	....	....	7.22§	9.05‡
....	333	221	5.25	16H	2.546	84H	13.369	....	4.91◊	3.27◊	....	....	....	....	....	....	....
656	323	217	5.33	18H	2.865	96H	15.279	10.71◊	5.52◊	3.68	....	....	....	....	....	....	....
642	321	213	5.45	22H	3.501	120H	19.099	12.84	6.71	4.48	....	....	....	....	....	....	....
583	294	193	6.00	20H	3.183	120H	19.099	11.77◊	6.11	4.08	....	....	....	....	....	....	....
....	292	193	6.00	16H	2.546	96H	15.219	....	4.91◊	3.27◊	....	....	....	....	....	....	....
....	....	193	6.00	14H	2.228	84H	13.369	....	....	2.86◊	....	....	....	....	....	....	....
525	262	174	6.67	18H	2.865	120H	19.099	10.71◊	5.52◊	3.68◊	....	....	....	....	....	....	....
....	....	169	6.86	14H	2.228	96H	15.279	....	....	3.27◊	....	....	....	....	....	....	....
....	233	155	7.50	16H	2.546	120H	19.099	....	4.91◊	2.86◊	....	....	....	....	....	....	....
....	....	135	8.57	14H	2.228	120H	19.099	....	....	....	....	....	....	....	....	....	....

Δ HP ratings are for conventional speed-reduction drives. For Speed-Up Drives refer to page PT10-17.

◊ Pulley Diameter is below recommended minimum. A reduction in belt life should be expected. Suggest alternate drive selection, whenever possible.

† ‡ § See Teeth in Mesh table on opposite page.

♥ Flanges Required on both pulleys.

H Stock Drive Selections

Nominal Center Distance Using DYNA-SYNC Belts

450H	480H	510H	540H	570H	600H	630H	660H	700H	750H	800H	850H	900H	1000H	1100H	1250H	1400H	1700H
14.06	15.58	17.09	18.61	20.35	21.63	23.14	24.64	26.65	29.16	31.67	34.18	36.68	41.69	46.70	54.21	61.71	76.73
11.87	13.42	14.95	16.48	18.00	19.52	21.04	22.56	24.58	27.09	29.61♥	32.12♥	34.63♥	39.65♥	44.66♥	52.17♥	56.69♥	74.70♥
9.55	11.15	12.73	14.29	15.83	17.37	18.90	20.43	22.46	24.99	27.52	30.04	32.55	37.58♥	42.60♥	50.13♥	57.64♥	72.67♥
....	....	10.35	11.98	13.57	15.14	16.70	18.25	20.30	22.85	25.39	27.95	30.46	35.50	40.53♥	48.07♥	55.59♥	70.63♥
15.62	17.13	18.65	20.15	21.66	23.17	23.67	26.18	28.19	30.69	33.20	35.70	38.21	43.21	48.22	55.72	63.23	78.24
....	....	....	....	....	....	....	....	13.47	16.24	18.92	21.56	24.16	29.31	34.42	42.03	49.60	64.70♥
....	....	....	....	11.34	12.99	14.81	16.20	18.29	20.88	23.45	26.01	28.55	33.62	38.67	46.23♥	53.77♥	68.62♥
....	....	10.55	12.18	13.78	15.36	16.92	18.47	20.52	23.08	25.62	28.16	30.69	35.73♥	40.77♥	48.31♥	55.83♥	70.87♥
9.75	11.36	12.94	14.50	16.05	17.59	19.13	20.65	22.69	26.22	27.75	30.27	32.79♥	37.82♥	42.84♥	50.37♥	57.88♥	72.91♥
12.09	13.63	15.17	16.70	18.23	19.75	21.27	22.79	24.81	27.32♥	29.84♥	32.35♥	38.87♥	39.88♥	44.90♥	52.42♥	59.93♥	94.95♥
14.28	15.80	17.32	18.84	20.35	21.86	23.37	24.88	26.89	29.40	31.91	34.42	36.92	41.93	46.94	54.45	81.96	76.97
....	....	....	....	11.54	13.20	14.81	16.41	18.51	21.10	23.67	26.23	28.79	33.85	38.90♥	46.46♥	54.00♥	69.06♥
....	9.05	10.75	12.39	13.99	15.57	17.13	18.68	20.74	23.30	25.85	28.38	30.91	35.96♥	41.00♥	48.54♥	56.07♥	71.11♥
9.95	11.56	13.15	14.72	16.27	17.81	19.35	20.88	22.91	25.45	27.98	30.50♥	33.02♥	38.05♥	43.08♥	50.61♥	58.12♥	73.15♥
12.30	13.85	15.39	16.93	18.46	19.98	21.50	23.02♥	25.04♥	27.56♥	30.07♥	32.59♥	35.10♥	40.12♥	45.14♥	52.66♥	60.17♥	75.19♥
....	....	....	....	11.73	13.40	15.02	16.62	18.72	21.32	23.89	26.45	29.00	34.08	39.13♥	46.70♥	54.24♥	69.30♥
14.51	16.03	17.55	19.07	20.58	22.09	23.61	25.11	27.13	29.64	32.15	34.68	37.16	42.17	47.18	54.70	62.20	77.22♥
....	9.24	10.95	12.59	14.20	15.78	17.35	18.90	20.96	23.52	26.07	28.61	31.14♥	36.20♥	41.23♥	48.78♥	56.35♥	71.35♥
10.15	11.77	13.36	14.93	16.49	18.03	19.57	21.10	23.14	25.68♥	28.21♥	30.73♥	33.25♥	38.29♥	43.31♥	50.84♥	58.36♥	73.40♥
....	....	....	10.19	11.93	13.60	15.23	16.83	18.93	21.53	24.11	26.67	29.23	34.31♥	39.36♥	46.93♥	54.48♥	69.54♥
....	....	....	....	....	....	....	....	14.25	17.05	19.75	22.40	25.02	30.19	35.31	42.94♥	50.52♥	65.64♥
12.51	14.07	15.61	17.15	18.86	21.20	21.73♥	23.26♥	25.27♥	27.79♥	30.31♥	32.82♥	35.34♥	40.36♥	45.38♥	52.90♥	60.41♥	75.43♥
....	9.43	11.14	12.79	14.40	15.99	17.56	19.12	21.18	23.74	26.30	28.84♥	31.37♥	36.43♥	41.47♥	49.01♥	56.54♥	71.59♥
....	....	....	....	....	....	....	....	14.44	17.25	19.96	22.61	25.23	30.41	35.53	43.16♥	50.75♥	65.87♥
....	....	....	10.38	12.12	13.80	15.43	17.03	19.14	21.75	24.33	27.00	29.45	34.53♥	39.59♥	47.16♥	54.71♥	69.78♥
10.35	11.98	13.57	15.14	16.70	18.25	19.79	21.32	23.36♥	25.90♥	28.44♥	30.96♥	33.48♥	38.52♥	43.55♥	51.08♥	58.60♥	73.64♥
....	9.62	11.34	12.99	14.61	16.20	17.77	19.33	21.40	23.97	26.52♥	29.06♥	31.60♥	36.66♥	41.70♥	49.25♥	56.78♥	71.83♥
....	....	....	....	....	....	....	....	14.63	17.45	20.16	22.82	25.45	30.63	35.76♥	43.39♥	50.98♥	66.11♥
12.73†	14.29†	15.83†	17.37	21.95♥	18.90♥	20.43♥	23.47♥	25.50♥	28.02♥	30.54♥	33.06♥	35.57♥	40.60♥	45.61♥	53.14♥	60.65♥	75.67♥
....	....	....	10.57	12.32	14.00	15.63	17.24	19.36	21.96	24.55	27.12	29.67♥	34.76♥	39.82♥	47.39♥	54.94♥	70.01♥
10.55†	12.1†	13.78	15.36	16.92	18.47	20.01	21.55♥	23.59♥	26.13♥	28.66♥	31.19♥	33.72♥	38.75♥	43.78♥	51.32♥	58.84♥	73.88♥
....	....	....	....	....	....	....	12.43	14.82	17.65	20.37	23.03	25.66	30.85	35.98♥	43.62♥	51.21♥	66.34♥
....	9.81†	11.54	13.20	14.82	15.41	17.99	19.55	21.62	24.19♥	26.74♥	29.29♥	31.83♥	36.89♥	41.93♥	49.48♥	57.02♥	72.07♥
....	....	....	10.75	12.51	14.20	15.84	17.45	19.57	22.18	24.77	27.34♥	29.90♥	34.99♥	40.05♥	47.63♥	55.18♥	70.25♥
....	....	....	....	....	....	....	....	15.02	17.84	20.57	23.24	25.87	31.06♥	36.20♥	43.84♥	51.44♥	66.57♥
10.75†	12.39†	13.99†	15.57†	17.13†	18.69†♥	20.23†♥	21.77♥	23.81♥	26.35♥	28.89♥	31.42♥	33.95♥	38.99♥	44.02♥	51.55♥	59.08♥	74.12♥
....	10.00†	11.73†	13.40	15.02	16.62	18.20	19.76	21.84♥	24.39♥	26.96♥	29.51♥	32.08♥	37.12♥	42.16♥	49.72♥	57.25♥	72.31♥
....	....	....	10.94†	12.71†	14.40	16.04	17.65	19.78	22.39	24.98♥	27.56♥	30.12♥	35.21♥	40.28♥	47.86♥	55.41♥	70.49♥
....	....	....	....	....	....	....	12.79	15.21	18.04	20.78	23.45	26.08	31.28♥	36.42♥	44.07♥	51.6♥	66.81♥
....	....	....	....	....	....	....	12.98†	15.40	18.24	20.98	23.66	26.29♥	31.50♥	36.64♥	44.29♥	51.90♥	67.04♥
....	....	9.20§	11.13‡	12.90	14.59†	16.24†	17.86	19.99	22.61♥	25.20♥	27.78♥	30.34♥	35.44♥	40.51♥	48.09♥	55.65♥	70.73♥
8.30§	10.19‡	11.93‡	13.60†	15.23†	16.83†	18.41†♥	19.98†	22.05†♥	24.63†♥	27.19♥	29.74♥	32.28♥	37.34♥	42.39♥	49.95♥	57.49♥	72.55♥
....	....	9.37§	11.31‡	13.09‡	....	....	13.16†	15.59†	18.44	21.18	23.86♥	26.51♥	31.71♥	36.86♥	44.52♥	52.13♥	67.27♥
....	....	....	....	....	14.79‡	16.44†	18.07†♥	20.19†♥	22.82†♥	25.42†♥	27.99†♥	30.56†♥	35.66♥	40.74♥	48.32♥	55.88♥	70.96♥
....	....	....	....	....	....	....	13.64‡	15.78†	18.64†	21.38†♥	24.07♥	26.72♥	31.93♥	37.08♥	44.74♥	52.35♥	67.50♥
....	....	....	....	....	....	11.49§	13.53§	15.97‡	18.83‡♥	21.59†♥	24.28†♥	26.93†♥	32.14†♥	37.30♥	44.97♥	52.58♥	67.74♥

H Belt Width Table

Belt Width Factor	.42	.57	.71	.86	1.00	1.29	1.56	1.84	2.14	2.72	3.36	4.06	4.76	6.15	7.50	8.89	10.32
Belt Width	1/2	5/8	3/4	7/8	1	1-1/4	1-1/2	1-3/4	2	2-1/2	3	3-1/2	4	5	6	7	8
Belt Width Code	050	062	075	087	100	125	150	175	200	250	300	350	400	500	600	700	800

Teeth in Mesh factor (T.I.M)

Table Symbol	No. of Teeth In Mesh In Small Pulley	Factor
None	6 or More	1
†	5	0.8

Shaded area indicates stock belt widths.

Table Symbol	No. of Teeth In Mesh In Small Pulley	Factor
‡	4	0.6
§	3	0.4

V-Drives
FHP Drives
Drive Component Accessories
DYNA-SYNC
HT200/HTD Synchronous Drives
HT500 Synchronous Drives
Roller Chain Sprockets

SELECTION

XH Stock Drive Selections

Driven Speeds for Motor Speeds of			Speed Ratio	Pulley Combination				HP for a 1 Wide Belt for Motor Speeds of Δ		
				Driver		Driven				
1750	1160	870		No. of Teeth	Pitch Diam.	No. of Teeth	Pitch Diam.	1750	1160	870
1750	1160	870	1.00	40XH	11.141	40XH	11.141	22.22	17.44	13.79
1750	1160	870	1.00	32XH	8.913	32XH	8.913	19.87	14.57	11.29
1750	1160	870	1.00	30XH	8.356	30XH	8.356	19.06	13.79	10.63
1750	1160	870	1.00	28XH	7.799	28XH	7.799	18.16	12.97	9.97
1750	1160	870	1.00	26XH	7.241	26XH	7.241	17.17	12.13	9.29
1750	1160	870	1.00	24XH	6.685	24XH	6.685	16.14◊	11.29	8.61
1750	1160	870	1.00	22XH	6.127	22XH	6.127	15.03◊	10.41◊	7.92
1750	1160	870	1.00	20XH	5.570	20XH	5.570	13.85◊	9.51◊	7.23◊
	1160	870	1.00	18XH	5.013	18XH	5.013	....	8.61	6.52◊
1641	1088	816	1.07	30XH	8.356	32XH	8.913	19.06	13.79	10.63
1633	1083	812	1.07	28XH	7.799	30XH	8.356	18.16	12.97	9.97
1625	1077	808	1.08	26XH	7.241	28XH	7.799	17.17	12.13	9.29
1615	1071	803	1.08	24XH	6.685	26XH	7.241	16.14◊	11.29	8.61
1604	1063	798	1.09	22XH	6.127	24XH	6.685	15.03◊	10.41◊	7.92
1591	1055	791	1.10	20XH	5.570	22XH	6.127	13.85◊	9.51◊	7.23◊
	1044	783	1.11	18XH	5.013	20XH	5.570	....	8.61◊	6.52◊
1531	1015	761	1.14	28XH	7.799	32XH	8.913	18.16	12.97	9.97
1517	1005	754	1.15	26XH	7.241	30XH	8.356	17.17	12.13	9.29
1500	994	746	1.17	24XH	6.685	28XH	7.799	16.14◊	11.29	8.61
1481	982	736	1.18	22XH	6.127	26XH	7.241	15.03◊	10.41◊	7.92
1458	967	725	1.20	40XH	11.141	48XH	13.369	22.22	17.44	13.79
1458	967	725	1.20	20XH	5.570	24XH	6.685	13.85	9.51◊	7.23◊
	949	712	1.22	18XH	5.013	22XH	6.127	....	8.61◊	6.52◊
1422	943	707	1.23	26XH	7.241	32XH	8.913	17.17	12.13	9.29
1400	928	696	1.25	32XH	8.913	40XH	11.141	19.87	14.57	11.29
1400	928	696	1.25	24XH	6.685	30XH	8.356	16.14◊	11.29	8.61
1375	911	684	1.27	22XH	6.127	28XH	7.799	15.03◊	10.41◊	7.92
1346	892	669	1.30	20XH	5.570	26XH	7.241	13.85◊	9.51◊	7.23◊
1313	870	653	1.33	30XH	8.356	40XH	11.141	19.06	13.79	10.63
1313	870	653	1.33	24XH	6.685	32XH	8.913	16.14◊	11.29	8.61
	870	653	1.33	18XH	5.013	24XH	6.685	....	8.61◊	6.52◊
1283	851	638	1.36	22XH	6.127	30XH	8.356	15.03◊	10.41◊	7.92
1250	829	621	1.40	20XH	5.570	28XH	7.799	13.85◊	9.51◊	7.23◊
1225	812	609	1.43	28XH	7.799	40XH	11.141	18.16	12.97	9.97
	803	602	1.44	18XH	5.013	26XH	7.241	....	8.61◊	6.52◊
1203	798	598	1.45	22XH	6.127	32XH	8.913	15.03◊	10.41◊	7.92
1167	773	580	1.50	40XH	11.141	60XH	16.711	22.22	17.44	13.79
1167	773	580	1.50	32XH	8.913	48XH	13.369	19.87	14.57	11.29
1167	773	580	1.50	20XH	5.570	30XH	8.356	13.85◊	9.51◊	7.23◊
1138	754	566	1.54	26XH	7.241	40XH	11.141	17.17	12.13	9.29
	746	559	1.56	18XH	5.013	28XH	7.799	....	8.61◊	6.52◊
1094	725	544	1.60	30XH	8.356	48XH	13.369	19.06	13.79	10.63◊
1094	725	544	1.60	20XH	5.570	32XH	8.913	13.85◊	9.51◊	7.23◊
1050	696	522	1.67	24XH	6.685	40XH	11.141	16.14◊	11.29	8.61
	696	522	1.67	18XH	5.013	30XH	8.356	....	8.61◊	6.52◊
1021	677	508	1.71	28XH	7.799	48XH	13.369	18.16	12.97	9.97
	653	489	1.78	18XH	5.013	32XH	8.913	....	8.61◊	6.52◊
972	644	483	1.80	40XH	11.141	72XH	20.054	22.22	17.44	13.79
963	638	479	1.82	22XH	6.127	40XH	11.141	15.03◊	10.41◊	7.92

Δ HP ratings are for conventional speed-reduction drives.
For Speed-Up Drives refer to page PT10-17.

◊ Pulley Diameter is below recommended minimum. A reduction in belt life should be expected. Suggest alternate drive selection, whenever possible.

♥ Flanges Required on both pulleys.

XH Stock Drive Selections

Nominal Center Distance Using DYNA-SYNC Belts

507XH	560XH	630XH	700XH	770XH	840XH	980XH	1120XH	1260XH	1400XH	1540XH	1750XH
....	....	14.00	17.50	21.00	24.50	31.50	38.50	45.50	52.50	59.50	70.00
11.37	14.00	17.50	21.00	24.50	28.00	35.00	42.00	49.00	56.00	83.00	73.50
12.25	14.87	18.37	21.87	25.37	28.87	35.87	42.87	49.87	56.87	83.87	74.37
13.12	15.75	19.25	22.75	26.25	29.75	36.75	43.75	50.75	57.75	64.75	75.25
14.00	16.62	20.12	23.62	27.12	30.62	37.62	44.62	51.62	58.62	65.62	76.12
14.87	17.50	21.00	24.50	28.00	31.50	38.50	45.50	52.50	59.50	66.50	77.00
15.75	18.37	21.87	25.37	28.87	32.37	39.37	46.37	53.37	60.37	67.37	77.87
16.62	19.25	22.75	26.25	29.75	33.25	40.25	47.25	54.25	61:25	68.25	78.75
17.50	20.12	23.62	27.12	30.62	34.12	41.12	48.12	55.12	62.12	69.12	79.62
11.80	14.43	17.93	21.43	24.93	28.43	35.43	42.43	49.43	56.43	83.43	73.93
12.68	15.31	18.81	22.31	25.81	29.31	36.31	43.31	50.31	57.31	64.31	74.81
13.56	16.18	19.68	23.18	26.68	30.18	37.18	44.18	51.18	58.18	65.18	75.68
14.43	17.06	20.56	24.06	27.56	31.06	38.06	45.06	52.06	59.06	66.06	76.56
15.31	17.93	21.43	24.93	28.43	31.93	38.93	45.93	52.93	59.93	66.93	77.43
16.18	18.81	22.31	25.81	29.31	32.81	39.81	46.81	53.81	60.81	67.81	78.31
17.06	19.68	23.18	26.68	30.18	33.68	40.68	47.68	54.68	61.68	68.68	79.18
12.23	14.86	18.36	21.86	25.36	28.87	35.87	42.87	49.87	56.87	83.87	74.37
13.11	15.74	19.24	22.74	26.24	29.74	36.74	43.74	50.74	57.74	64.74	75.24
13.98	16.61	20.11	23.61	27.12	30.62	37.62	44.62	51.62	58.62	65.62	76.12
14.66	17.49	20.99	24.49	27.99	31.49	38.49	45.49	52.49	59.49	66.49	76.99
....	....	....	15.71	19.21	22.72	29.72	36.73	43.73	50.73	57.74	68.24
15.74	18.36	21.86	25.36	28.87	32.37	39.37	46.37	53.37	60.37	67.37	77.87
16.61	19.24	22.74	26.24	29.74	33.24	40.24	47.24	54.24	61.24	68.24	78.74
12.66	15.29	18.79	22.29	25.79	29.30	36.30	43.30	50.30	57.30	64.30	74.80
	12.19	15.71	19.21	22.72	26.22	33.23	40.23	47.23	54.23	61.24	71.74
13.53	16.16	19.67	23.17	26.67	30.17	37.17	44.18	51.18	58.18	65.18	75.68
14.41	17.04	20.54	24.04	27.55	31.05	38.05	45.05	52.05	59.05	66.05	76.55
15.29	17.91	21.42	24.92	28.42	31.92	38.92	45.93	52.93	59.93	66.93	77.43
	12.61	16.12	19.63	23.14	26.65	33.65	40.66	47.66	54.67	61.67	72.17
13.07	15.71	19.21	22.72	26.22	29.72	36.73	43.73	50.73	57.74	64.74	75.24
16.16	18.79	22.29	25.79	29.30	32.80	39.80	46.80	53.80	60.80	67.80	78.30
13.95	16.58	20.09	23.59	27.10	30.60	37.60	44.61	51.61	58.61	65.61	76.11
14.83	17.46	20.97	24.47	27.97	31.48	38.48	45.48	52.48	59.49	66.49	76.99
10.36	13.01	16.54	20.05	23.56	27.07	34.08	41.09	48.09	55.10	62.10	72.60
15.71	18.34	21.84	25.35	28.85	32.35	39.35	46.36	53.36	60.36	67.36	77.86
13.49	16.12	19.63	23.14	26.65	30.15	37.16	44.16	51.16	58.17	65.17	75.67
....	....	....	....	16.38	19.93	26.98	34.01	41.03	48.04	55.05	65.56
		13.82	17.35	20.88	24.39	31.42	38.43	45.44	52.45	59.45	69.96
14.37	17.00	20.51	24.02	27.52	31.03	38.03	45.04	52.04	59.04	66.04	76.55
10.76	13.42	16.95	20.47	23.98	27.49	34.50	41.50	48.52	55.52	62.53	73.03
15.24	17.88	21.39	24.89	28.40	31.90	38.91	45.91	52.91	59.92	66.92	77.42
....	....	14.21	17.76	21.29	24.81	31.83	38.85	45.86	52.87	59.88	70.39♥
13.89	16.54	20.05	23.56	27.07	30.58	37.58	44.59	51.59	58.60	65.60	76.10
11.15	13.82	17.35	20.88	24.39	27.91	34.92	41.94	48.94	55.95	62.96	73.46
14.78	17.42	20.93	24.44	27.95	31.45	38.45	38.46	52.47	59.47	66.47	76.98
....	11.02	14.60	18.16	21.69	25.22	32.25	39.27	46.29	53.30	60.31	70.82♥
14.30	16.95	20.47	23.98	27.49	31.00	38.01	45.02	52.02	59.03	66.03	76.53
....	....	....	....	....	16.90	24.08	31.18	38.24	45.28	52.31	62.84
11.54	14.21	17.76	21.29	24.81	28.32	35.34	42.36	49.37	56.38	83.38	73.89

XH Belt Width Table

Belt Width Factor	1.00	1.29	1.56	1.84	2.14	2.72	3.36	4.06	4.76	6.15	7.50	8.89	10.32	11.70	13.10	14.41	15.84	17.16	18.62
Belt Width	1	1-1/4	1-1/2	1-3/4	2	2-1/2	3	3-1/2	4	5	6	7	8	9	10	11	12	13	14
Belt Width Code	100	125	150	175	200	250	300	350	400	500	600	700	800	900	1000	1100	1200	1300	1400

Shaded area indicates stock belt widths

V-Drives
FHP Drives
Drive Component Accessories
DYNA-SYNC
HT200/HTD Synchronous Drives
HT500 Synchronous Drives
Roller Chain Sprockets

SELECTION

XH Stock Drive Selections

Driven Speeds for Motor Speeds of			Speed Ratio	Pulley Combination				HP for a 1 Wide Belt for Motor Speeds of Δ		
				Driver		Driven				
1750	1160	870		No. of Teeth	Pitch Diam.	No. of Teeth	Pitch Diam.	1750	1160	870
948	628	471	1.85	26XH	7.241	48XH	13.369	17.17	12.13	9.29
933	618	464	1.88	32XH	8.913	60XH	16.711	19.87	14.57	11.29
875	580	435	2.00	30XH	8.356	60XH	16.711	19.06	13.79	10.63
875	580	435	2.00	24XH	6.685	48XH	13.369	16.14◊	11.29	8.61
875	580	435	2.00	20XH	5.570	40XH	11.141	13.85◊	9.51◊	7.23◊
833	552	414	2.10	40XH	11.141	84XH	23.396	22.22	17.44	13.79
817	541	407	2.14	28XH	7.799	60XH	16.711	18.16	12.97	9.97
802	531	399	2.18	22XH	6.127	48XH	13.369	15.03◊	10.41◊	7.92
....	523	392	2.22	18XH	5.013	40XH	11.141	....	8.61◊	6.52◊
778	516	387	2.25	32XH	8.913	72XH	20.054	19.87	14.57	11.29
758	502	377	2.31	26XH	7.241	60XH	16.711	17.17	12.13	9.29
729	483	363	2.40	40XH	11.141	96XH	26.738	22.22	17.44	13.79
729	483	363	2.40	30XH	8.356	72XH	20.054	19.06	13.79	10.63
729	483	363	2.40	20XH	5.570	48XH	13.369	13.85◊	9.51◊	7.23◊
700	464	348	2.50	24XH	6.685	60XH	16.711	16.14◊	11.29	8.61
681	451	339	2.57	28XH	7.799	72XH	20.054	18.16	12.97	9.97
667	442	331	2.63	32XH	8.913	84XH	23.396	19.87	14.57	11.29
....	434	326	2.67	18XH	5.013	48XH	13.369	....	8.61◊	6.52◊
642	425	319	2.73	22XH	6.127	60XH	16.711	15.03◊	10.41◊	7.92
632	419	314	2.77	26XH	7.241	72XH	20.054	17.17	12.13	9.29
625	414	311	2.80	30XH	8.356	84XH	23.396	19.06	13.79	10.63
583	387	290	3.00	40XH	11.141	120XH	33.423	22.22	17.44	13.79
583	387	290	3.00	32XH	8.913	96XH	26.738	19.87	14.57	11.29
583	387	290	3.00	28XH	7.799	84XH	23.396	18.16	12.97	9.97
583	387	290	3.00	24XH	6.685	72XH	20.054	16.14◊	11.29	8.61
583	387	290	3.00	20XH	5.570	60XH	16.711	13.85◊	9.51◊	7.23◊
547	363	272	3.20	30XH	8.356	96XH	26.738	19.06	13.79	10.63
542	359	269	3.23	26XH	7.241	84XH	23.396	17.17	12.13	9.29
535	355	266	3.27	22XH	6.127	72XH	20.054	15.03◊	10.41◊	7.92
....	348	261	3.33	18XH	5.013	60XH	16.711	....	8.61◊	6.52◊
510	338	254	3.43	28XH	7.799	96XH	26.738	18.16	12.97	9.97
500	331	249	3.50	24XH	6.685	84XH	23.396	16.14◊	11.29	8.61
486	322	242	3.60	20XH	5.570	72XH	20.054	13.85◊	9.51◊	7.23◊
474	314	236	3.69	26XH	7.241	96XH	26.738	17.17	12.13	9.29
467	309	232	3.75	32XH	8.913	120XH	33.423	19.87	14.57	11.29
458	304	228	3.82	22XH	6.127	84XH	23.396	15.03◊	10.41	7.92
438	290	218	4.00	30XH	8.356	120XH	33.423	19.06	13.79◊	10.63
438	290	218	4.00	24XH	6.685	98XH	26.738	16.14◊	11.29	8.61
....	290	218	4.00	18XH	5.013	72XH	20.054	....	8.61◊	6.52◊
416	276	207	4.20	20XH	5.570	84XH	23.396	13.85◊	9.51◊	7.23◊
408	270	203	4.29	28XH	7.799	120XH	33.423	18.16	12.97	9.97
401	266	200	4.36	22XH	6.127	96XH	26.738	15.03◊	10.41◊	7.92
379	251	188	4.62	26XH	7.241	120XH	33.423	17.17	12.13	9.29
....	249	186	4.67	18XH	5.013	84XH	23.396	....	8.61◊	6.52◊
365	242	181	4.80	20XH	5.570	96XH	26.738	13.85◊	9.51◊	7.23◊
350	232	174	5.00	24XH	6.685	120XH	33.423	16.14◊	11.29	8.61
....	217	162	5.33	18XH	5.013	96XH	26.738	....	8.61◊	6.52◊
321	212	159	5.45	22XH	6.127	120XH	33.423	15.03	10.41◊	7.92
292	193	145	6.00	20XH	5.570	120XH	33.423	13.85◊	9.51◊	7.23◊
....	174	130	6.67	18XH	5.013	120XH	33.423	....	8.61◊	6.52◊

Δ HP ratings are for conventional speed-reduction drives. For Speed-Up Drives refer to page PT10-17.

◊ Pulley Diameter is below recommended minimum. A reduction in belt life should be expected. Suggest alternate drive selection, whenever possible.

† ‡ See Teeth in Mesh table on opposite page.

♥ Flanges Required on both pulleys.

XH Stock Drive Selections

Nominal Center Distance Using DYNA-SYNC Belts

507XH	560XH	630XH	700XH	770XH	840XH	980XH	1120XH	1260XH	1400XH	1540XH	1750XH
....	11.39	14.99	18.55	22.10	25.63	32.66	39.69	46.71	53.72	60.73	71.24
....	....	....	14.34	17.95	21.52	28.60	35.66	42.69	49.72	56.74	67.26
....	....	....	14.71	18.33	21.91	29.01	36.07	43.11	50.13	57.15	67.68♥
....	11.77	15.38	18.95	22.50	26.03	33.08	40.11	47.13	54.14♥	61.15♥	71.67♥
11.92	14.60	18.16	21.69	25.22	28.74	35.76	42.78	49.79	56.80	63.81	74.32
....	....	....	....	....	....	20.97	28.20	35.34	42.43	49.49	60.06
....	....	....	15.08	18.71	22.30	29.41	36.47	43.52	50.55	57.57	68.10♥
....	12.14	15.77	19.34	22.90	26.43	33.49	40.52	47.54	54.56♥	61.58♥	72.09♥
12.30	14.99	18.55	22.10	25.83	29.15	36.18	43.20	50.21	57.23	64.24	74.75
....	....	....	....	....	18.40	25.64	32.77	39.86	46.91	53.96	64.50
....	....	....	15.45	19.09	22.69	29.81	36.88	43.93	50.96	57.99♥	68.52♥
....	....	....	....	....	....	....	25.02	32.30	39.47	46.59	57.21
....	....	....	....	15.03	18.76	26.02	33.17	40.26	47.32	54.37	64.92
....	12.51	16.15	19.73	23.29	26.84	33.90	40.94	47.96♥	54.98♥	62.00♥	72.52♥
....	....	....	15.82	19.47	23.07	30.20	37.28	44.34	51.38	58.41♥	68.94♥
....	....	....	....	15.38	19.13	26.41	33.56	40.66	47.73	54.78	65.33♥
....	....	....	....	....	....	22.44	29.73	36.91	44.02	51.11	61.70
10.05	12.87	16.53	20.12	23.69	27.24	34.30	41.35♥	48.38♥	55.40♥	62.42♥	72.94♥
....	....	12.41	16.19	19.85	23.46	30.60	37.69	44.74	51.79♥	58.82♥	69.36♥
....	....	....	....	15.74	19.50	26.79	33.95	41.06	48.13	55.19	65.75♥
....	....	....	....	....	....	22.81	30.11	37.30	44.42	51.51	62.10
....	....	....	....	....	....	....	....	25.52	33.10	40.45	51.28
....	....	....	....	....	....	18.85	26.48	33.81	41.02	48.17	58.82
....	....	....	....	....	....	23.17	30.49	37.69	44.82	51.91	62.51♥
....	....	....	....	16.09	19.86	27.17	34.34	41.46	48.53	55.59♥	66.16♥
....	....	12.76	16.55	20.22	23.84	30.99	38.09	45.15♥	52.20♥	59.23♥	69.77♥
....	....	....	....	....	....	19.19	26.84	34.19	41.41	48.56	59.22
....	....	....	....	....	15.82	27.55	34.73	38.07	48.94	52.31	62.91♥
....	....	....	....	16.44	20.22	23.53	30.87	41.85	45.21	56.00♥	66.57♥
....	....	13.11	16.91	20.60	24.22	31.39	38.49	45.56♥	52.61♥	59.65♥	70.19♥
....	....	....	....	....	....	19.53	27.21	34.57	41.79	48.95	59.62
....	....	....	....	....	16.16	23.89	31.25	38.46	45.60	52.71	63.32♥
....	....	....	....	16.78	20.58	27.93	35.12	42.25	49.34♥	56.41♥	66.98♥
....	....	....	....	....	....	19.87	27.57	34.94	42.18	49.34	60.01♥
....	....	....	....	....	....	....	....	26.90	34.55	41.94	52.82
....	....	....	....	....	16.49	24.25	31.62	38.84	46.00	53.10♥	63.72♥
....	....	....	....	....	....	....	....	27.25	34.91	42.31	53.20
....	....	....	....	....	....	20.20	27.93	35.31	42.56	49.73	60.41♥
....	....	....	13.08†	17.13	20.94	28.30	35.51	42.64♥	49.74♥	56.81♥	67.39♥
....	....	....	....	....	16.83	24.61	32.00	39.23	46.39♥	53.50♥	64.13♥
....	....	....	....	....	....	....	....	27.59	35.27	42.68	53.58
....	....	....	....	....	....	20.54	28.28	35.69	42.94	50.12♥	60.81♥
....	....	....	....	....	....	....	....	27.93	35.83	43.05	53.96
....	....	....	....	....	17.16†	24.97	32.37	39.61	46.78♥	53.90♥	64.53♥
....	....	....	....	....	....	20.88	28.64	36.06	43.32	50.51♥	81.20♥
....	....	....	....	....	....	....	....	28.27	35.98	43.42	54.34♥
....	....	....	....	....	....	21.21	29.00	36.43	43.70♥	50.89♥	61.60♥
....	....	....	....	....	....	....	....	28.61	36.34	43.79	54.72♥
....	....	....	....	....	....	....	20.40†	28.95	36.69	44.16	55.10♥
....	....	....	....	....	....	....	20.71‡	29.29	37.05	44.52♥	55.48♥

XH Belt Width Table

Belt Width Factor	1.00	1.29	1.56	1.84	2.14	2.72	3.36	4.06	4.76	6.15	7.50	8.89	10.32	11.70	13.10	14.41	15.84	17.16	18.62
Belt Width	1	1-1/4	1-1/2	1-3/4	2	2-1/2	3	3-1/2	4	5	6	7	8	9	10	11	12	13	14
Belt Width Code	100	125	150	175	200	250	300	350	400	500	600	700	800	900	1000	1100	1200	1300	1400

Teeth in Mesh factor (T.I.M)

Table Symbol	No. of Teeth In Mesh In Small Pulley	Factor
None	6 or More	1.00
†	5	.80

Shaded area indicates stock belt widths.

Table Symbol	No. of Teeth In Mesh In Small Pulley	Factor
‡	4	.60

FEATURES/BENEFITS PAGE PT10-2 | SPECIFICATIONS PAGE PT10-3 | SELECTION PAGE PT10-14 | ENGINEERING/TECHNICAL PAGE PT10-44

SELECTION

XL Stock Drive Selections

RPM of Faster Shaft	HP for a 1" Wide Belt for Various Pulleys												
	10XL .637 P.D.	11XL .700 P.D.	12XL .764 P.D.	14XL .891 P.D.	15XL .955 P.D.	16XL 1.019 P.D.	18XL 1.146 P.D.	20XL 1.273 P.D.	21XL 1.337 P.D.	22XL 1.401 P.D.	24XL 1.528 P.D.	28XL 1.783 P.D.	30XL 1.910 P.D.
100	.02	.02	.02	.03	.03	.03	.04	.04	.04	.04	.05	.06	.06
200	.04	.04	.05	.06	.06	.07	.07	.08	.08	.09	.10	.11	.12
300	.06	.07	.07	.09	.09	.10	.11	.12	.13	.13	.14	.17	.18
400	.08	.09	.10	.11	.12	.13	.14	.16	.17	.17	.19	.23	.24
500	.10	.11	.12	.14	.15	.16	.18	.20	.21	.22	.24	.29	.30
600	.12	.13	.14	.17	.18	.19	.22	.24	.26	.27	.29	.34	.37
700	.14	.15	.17	.20	.21	.23	.26	.28	.30	.31	.34	.40	.43
800	.16	.17	.19	.23	.24	.26	.30	.33	.34	.36	.40	.48	.49
900	.18	.20	.22	.26	.27	.30	.33	.37	.39	.40	.44	.51	.55
1000	.20	.22	.24	.29	.31	.33	.37	.41	.43	.45	.49	.57	.62
1100	.22	.25	.26	.31	.34	.36	.40	.45	.47	.49	.54	.63	.68
1160	.23	.26	.28	.33	.36	.38	.42	.46	.50	.52	.56	.66	.71
1200	.24◊	.27	.29	.34	.37	.39	.44	.49	.52	.54	.59	.68	.74
1300	.26◊	.29	.31	.37	.40	.42	.48	.53	.56	.58	.64	.74	.80
1400	.28◊	.31	.34	.40	.43	.46	.52	.57	.60	.63	.69	.80	.86
1500	.30◊	.34	.36	.43	.46	.49	.55	.61	.64	.67	.74	.86	.92
1600	.33◊	.36	.40	.46	.49	.53	.59	.65	.69	.72	.79	.91	.98
1700	.35◊	.38	.42	.49	.52	.56	.63	.67	.73	.77	.83	.97	1.04
1750	.36◊	.39	.43	.50	.53	.58	.64	.72	.75	.79	.86	1.00	1.07
1800	.37◊	.40◊	.44	.51	.55	.59	.66	.74	.77	.81	.88	1.03	1.10
2000	.41◊	.45◊	.49	.57	.62	.65	.74	.82	.86	.90	.98	1.15	1.23
2200	.45◊	.49◊	.54	.63	.68	.72	.81	.90	.94	.99	1.08	1.25	1.34
2400	.49◊	.54◊	.59	.68	.74	.79	.88	.98	1.03	1.07	1.18	1.37	1.46
2600	.53◊	.58◊	.64	.74	.80	.85	.96	1.06	1.12	1.17	1.25	1.48	1.58
2800	.57◊	.63◊	.69	.80	.86	.92	1.03	1.15	1.20	1.26	1.37	1.59	1.71
3000	.61◊	.67◊	.74	.86	.92	.98	1.10	1.23	1.28	1.34	1.46	1.71	1.82
3200	.65◊	.72◊	.79	.91	.98	1.05	1.18	1.30	1.37	1.43	1.56	1.81	1.94
3400	.69◊	.77◊	.83	.97	1.04	1.11	1.25	1.38	1.45	1.52	1.66	1.92	2.05
3500	.72◊	.79◊	.86	1.00	1.07	1.15	1.28	1.42	1.49	1.57	1.71	1.98	2.11
3600	.74◊	.81◊	.88◊	1.03	1.10	1.18	1.32	1.46	1.54	1.61	1.75	2.03	2.16
3800	.78◊	.83◊	.93◊	1.09	1.17	1.24	1.39	1.54	1.62	1.70	1.84	2.13	2.27
4000	.82◊	.90◊	.98◊	1.15	1.23	1.30	1.46	1.63	1.71	1.78	1.94	2.24	2.39
4200	.86◊	.94◊	1.03◊	1.20	1.28	1.37	1.53	1.71	1.76	1.86	2.03	2.35	2.50
4400	.90◊	.99◊	1.08◊	1.25◊	1.34	1.43	1.61	1.78	1.86	1.95	2.12	2.45	2.61
4600	.94◊	1.03◊	1.13◊	1.31◊	1.40	1.50	1.68	1.66	1.95	2.04	2.21	2.55	2.71
4800	.98◊	1.07◊	1.18◊	1.37◊	1.46	1.56	1.75	1.94	2.03	2.13	2.30	2.65	2.82
5000	1.02◊	1.12◊	1.23◊	1.42◊	1.52	1.63	1.82	2.01	2.11	2.20	2.39	2.75	2.92
5500	....	....	....	....	1.67◊	1.78	2.00	2.20	2.30	2.41	2.61	2.99	3.18
6000	....	....	....	....	1.82◊	1.94	2.16	2.39	2.50	2.61	2.82	3.23	3.41
6500	....	....	....	....	1.96◊	2.09	2.34	2.57	2.69	2.80	3.03	3.42	3.64
7000	....	....	....	....	2.11◊	2.24◊	2.50	2.75	2.87	2.99	3.23	3.65	3.84
7500	....	....	....	....	2.25◊	2.39◊	2.66	2.92	3.05	3.18	3.41	3.84	4.03
8000	....	....	....	....	....	....	2.82◊	3.10	3.23	3.34	3.59	4.02	4.21
8500	....	....	....	....	....	....	2.97◊	3.26	3.39	3.52	3.76	4.19	4.37
9000	....	....	....	....	....	....	3.13◊	3.41◊	3.55	3.68	3.92	4.34	4.51
9500	....	....	....	....	....	....	3.28◊	3.56◊	3.70	3.83	4.07	4.47	4.63
10000	....	....	....	....	....	....	3.41◊	3.71◊	3.84	3.97	4.21	4.59	4.72

XL Belt Width Table

Belt Width Factor	.15	.28	.35	.42	.57	.71	.86	1.00	1.29	1.56
Belt Width	1/4	3/8	7/16	1/2	5/8	3/4	7/8	1	1-1/4	1-1/2
Belt Width Code	025	037	043	050	062	075	087	100	125	150

Shaded area indicates stock belt widths.

◊ Pulley diameter is below recommended minimum.
A reduction in belt life should be expected. Suggest alternate drive, when ever possible.

L Stock Drive Selections

RPM of Faster Shaft	HP for a 1" Wide Belt for Various Pulleys																		
	10L 1.194 P.D.	12L 1.432 P.D.	13L Δ 1552 P.D.	14L 1.671 P.D.	15L Δ 1.790 P.D.	16L 1.910 P.D.	17L 2.029 P.D.	18L 2.149 P.D.	19L 2.268 P.D.	20L 2.387 P.D.	21L 2.507 P.D.	22L 2.626 P.D.	24L 2.865 P.D.	26L 3.104 P.D.	28L 3.342 P.D.	30L 3.581 P.D.	32L 3.820 P.D.	40L 4.775 P.D.	48L 5.730 P.D.
100	.05◊	.06	.07	.07	.08	.08	.09	.09	.10	.10	.11	.12	.13	.14	.15	.16	.17	.21	.25
200	.10◊	.13	.14	.15	.16	.17	.18	.19	.20	.21	.22	.23	.25	.27	.29	.31	.33	.42	.50
300	.16◊	.19	.20	.22	.23	.25	.27	.28	.30	.31	.33	.34	.38	.41	.44	.47	.50	.63	.75
400	.21◊	.25	.27	.29	.31	.33	.35	.38	.40	.42	.44	.46	.50	.54	.58	.62	.67	.83	1.00
500	.26◊	.31	.34	.37	.39	.42	.44	.47	.50	.52	.55	.57	.63	.68	.73	.78	.83	1.04	1.24
600	.31◊	.37	.41	.44	.47	.50	.53	.56	.59	.63	.66	.69	.75	.81	.87	.94	1.00	1.24	1.49
700	.37◊	.44	.47	.51	.55	.58	.62	.66	.69	.73	.77	.80	.87	.95	1.02	1.09	1.16	1.45	1.73
800	.42◊	.50	.54	.58	.62	.67	.71	.75	.79	.83	.87	.92	1.00	1.08	1.16	1.24	1.32	1.85	1.97
870	.45◊	.54	.59	.63	.68	.73	.77	.82	.86	.91	.95	1.00	1.08	1.17	1.26	1.35	1.44	1.79	2.14
900	.47◊	.56	.61	.66	.70	.75	.80	.84	.89	.94	.98	1.03	1.12	1.21	1.30	1.40	1.49	1.65	2.21
1000	.52◊	.62	.88	.73	.78	.83	.89	.94	.99	1.04	1.09	1.14	1.24	1.34	1.45	1.55	1.65	2.05	2.44
1100	.57◊	.69	.75	.80	.86	.92	.97	1.03	1.08	1.14	1.20	1.25	1.36	1.48	1.59	1.70	1.81	2.25	2.67
1160	.60◊	.72	.79	.85	.91	.97	1.03	1.08	1.14	1.20	1.26	1.32	1.44	1.56	1.67	1.79	1.91	2.36	2.81
1200	.63◊	.75◊	.81	.88	.94	1.00	1.06	1.12	1.18	1.24	1.30	1.36	1.49	1.61	1.73	1.85	1.97	2.44	2.90
1300	.68◊	.81◊	.68	.95	1.01	1.08	1.15	1.21	1.28	1.34	1.41	1.48	1.61	1.74	1.87	2.00	2.13	2.63	3.12
1400	.73◊	.87◊	.95	1.02	1.09	1.16	1.23	1.30	1.38	1.45	1.52	1.59	1.73	1.87	2.01	2.15	2.29	2.82	3.34
1500	.78◊	.94◊	1.02◊	1.09	1.16	1.24	1.32	1.40	1.47	1.55	1.62	1.70	1.85	2.00	2.15	2.30	2.44	3.01	3.55
1600	.83◊	1.00◊	1.08◊	1.16	1.24	1.32	1.41	1.49	1.57	1.65	1.73	1.81	1.97	2.13	2.28	2.44	2.60	3.20	3.76
1700	.89◊	1.06◊	1.15◊	1.23	1.32	1.41	1.49	1.58	1.66	1.75	1.83	1.92	2.09	2.26	2.42	2.59	2.75	3.38	3.97
1750	.91◊	1.09◊	1.17◊	1.27	1.36	1.45	1.54	1.62	1.71	1.80	1.89	1.98	2.15	2.32	2.49	2.66	2.83	3.47	4.06
1800	....	1.12◊	1.21◊	1.30◊	1.39	1.49	1.58	1.67	1.76	1.85	1.94	2.03	2.21	2.38	2.56	2.73	2.90	3.55	4.16
1900	....	1.18◊	1.27◊	1.38◊	1.47	1.57	1.66	1.76	1.85	1.95	2.04	2.14	2.32	2.51	2.69	2.87	3.05	3.73	4.35
2000	....	1.24◊	1.35◊	1.45◊	1.55	1.65	1.75	1.85	1.95	2.05	2.15	2.25	2.44	2.63	2.82	3.01	3.19	3.89	4.54
2200	....	1.36◊	1.48◊	1.59◊	1.70	1.81	1.92	2.03	2.14	2.25	2.35	2.46	2.67	2.88	3.08	3.28	3.49	4.23	4.89
2400	....	1.49◊	1.61◊	1.73◊	1.85	1.97	2.09	2.21	2.32	2.44	2.56	2.67	2.90	3.12	3.34	3.56	3.76	4.54	5.21
2500	....	1.55◊	1.68◊	1.80◊	1.92◊	2.05	2.17	2.30	2.42	2.54	2.66	2.78	3.01	3.24	3.47	3.68	3.90	4.69	5.35
2600	....	1.61◊	1.74◊	1.87◊	2.00◊	2.13	2.26	2.38	2.51	2.63	2.76	2.88	3.12	3.36	3.59	3.81	4.03	4.83	5.48
2800	....	1.73◊	1.87◊	2.01◊	2.14◊	2.29	2.42	2.56	2.69	2.82	2.96	3.09	3.34	3.59	3.83	4.06	4.29	5.10	5.73
3000	....	1.85◊	2.00◊	2.15◊	2.29◊	2.44	2.59	2.73	2.87	3.01	3.15	3.29	3.55	3.81	4.06	4.30	4.54	5.35	5.94
3200	....	....	2.13◊	2.28◊	2.44◊	2.60	2.74	2.90	3.04	3.19	3.34	3.48	3.76	4.03	4.29	4.54	4.77	5.57	6.11
3400	....	....	2.26◊	2.42◊	2.58◊	2.75	2.91	3.07	3.22	3.37	3.53	3.67	3.97	4.24	4.50	4.76	4.99	5.78	6.23
3500	....	....	2.32◊	2.49◊	2.65◊	2.83	2.99	3.15	3.31	3.46	3.62	3.77	4.06	4.35	4.61	4.86	5.10	5.87	6.27
3600	....	....	....	2.55◊	2.73◊	2.90◊	3.07◊	3.23	3.39	3.55	3.71	3.86	4.16	4.45	4.72	4.97	5.21	5.95	6.31
3800	....	....	....	2.69◊	2.86◊	3.03◊	3.22◊	3.40	3.56	3.73	3.89	4.05	4.35	4.64	4.91	5.16	5.40	6.09	6.33
4000	....	....	....	2.83◊	3.00◊	3.20◊	3.37◊	3.56	3.73	3.89	4.06	4.23	4.54	4.83	5.10	5.34	5.57	6.21	6.31
4200	....	....	....	....	3.15◊	3.34◊	3.53◊	3.72	3.88	4.06	4.23	4.40	4.72	5.01	5.28	5.52	5.74	6.28	6.23
4400	....	....	....	....	3.28◊	3.49◊	3.67◊	3.86	4.04	4.22	4.40	4.57	4.89	5.19	5.44	5.68	5.88	6.33	6.09†
4600	....	....	....	....	3.41◊	3.63◊	3.82◊	4.01	4.20	4.38	4.56	4.73	5.05	5.34	5.59	5.82	6.01	6.35	5.89†
4800	....	....	....	....	3.54◊	3.77◊	3.96◊	4.17	4.35	4.54	4.72	4.89	5.20	5.48	5.73	5.94	6.12	6.32	5.63†
5000	....	....	....	....	3.67◊	3.91◊	4.10◊	4.31◊	4.50◊	4.68	4.86	5.04	5.35	5.63	5.86	6.06	6.20	6.26	5.30†
5200	....	....	....	....	3.81◊	4.03◊	4.23◊	4.45◊	4.63◊	4.82	5.01	5.18	5.48	5.76	5.98	6.15	6.27	6.16†	4.91†
5400	....	....	....	....	3.93◊	4.17◊	4.37◊	4.59◊	4.77◊	4.96	5.14	5.31	5.61	5.88	6.07	6.23	6.32	6.01†	4.44†
5600	....	....	....	....	4.05◊	4.29◊	4.50◊	4.72◊	4.91◊	5.09	5.28	5.44	5.73	5.98	6.16	6.28	6.34	5.83†	3.89†
5800	....	....	....	....	4.17◊	4.42◊	4.62◊	4.84◊	5.04◊	5.22	5.40	5.57	5.84	6.07	6.23	6.32	6.34	5.60†	3.27†
6000	....	....	....	....	4.29◊	4.5◊	4.75◊	4.97◊	5.15◊	5.34	5.52	5.68	5.93	6.15	6.28	6.35	6.33	5.32†	2.57†

L Belt Width Table

Belt Width Factor	.28	.35	.45	.57	.71	.86	1.00	1.29	1.56	1.84	2.14	2.72	3.36
Belt Width	3/8	7/16	1/2	5/8	3/4	7/8	1	1-1/4	1-1/2	1-3/4	2	2-1/2	3
Belt Width Code	037	043	050	062	075	087	100	125	150	175	200	250	300

Shaded area indicates stock belt widths.

Δ Special non-stock sizes.

† Belt Speed exceeds 6500 FPM – consult Dodge.

◊ Pulley diameter is below recommended minimum.
A reduction in belt life should be expected. Suggest alternate drive, when ever possible.

FEATURES/BENEFITS PAGE PT10-2	SPECIFICATIONS PAGE PT10-3	SELECTION PAGE PT10-14	ENGINEERING/TECHNICAL PAGE PT10-44

SELECTION

H Stock Drive Selections

RPM of Faster Shaft	HP for a 1" Wide Belt for Various Pulleys																
	14H 2.228 P.D.	16H 2.546 P.D.	17H 2.706 P.D.	18H 2.865 P.D.	19H 3.024 P.D.	20H 3.183 P.D.	21H 3.342 P.D.	22H 3.501 P.D.	24H 3.820 P.D.	26H 4.138 P.D.	28H 4.456 P.D.	30H 4.775 P.D.	32H 5.039 P.D.	36H Δ 5.730 P.D.	40H 6.366 P.D.	44H Δ 7.003 P.D.	48H 7.639 P.D.
100	.25	.28	.30	.32	.34	.35	.37	.39	.42	.46	.50	.53	.57	.64	.71	.78	.85
200	.50	.57	.60	.64	.67	.71	.74	.78	.85	.92	.99	1.06	1.13	1.27	1.41	1.56	1.70
300	.74	.85	.90	.96	1.01	1.06	1.11	1.17	1.27	1.38	1.49	1.59	1.70	1.91	2.12	2.33	2.54
400	.99	1.13	1.20	1.27	1.34	1.41	1.49	1.56	1.70	1.84	1.98	2.12	2.26	2.54	2.82	3.10	3.38
500	1.24	1.41	1.50	1.59	1.68	1.77	1.86	1.94	2.12	2.30	2.47	2.65	2.82	3.17	3.52	3.87	4.22
600	1.49	1.70	1.80	1.91	2.02	2.12	2.23	2.33	2.54	2.75	2.96	3.17	3.38	3.80	4.22	4.64	5.05
700	1.73	1.98	2.10	2.23	2.35	2.47	2.59	2.72	2.96	3.21	3.45	3.70	3.94	4.43	4.91	5.40	5.88
800	1.98	2.26	2.40	2.54	2.68	2.82	2.96	3.10	3.38	3.66	3.94	4.22	4.50	5.05	5.60	6.15	6.69
870	2.15	2.46	2.61	2.76	2.91	3.07	3.22	3.37	3.68	3.98	4.28	4.58	4.89	5.49	6.08	6.67	7.26
900	2.23◊	2.54	2.70	2.86	3.01	3.17	3.33	3.49	3.80	4.11	4.43	4.74	5.05	5.67	6.29	6.89	7.50
1000	2.47◊	2.82	3.00	3.17	3.35	3.52	3.70	3.87	4.22	4.57	4.91	5.26	5.60	6.29	6.96	7.63	8.30
1100	2.72◊	3.10	3.30	3.49	3.68	3.87	4.06	4.26	4.64	5.02	5.40	5.77	6.15	6.90	7.63	8.36	9.08
1160	2.86◊	3.27	3.47	3.68	3.88	4.08	4.28	4.48	4.89	5.28	5.68	6.08	6.48	7.26	8.03	8.80	9.55
1200	....	3.38◊	3.59	3.80	4.01	4.22	4.43	4.64	5.05	5.46	5.88	6.29	6.69	7.50	8.30	9.08	9.86
1300	....	3.66◊	3.89	4.12	4.34	4.57	4.79	5.01	5.46	5.91	6.35	6.79	7.23	8.10	8.95	9.79	10.62
1400	....	3.94◊	4.19	4.43	4.67	4.91	5.15	5.39	5.87	6.35	6.83	7.30	7.77	8.69	9.60	10.49	11.36
1500	....	4.22◊	4.48◊	4.74	5.00	5.26	5.51	5.77	6.28	6.79	7.30	7.80	8.30	9.28	10.24	11.18	12.09
1600	....	4.50◊	4.78◊	5.05	5.33	5.60	5.87	6.15	6.69	7.23	7.77	8.30	8.82	9.86	10.87	11.85	12.80
1700	....	4.77◊	5.07◊	5.36	5.65	5.94	6.23	6.52	7.10	7.67	8.23	8.79	9.34	10.43	11.49	12.51	13.50
1750	....	4.91◊	5.22◊	5.52	5.81	6.11	6.41	6.71	7.30	7.88	8.46	9.03	9.60	10.71	11.79	12.84	13.84
1800	....	5.05◊	5.36◊	5.67◊	5.98	6.28	6.59	6.89	7.50	8.10	8.69	9.28	9.86	10.99	12.09	13.15	14.18
1900	....	5.42◊	5.66◊	5.98◊	6.30	6.62	6.94	7.26	7.90	8.53	9.15	9.76	10.36	11.55	12.69	13.78	14.83
2000	....	5.60	5.95◊	6.28◊	6.62	6.96	7.30	7.63	8.29	8.95	9.60	10.24	10.87	12.10	13.27	14.40	15.46
2100	....	....	....	6.59◊	6.94	7.29	7.65	8.00	8.69	9.37	10.05	10.71	11.36	12.63	13.84	14.99	16.08
2200	....	....	....	6.89◊	7.26	7.63	8.00	8.36	9.08	9.79	10.49	11.18	11.85	13.16	14.40	15.57	16.66
2300	....	....	....	7.20◊	7.58	7.96	8.34	8.72	9.47	10.21	10.93	11.64	12.33	13.68	14.94	16.13	17.23
2400	....	....	....	7.50◊	7.90	8.29	8.69	9.08	9.85	10.62	11.37	12.09	12.80	14.18	15.46	16.66	17.76
2500	....	....	....	7.80◊	8.21◊	8.62	9.03	9.44	10.23	11.02	11.80	12.54	13.27	14.68	15.98	17.18	18.27
2600	....	....	....	8.10◊	8.52◊	8.95	9.37	9.79	10.61	11.42	12.22	12.98	13.72	15.16	16.47	17.67	18.75
2800	....	....	....	8.69◊	9.14◊	9.59	10.04	10.49	11.35	12.21	13.05	13.84	14.61	16.09	17.41	18.60	19.63
3000	....	....	....	9.28◊	9.75◊	10.23	10.70	11.18	12.08	12.98	13.85	14.67	15.46	16.96	18.27	19.42	20.38
3200	....	....	....	9.85◊	10.36◊	10.85	11.35	11.85	12.79	13.72	14.63	15.46	18.27	17.78	19.06	20.14	20.99
3400	....	....	....	10.43◊	10.95◊	11.47	11.99	12.51	13.48	14.45	15.37	16.22	17.03	18.53	19.76	20.75	21.46†
3500	....	....	....	10.71◊	11.24◊	11.77	12.31	12.84	13.82	14.80	15.74	16.59	17.40	18.89	20.08	21.01	21.63†
3600	....	....	....	....	....	12.07◊	12.62	13.16	14.16	15.15	16.09	16.95	17.75	19.22	20.37	21.24†	21.77†
3800	....	....	....	....	....	12.67◊	13.23	13.79	14.81	15.82	16.78	17.63	18.42	19.85	20.89	21.60†	21.92†
4000	....	....	....	....	....	13.24◊	13.82	14.40	15.44	16.46	17.43	18.27	19.04	20.40	21.31†	21.83†	21.90†
4200	....	....	....	....	....	13.81◊	14.41	15.00	16.04	17.08	18.05	18.87	19.61	20.88	21.62†	21.93†	21.70†
4400	....	....	....	....	....	14.36◊	14.97	15.57	16.63	17.67	18.82	18.42	20.12	21.27†	21.83†	21.87†	21.32†
4600	....	....	....	....	....	14.90◊	15.52◊	16.13	17.18	18.22	19.16	19.90	20.57	21.58†	21.82†	21.67†	20.73†
4800	....	....	....	....	....	15.42◊	16.05◊	16.67	17.71	18.74	19.66	20.37	20.96	21.81†	21.89†	21.30†	19.93†
5000	....	....	....	....	....	15.93◊	16.56◊	17.19	18.22	19.23	20.12	20.77	21.29†	21.95†	21.73†	20.77†	....
5200	....	....	....	....	....	16.41◊	17.05◊	17.69	18.69	19.68	20.53	21.11†	21.54†	21.99†	21.44†	20.06†	....
5400	....	....	....	....	....	18.89◊	17.53◊	18.16◊	19.13	20.09	20.90	21.39†	21.73†	21.93†	21.02†	....	....
5600	....	....	....	....	....	17.34◊	17.98◊	18.61◊	19.55	20.47	21.22†	21.62†	21.85†	21.76†	20.45†	....	....
5800	....	....	....	....	....	17.77◊	18.41◊	19.04◊	19.93	20.80	21.49†	21.78†	21.89†	21.50†	19.75†	....	....
6000	....	....	....	....	....	18.19◊	18.82◊	19.41◊	20.27	21.10†	21.70†	21.88†	21.85†	21.12†	....	....	....

H Belt Width Table

Belt Width Factor	.42	.57	.71	.86	1.00	1.29	1.56	1.84	2.14	2.72	3.36	4.06	4.76	6.15	7.50	8.89	10.32
Belt Width	1/2	5/8	3/4	7/8	1	1-1/4	1-1/2	1-3/4	2	2-1/2	3	3-1/2	4	5	6	7	8
Belt Width Code	050	062	075	087	100	125	150	175	200	250	300	350	400	500	600	700	800

Shaded area indicates stock belt widths.

Δ Special non-stock sizes.

† Belt Speed exceeds 6500 FPM – consult Dodge.

◊ Pulley diameter is below recommended minimum.
A reduction in belt life should be expected. Suggest alternate drive, when ever possible.

FEATURES/BENEFITS PAGE PT10-2	SPECIFICATIONS PAGE PT10-3	SELECTION PAGE PT10-14	ENGINEERING/TECHNICAL PAGE PT10-44

DODGE®

XH Basic Horsepower Ratings

RPM of Faster Shaft	HP for a 1" Wide Belt for Various Pulleys								
	18 XH 5.013 P.D.	20 XH 5.570 P.D.	22 XH 6.127 P.D.	24 XH 6.685 P.D.	26 XH 7.241 P.D.	28 XH 7.799 P.D.	30 XH 8.356 P.D.	32 XH 8.913 P.D.	40 XH 11.141 P.D.
100	0.76◊	0.84	0.93	1.01	1.11	1.18	1.26	1.34	1.68
200	1.51◊	1.68	1.85	2.02	2.19	2.36	2.52	2.69	3.37
300	2.28◊	2.52	2.78	3.03	3.28	3.54	3.78	4.03	5.02
400	3.03◊	3.37	3.70	4.03	4.37	4.70	5.02	5.36	6.66
480	3.63◊	4.03	4.43	4.82	5.22	5.62	6.00	6.40	7.95
500	3.78◊	4.20◊	4.61	5.02	5.44	5.85	6.26	6.71	8.26
510	3.86◊	4.29◊	4.71	5.12	5.54	5.97	6.37	6.80	8.42
570	4.30◊	4.77◊	5.25	5.72	6.17	6.65	7.10	7.56	9.36
600	4.53◊	5.02◊	5.52	6.00	6.50	6.98	7.47	7.95	9.82
680	5.12◊	5.68◊	6.24	6.80	7.34	7.88	8.42	8.96	11.04
700	5.27◊	5.84◊	6.42	6.98	7.54	8.10	8.66	9.21	11.35
800	6.00◊	6.66◊	7.31	7.95	8.59	9.21	9.83	10.44	12.80
870	6.52◊	7.23◊	7.92	8.61	9.29	9.97	10.63	11.29	13.79
900	6.74◊	7.46◊	8.19◊	8.90	9.59	10.29	10.97	11.64	14.18
1000	7.47◊	8.26◊	9.05◊	9.82	10.59	11.35	12.08	12.80	15.51
1100	8.19◊	9.05◊	9.91◊	10.75	11.56	12.38	13.15	13.92	16.74
1160	8.61◊	9.51◊	10.41◊	11.29	12.13	12.97	13.79	14.57	17.44
1200	....	9.83◊	10.75◊	11.64◊	12.51	13.37	14.29	14.99	17.89
1300	....	10.59◊	11.57◊	12.51◊	13.44	14.32	15.18	16.01	18.94
1400	....	11.35◊	12.37◊	13.37◊	14.32	15.25	16.14	16.98	19.87
1500	....	12.08◊	13.15◊	14.19◊	15.18	16.14	17.03	17.89	20.71
1600	....	12.80◊	13.92◊	14.99◊	16.01	16.98	17.14	18.82	21.42
1700	....	13.50◊	14.66◊	15.76◊	16.80	17.78	18.68	19.51	21.99
1750	....	13.85◊	15.03◊	16.14◊	17.17	18.16	19.06	19.87	22.22
1800	....	....	15.37◊	16.51◊	17.56◊	18.53	19.42	20.22	22.35
1900	....	....	16.07◊	17.22◊	18.65◊	19.23	20.69	20.86	22.70
2000	....	....	16.74◊	17.89◊	18.94◊	19.87	20.71	21.42	22.84
2100	....	....	17.39◊	18.53◊	19.56◊	20.48	21.25	21.88	22.81
2200	....	....	18.00◊	19.43◊	20.14◊	21.01	21.72	22.27	22.61
2300	....	....	18.58◊	19.70◊	20.67◊	21.47	22.11	22.55	22.30†
2400	....	....	19.13◊	20.22◊	21.14◊	21.88	22.42	22.75	21.65†
2500	....	....	....	20.71◊	21.57◊	22.22◊	22.64	22.84	20.89†
2600	....	....	....	21.14◊	21.94◊	22.49◊	22.80	22.82	19.92†
2800	....	....	....	21.89◊	22.49◊	22.81◊	22.81	22.47†	....
3000	....	....	....	22.42◊	22.80◊	22.81◊	22.44†	21.65†	....
3200	....	....	....	22.75◊	22.82◊	22.47†◊	21.65†	20.33†	....
3400	....	....	....	22.84◊	22.58◊	21.78†◊	20.42†	18.48†	....
3500	....	....	....	22.81◊	22.34†◊	21.29†◊	19.64†	....	....
3600	....	....	....	22.71◊	22.02†◊	20.72†◊	18.73†	....	....
3800	....	....	....	22.31†◊	21.41†◊	19.22†◊	....	....	....
4000	....	....	....	21.65†◊	19.92†◊	....	....	....	....
4200	....	....	....	20.71†◊	18.33†◊	....	....	....	....
4400	....	....	....	19.47†◊	....	....	....	....	....

XXH Basic Horsepower Ratings

RPM of Faster Shaft	HP for a 1" Wide Belt for Various Pulleys							
	18 XXH 7.162 P.D.	20 XXH 7.958 P.D.	22 XXH 8.753 P.D.	24 XXH 9.549 P.D.	26 XXH 10.345 P.D.	30 XXH 11.937 P.D.	32 XXH 13.528 P.D.	40 XXH 15.915 P.D.
100	1.33◊	1.48	1.83	1.77	1.92	2.21	2.51	2.95
200	2.66◊	2.95	3.24	3.54	3.84	4.42	5.00	5.87
300	3.98◊	4.42	4.85	5.29	5.72	6.58	7.45	8.73
400	5.29◊	5.87	8.44	7.02	7.60	8.73	9.85	11.49
480	6.33◊	7.02	7.70	8.39	9.06	10.40	11.71	13.61
500	6.63◊	7.31◊	8.02	8.73	9.43	10.81	12.17	14.13
510	6.72◊	7.45◊	8.17	8.89	9.61	11.02	12.39	14.39
570	7.50◊	8.31◊	9.11	9.90	10.68	12.23	13.73	15.89
600	7.88◊	8.73◊	9.57	10.40	11.22	12.83	14.39	16.62
680	8.89◊	9.85◊	10.78	11.71	12.62	14.39	16.09	18.49
700	9.15◊	10.13◊	11.09	12.03	12.96	14.77	16.51	18.93
800	10.40◊	11.49◊	12.56	13.62	14.64	16.62	18.49	21.02
870	10.85◊	12.43◊	13.56	14.70	15.79	17.88	19.78	22.34
900	11.69◊	12.83◊	14.00◊	15.15	16.23	18.37	20.31	22.86
1000	12.83◊	14.14◊	15.40◊	16.62	17.80	20.01	21.98	24.44
1100	14.00◊	15.40◊	16.94◊	18.00	19.26	21.50	23.45	25.70
1160	14.70◊	16.14◊	17.52◊	18.84	20.01	22.34	24.23	26.29
1200	....	16.62◊	18.03◊	19.37◊	20.62	22.88	24.71	26.62
1300	....	17.80◊	19.26◊	19.88◊	21.88	24.07	26.75	27.18
1400	....	18.93◊	20.41◊	21.79◊	23.03	26.10	26.54	27.33
1500	....	19.19◊	21.50◊	22.88◊	24.07	26.95	27.06	27.05
1600	....	21.02◊	22.52◊	23.84◊	24.98	26.62	27.32	26.33†
1700	....	21.99◊	23.45◊	24.71◊	25.75	27.07	27.27	25.11†
1750	....	22.43◊	23.88◊	25.11◊	26.08	27.22	27.12	24.31†
1800	....	22.87◊	24.29◊	26.47◊	26.38◊	27.31	26.89	23.36†
1900	....	23.69◊	25.04◊	26.11◊	26.86◊	27.31	26.18†	....
2000	....	24.44◊	25.70◊	26.62◊	27.18◊	27.08	26.11†	....
2100	....	25.11◊	26.24◊	27.00◊	27.33◊	26.56†	23.66†	....
2200	....	25.70◊	26.69◊	27.24◊	27.31◊	26.79†	....	....
2300	....	26.21◊	27.03◊	27.33◊	27.09◊	24.74†	....	....
2400	....	26.62◊	27.24◊	27.28◊	26.69†	23.36†	....	....
2500	....	29.95◊	27.33◊	27.06◊	26.07†	....	....	....
2600	....	27.18◊	27.30◊	26.69†	25.25†	....	....	....
2800	....	27.34◊	26.83◊	25.40†	22.95†	....	....	....
3000	....	27.07◊	26.79	23.36†	....	....	....	....
3200	....	....	....	....	....	....	....	....
3400	....	....	....	....	....	....	....	....
3500	....	....	....	....	....	....	....	....
3600	....	....	....	....	....	....	....	....
3800	....	....	....	....	....	....	....	....
4000	....	....	....	....	....	....	....	....
4200	....	....	....	....	....	....	....	....
4400	....	....	....	....	....	....	....	....

XH, XXH Belt Width Table

Belt Width Factor	1.00	1.29	1.56	1.84	2.14	2.72	3.36	4.06	4.76	6.15	7.50	8.89	10.32	11.70	13.10	14.41	15.84	17.16	18.62
Belt Width	1	1-1/4	1-1/2	1-3/4	2	2-1/2	3	3-1/2	4	5ý	6	7	8	9	10	11	12	13	14
Belt Width Code	100	125	150	175	200	250	300	350	400	500	600	700	800	900	1000	1100	1200	1300	1400

Shaded area indicates stock belt widths.

† Belt Speed exceeds 6500 FPM – consult Dodge.

◊ Pulley diameter is below recommended minimum.
A reduction in belt life should be expected. Suggest alternate drive, when ever possible.

Δ Stock with XXH Series only.

FEATURES/BENEFITS PAGE PT10-2	SPECIFICATIONS PAGE PT10-3	SELECTION PAGE PT10-14	ENGINEERING/TECHNICAL PAGE PT10-44

ENGINEERING/TECHNICAL

Dimensions, Tolerances, etc.

Warning - Do not use DYNA-SYNC Pulleys with belt speed exceeding 6500 fpm. May cause pulleys to fragment resulting in personal injury or property damage.

Concentricity and Face Run-Out Tolerances

Runout (T.I.R.◊)	O.D.	Tol.
Radial	8" & under	.005"
	For each add'l. inch of O.D. add .0005"	
Axial	1" & Under	.001"
	For each add'l. inch of O.D. thru 10" add .001"	
	For each add'l. inch of O.D. over 10" add .0005"	

◊Total Indicator Reading

Reborable Pulley Bore Tolerances

Bore Size	Tol.
15/16" & Under	.0010" - .0000"
1" to 1-15/16"	.0015" - .0000"
2" to 2-15/16"	.0020" - .0000"
3" & Over	.0025" - .0000"

Rebore Charges–Reborable pulley alteration charges are shown in MLP Price Book. TAPER-LOCK pulleys accommodate all common tolerance variations found in commercial shafting.

Balancing–All DYNA-SYNC Pulleys have been given a careful static balance for operation up to 6500 FPM. When vibration is a problem, dynamic balancing is recommended – Consult price book MLP. (See Warning above)

Special Pulleys–In 1/5 thru 1-1/4" pitches, pulleys can be made to suit customer's specifications and may be furnished in sizes not listed on previous pages. Send us your inquiry.

Standard Keyways

Bore Range	Keyway
5/16 - 7/16 Incl.	3/32 x 3/64
Over 7/16 - 9/16 Incl.	1/8 x 1/16
Over 9/16 - 7/8 Incl.	3/16 x 3/32
Over 7/8 - 1-1/4 Inc.	1/4 x 1/8
Over 1-1/4 - 1-3/8 Inc.	5/16 x 5/32
Over 1-3/8 - 1-3/4 Incl.	3/8 x 3/16
Over 1-3/4 - 2-1/4 Inc.	1/2 x 1/4
Over 2-1/4 - 2-3/4 Incl.	5/8 x 5/16
Over 2-3/4 - 3-1/4 Incl.	3/4 x 3/8

Pulley Outside Diameter/Diameter Over Belt

Pitch	Pulley O.D.	Diameter Over Belt
XL	P.D.- 0.02"	P.D.+0.08"
L	P.D.- 0.03"	P.D.+0.11"
H	P.D.- 0.054"	P.D.+0.11"
XH	P.D.- 0.11"	P.D.+0.27"
XXH	P.D.- 0.12"	. . . . .

NOMENCLATURE

Pulleys

TL – Bush System
30 – No. of Teeth
H – Pitch Code
150 – Belt Width (x 100) =1.5"

Belts

900 – Belt Lgth. (x10) = 90.0"
H – Pitch Code
300 – Belt Width (x100) - 3.0"

1/5" pitch (XL)	3/8" pitch (L)	1/2" pitch (H)	7/8" pitch (XH)	1-1/4" pitch (XXH)
		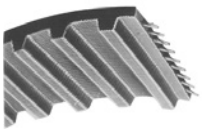	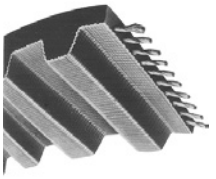	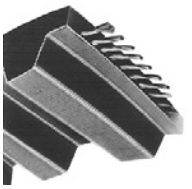
Typical uses are shown below the Tooth Dimensions Sketches				
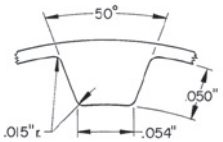	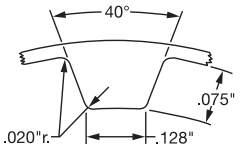	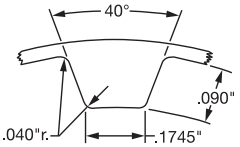	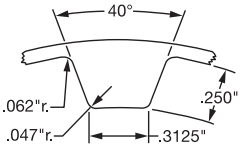	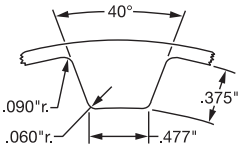
Business machines, instrumentation, sound equipment	FHP applications such as home appliances, small tools, pumps, blowers.	Machine tools, pumps, fans presses, motor-generator sets.	Medium-torque applications - such as heavy industrial equipment.	High torque abolitions - such as heavy industrial equipment

Installing / Tensioning DYNA-SYNC Drives

Alignment

Use straight edge to check parallel and offset alignment. Align pulleys within 1/4° or 1/16" per foot center distance. Supporting framework must be rigid.

Pulley Flanges

At least one pulley must have flanges. If center distance is more than 8 times the diameter of the smallest pulley, both pulleys should be flanged. Vertical shaft drives may require flanges on both pulleys.

Installation

Reduce center distance so that belt can be slipped into place without forcing. Do not pry belt onto pulleys. Increase center distance to tighten belt. Belt should be snug, but not excessively tight. If belt has a tendency to "jump teeth" during operation, increase belt tension.

Idlers

Adjustable center distance is preferred over idlers to tension belt. Idlers should be positioned on the slack side of the drive. Inside idlers are preferred over outside idlers. Idler diameter should be at least as large as the smallest pulley.

TENSIONING THE DRIVE –

Simple Tensioning Procedure:

Step 1 – Calculate the value of the deflection force "f" from the following formula, referring to drawing below.

$$\text{Force of Deflection } f = \frac{T + (S/L)\,K}{16}$$

Where S = Span distance in inches

T = Tension in Lbs. from Table below

K = Constant from Table

L = Length of Belt

Step 2 – Using a straight edge as a reference, apply enough force to deflect belt 1/64" for every inch of center span. If this force is less than the calculated "f", increase center distance of pulleys. If more than "f", decrease center distance of pulleys.

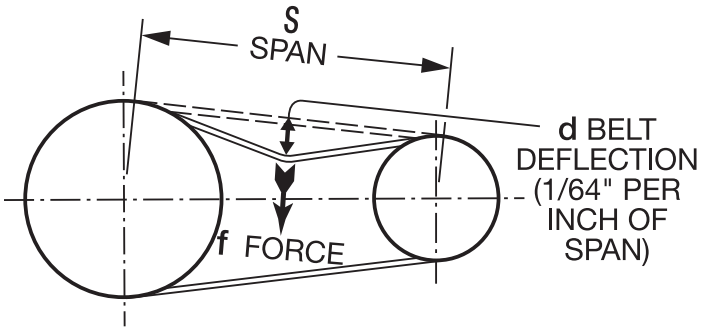

Belt Deflection Force T and K Values

Belt Pitch		Values #	Belt Width 1/4	3/8	1/2	5/8	3/4	1	1-1/2	2	2-1/2	3	4	5	6	8	10
XL	1/5"	T	6.7	10	15	20	24.2	34.2	...	...	...	...	...	...	...	...	...
		K	.85	1.7	2.7	3.6	4.7	6.7	...	...	...	...	...	...	...	...	...
L	3/8"	T	...	11.4	17.1	22.1	27.9	39.3	61.4	...	...	...	...	...	...	...	...
		K	...	8.5	9.9	14	17	24	37	...	...	...	...	...	...	...	...
H	1/2"	T	...	...	39.3	53.3	66	93.3	145.3	200	254	313	444	574	700	...	....
		K	...	...	17	22	32	46	71	95	125	152	210	265	320	...	...
XH	7/8"	T	...	...	...	...	...	...	...	227	288	356	504	652	795	1094	1388
		K	...	...	...	...	...	...	...	190	250	305	440	568	700	1080	1330
XXH	1-1/4"	T	...	...	...	...	...	...	...	556	707	873	1238	1599	1950	2683	3406
		K	...	...	...	...	...	...	...	310	410	500	710	920	1100	1500	

#T = Tension in Pounds; K = constant for above formula.

Allowable Working Tension (Ta) Lbs.

Belt Pitch		Belt Width 1/4	3/8	1/2	5/8	3/4	1	1-1/2	2	2-1/2	3	4	5	6	8	10	12	14
XL	1/5"	8	12	18	24	29	41	...	...	...	...	...	...	...	...	...	...	....
L	3/8"	...	16	24	31	39	55	86	118	150	185	...	...	...	...	...	...	....
H	1/2"	...	...	59	80	99	140	218	300	381	470	666	861	1050	...	...	...	....
XH	7/8"	...	...	...	...	...	...	...	409	519	641	908	1175	1431	1969	2499	3022	3552
XXH	1-1/4"	...	...	...	...	...	...	...	500	636	786	1114	1439	1755	2415	3065	3706	4357

Note: These values have not been corrected for centrifugal force loss.

FEATURES/BENEFITS PAGE PT10-2	SPECIFICATIONS PAGE PT10-3	SELECTION PAGE PT10-14	ENGINEERING/TECHNICAL PAGE PT10-44

NOTES

CONTENTS

HT200/HTD Synchronous Belt Drives

Features/Benefits PT11-2

Specification

HT TAPER-LOCK Sprockets PT11-4

MPB & BTS Sprockets PT11-9

Fin-Fan Sprockets PT11-9

QD HTD Sprockets PT11-10

HT200 Belts PT11-17

Selection

Procedure PT11-19

HT200 Basic HP Rating PT11-22

HTD/HT100 Basic HP Ratings PT11-27

5MM Ratio/Center Distance Tables PT11-35

8MM Ratio/Center Distance Tables PT11-38

14MM Ratio/Center Distance Tables PT11-48

20MM Ratio/Center Distance Tables PT11-60

Engineering/Technical PT11-64

Part Number Index INDEX-1

Keyword Index INDEX-43

FEATURES/BENEFITS

DODGE HT200 Drives

High Torque Synchronous Belt Drives

- 200% Rating of HTD
- Quieter Operation
- More Compact
- 8MM & 14MM Pitch

Plus all the benefits of standard HTD Drives:

- Positive, non-slip drive
- No lubrication required
- Non-stretch
- Corrosion resistant
- Abrasion resistant
- Virtually no backlash
- Clean operation
- Long life
- Low maintenance

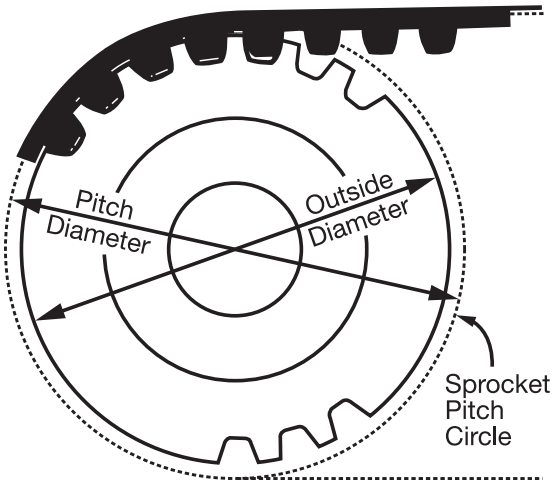

THE TECHNOLOGY OF HT200 PERFORMANCE

Advanced Tooth Profile Design

- Optimizes distribution of load forces between belt and sprocket.
- Improves dynamic efficiency between sprocket and belt.
- Increases torque capacity.
- Allows more compact, narrower drive.
- Operates more quietly.

Belt Construction

- Tougher Chloroprene rubber resists tooth shear, increases load capacity.
- Strong, stretch-resistant tensile cords.
- Tough, wear-resistant nylon tooth facing keeps friction low, protects from wear.

HT200

- Compact Design
- Uses HT TAPER-LOCK Sprockets
- Competitively Priced

FEATURES/BENEFITS

DODGE HT200 Drives

HT TAPER-LOCK Sprockets

- Torque Rated: Shaft gripping strength to meet the higher demands of the 200% rating of HT200 Belts.
- Compatible: Accepts HT200 or standard HTD belts.
- Compact: Save shaft space with compact TAPER-LOCK design.
- Reduce Overhung Load: Compact design allows closer mounting to motor or reducer bearings. Improves bearing life, reduces maintenance costs.

TAPER-LOCK
THE Compact Synchronous Drive

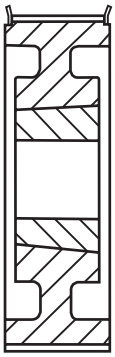

TAPER-LOCK HT

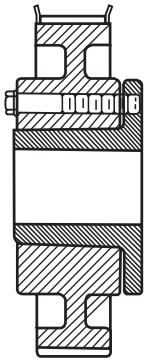

FLANGE-BUSHED SPROCKET

Compact TAPER-LOCK design takes up less shaft space than narrow width belts or products using flanged style bushing. The result is a more compact, economical synchronous drive.

BELT NOMENCLATURE

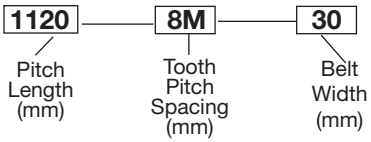

DODGE QD HTD Sprockets

- Rated for capacity of standard HTD belts.
- Compatible for standard HTD belts.
- Can run HT200 belts at HTD rating.
- Use HT200 belts for quieter operation than with HTD belts.

Caution: Standard QD style HTD sprockets manufactured by DODGE or by others may not have the torque capacity for the higher rated HT200 belts. HT TAPER-LOCK sprockets from DODGE are designed to handle the higher loads.

Upgrade Roller Chain Drives to DODGE HT200

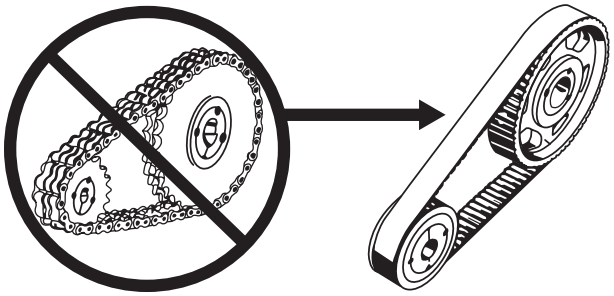

- **Clean:** No lubrication required. No messy oil drips or spills.
- **Quiet:** No metal-to-metal contact.
- **Smooth Operation:** No chordal action of chain drive that results in vibration and speed variation.
- **Economical Drive Guard:** Basic enclosed or ventilated guard will suffice. Oil seals, filler and drain plugs not required.

SPROCKET NOMENCLATURE

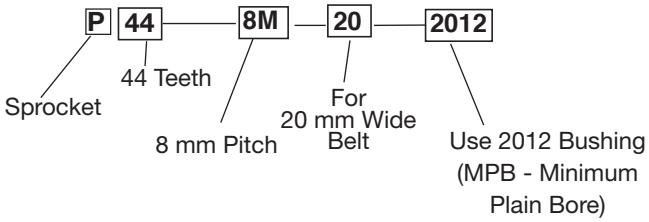

SPECIFICATION

HT TAPER-LOCK Sprockets

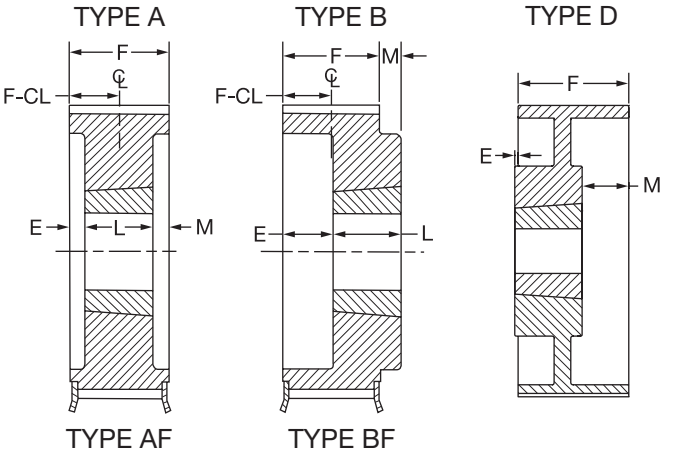

The figure following the sketch reference letter in the "Type" column, indicates the construction of the sprocket (1 = Solid, 2 = Web, and 3 = Arms) and the letter "F indicates that the sprocket has flanges.

5MM Sprockets

Sprocket Number	Part No.	No. Of Teeth	Diameters P.D.	Diameters O.D.	Flange	Type	Dimensions (In.) E	Dimensions (In.) M	Bore Sizes Min.	Bore Sizes Max	Approx. Weight (Lbs.)	Approx. Wr^2 (Lb-Ft^2)
5M-15					**F = 0.89"**							
P32-5M-15-MPB	**112465**	32	2.005	1.960	2.125		0.50	0	1/2	7/8	0.8	0.0016
P34-5M-15-MPB	**112466**	34	2.130	2.085	2.375		0.50	0	1/2	1	0.9	0.0021
P36-5M-15-MPB	**114640**	36	2.256	2.211	2.375		0.50	0	1/2	1-1/8	1.1	0.0028
P36-5M-15-1108	**112467**	36	2.256	2.211	2.375	A1F	0	0	1/2	1-1/8	0.47	0.0028
P38-5M-15-1108	**112468**	38	2.381	2.336	2.613	A1F	0	0	1/2	1-1/8	0.57	0.0036
P40-5M-15-1108	**112469**	40	2.506	2.461	2.733	A1F	0	0	1/2	1-1/8	0.68	0.0047
P44-5M-15-1108	**112470**	44	2.757	2.712	3.090	A1F	0	0	1/2	1-1/8	0.91	0.0072
P48-5M-15-1210	**112471**	48	3.008	2.963	3.328	B1F	0	0.11	1/2	1-1/4	1.0	0.0105
P52-5M-15-1210	**112472**	52	3.258	3.213	3.566	B1F	0	0.11	1/2	1-1/4	1.3	0.0153
P56-5M-15-1610	**112473**	56	3.509	3.464	3.805	B1F	0	0.11	1/2	1-11/16	1.4	0.0192
P60-5M-15-1610	**112474**	60	3.760	3.715	4.044	B1F	0	0.11	1/2	1-11/16	1.7	0.0267
P64-5M-15-1610	**112475**	64	4.010	3.965	4.170	B1F	0	0.11	1/2	1-11/16	2.1	0.0353
P68-5M-15-1610	**112476**	68	4.261	4.216	4.520	B1F	0	0.11	1/2	1-11/16	2.4	0.0458
P72-5M-15-1610	**112477**	72	4.511	4.466	4.670	B1F	0	0.11	1/2	1-11/16	2.8	0.0583
P80-5M-15-1610	**112478**	80	5.013	4.968	. . .	B1	0	0.11	1/2	1-11/16	3.7	0.0906
P90-5M-15-1610	**112479**	90	5.639	5.594	. . .	B1	0	0.11	1/2	1-11/16	4.9	0.1474
P112-5M-15-2012	**112480**	112	7.018	6.973	. . .	B1	0	0.36	1/2	2-1/8	8.3	0.3750
5M-25					**F = 1.28"**							
P32-5M-25-MPB	**112481**	32	2.005	1.960	2.125		0.50	0	1/2	7/8	1.1	0.0024
P34-5M-25-MPB	**112482**	34	2.130	2.085	2.375		0.50	0	1/2	1	1.2	0.0031
P36-5M-25-1108	**112483**	36	2.256	2.211	2.375	A1F	0	0.41	1/2	1-1/8	0.65	0.0039
P38-5M-25-1108	**112484**	38	2.381	2.336	2.613	A1F	0	0.41	1/2	1-1/8	0.73	0.0048
P40-5M-25-1108	**112485**	40	2.506	2.461	2.733	A1F	0	0.41	1/2	1-1/8	0.85	0.0061
P44-5M-25-1108	**112486**	44	2.757	2.712	3.090	A1F	0	0.41	1/2	1-1/8	1.1	0.0091
P48-5M-25-1210	**112487**	48	3.008	2.963	3.328	A1F	0	0.28	1/2	1-1/4	1.2	0.0130
P52-5M-25-1210	**112488**	52	3.258	3.213	3.566	A1F	0	0.28	1/2	1-1/4	1.6	0.0185
P56-5M-25-1610	**112489**	56	3.509	3.464	3.805	A1F	0	0.28	1/2	1-11/16	1.6	0.0240
P60-5M-25-1610	**112490**	60	3.760	3.715	4.044	A1F	0	0.28	1/2	1-11/16	2.1	0.0335
P64-5M-25-1610	**112491**	64	4.010	3.965	4.170	A1F	0	0.28	1/2	1-11/16	2.4	0.0430
P68-5M-25-2012	**112492**	68	4.261	4.216	4.520	A1F	0.03	0.00	1/2	2-1/8	2.7	0.0571
P72-5M-25-2012	**112493**	72	4.511	4.466	4.670	A1F	0.03	0.00	1/2	2-1/8	3.3	0.0751
P80-5M-25-2012	**112494**	80	5.013	4.968	. . .	A1	0.03	0.00	1/2	2-1/8	4.5	0.1215
P90-5M-25-2012	**112495**	90	5.639	5.594	. . .	A1	0.03	0.00	1/2	2-1/8	6.2	0.2032
P112-5M-25-2012	**112496**	112	7.018	6.973	. . .	A1	0.03	0.00	1/2	2-1/8	10.7	0.5102

FEATURES/BENEFITS PAGE PT11-2	SELECTION PAGE PT11-19	ENGINEERING/TECHNICAL PAGE PT11-64

HT TAPER-LOCK Sprockets

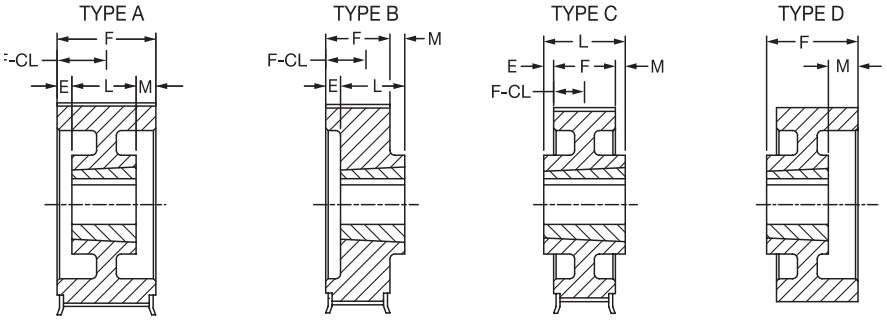

The figure following the sketch reference letter in the "Type" column, indicates the construction of the sprocket (1 = Solid, 2 = Web, and 3 = Arms) and the letter "F indicates that the sprocket has flanges.

8MM Sprockets

Sprocket Number	Part No.	No. Of Teeth	Diameters			Type	Dimensions (In.)		Bore Sizes		Approx. Weight (Lbs.)	Approx. Wr^2 (Lb-Ft^2)
			P.D.	O.D.	Flange		E	M	Min.	Max		
8M-20					**F = 1.13"**							
P22-8M-20-1108*	**112850**	22	2.206	2.152	2.559	A1F	0.00	0.26	1/2	1-1/8	0.5	0.0027
P24-8M-20-1108	**112851**	24	2.406	2.352	2.756	A1F	0.00	0.26	1/2	1-1/8	0.7	0.0044
P26-8M-20-1108	**112852**	26	2.607	2.553	2.953	A1F	0.00	0.26	1/2	1-1/8	0.9	0.0065
P28-8M-20-1108	**112853**	28	2.807	2.753	3.150	A1F	0.26	0.00	1/2	1-1/8	1.2	0.0093
P30-8M-20-1210	**112854**	30	3.008	2.954	3.346	A1F	0.13	0.00	1/2	1-1/4	1.2	0.0116
P32-8M-20-1210	**112855**	32	3.208	3.154	3.543	A1F	0.00	0.13	1/2	1-1/4	1.4	0.0157
P34-8M-20-1610	**112856**	34	3.409	3.355	3.819	A1F	0.13	0.00	1/2	1-11/16	1.4	0.0185
P36-8M-20-1610	**112857**	36	3.609	3.555	3.937	A1F	0.13	0.00	1/2	1-11/16	1.7	0.0246
P38-8M-20-1610	**112858**	38	3.810	3.756	4.134	A1F	0.13	0.00	1/2	1-11/16	2.0	0.0320
P40-8M-20-1610	**112859**	40	4.010	3.956	4.331	A1F	0.13	0.00	1/2	1-11/16	2.4	0.0406
P44-8M-20-2012	**112860**	44	4.411	4.357	4.764	B1F	0.00	0.12	1/2	2-1/8	2.7	0.0585
P48-8M-20-2012	**112861**	48	4.812	4.758	5.157	B1F	0.00	0.12	1/2	2-1/8	3.7	0.0916
P56-8M-20-2012	**112862**	56	5.614	5.560	5.945	B1F	0.00	0.12	1/2	2-1/8	5.6	0.1768
P64-8M-20-2012	**112863**	64	6.416	6.362	6.772	B1F	0.00	0.12	1/2	2-1/8	7.7	0.3075
P72-8M-20-2012	**112864**	72	7.218	7.164	7.598	B1F	0.00	0.12	1/2	2-1/8	10	0.4991
P80-8M-20-2517	**112865**	80	8.020	7.966	8.386	B1F	0.00	0.62	1/2	2-11/16	13	0.7725
P90-8M-20-2517	**112866**	90	9.023	8.969	. . .	C2	0.31	0.31	1/2	2-11/16	12	0.9037
8M-30					**F = 1.5"**							
P22-8M-30-1108*	**112867**	22	2.206	2.152	2.559	A1F	0.00	0.63	1/2	1-1/8	0.64	0.0036
P24-8M-30-1108	**112868**	24	2.406	2.352	2.756	A1F	0.00	0.63	1/2	1-1/8	0.90	0.0058
P26-8M-30-1108	**112869**	26	2.607	2.553	2.953	A1F	0.00	0.63	1/2	1-1/8	1.1	0.0082
P28-8M-30-1108	**112870**	28	2.807	2.753	3.150	A1F	0.00	0.63	1/2	1-1/8	1.5	0.0124
P30-8M-30-1210	**112871**	30	3.008	2.954	3.346	A1F	0.00	0.50	1/2	1-1/4	1.5	0.0152
P32-8M-30-1210	**112872**	32	3.208	3.154	3.543	A1F	0.00	0.50	1/2	1-1/4	1.7	0.0199
P34-8M-30-1610	**112873**	34	3.409	3.355	3.819	A1F	0.00	0.50	1/2	1-11/16	1.8	0.0241
P36-8M-30-1610	**112874**	36	3.609	3.555	3.937	A1F	0.00	0.50	1/2	1-11/16	2.2	0.0323
P38-8M-30-1610	**112875**	38	3.810	3.756	4.134	A1F	0.00	0.50	1/2	1-11/16	2.5	0.0409
P40-8M-30-2012	**112876**	40	4.010	3.956	4.331	A1F	0.00	0.25	1/2	2-1/8	2.3	0.0453
P44-8M-30-2012	**112877**	44	4.411	4.357	4.764	A1F	0.00	0.25	1/2	2-1/8	3.2	0.0712
P48-8M-30-2012	**112878**	48	4.812	4.758	5.157	A1F	0.00	0.25	1/2	2-1/8	4.2	0.1069
P56-8M-30-2012	**112879**	56	5.614	5.560	5.945	A1F	0.00	0.25	1/2	2-1/8	6.3	0.2087
P64-8M-30-2517	**112880**	64	6.416	6.362	6.772	B1F	0.00	0.25	1/2	2-11/16	9.5	0.4044
P72-8M-30-2517	**112881**	72	7.218	7.164	7.598	B1F	0.00	0.25	1/2	2-11/16	13	0.6599
P80-8M-30-2517	**112882**	80	8.020	7.966	8.386	B1F	0.00	0.25	1/2	2-11/16	16	1.019
P90-8M-30-2517	**112883**	90	9.023	8.969	. . .	C2	0.13	0.13	1/2	2-11/16	22	1.650
P112-8M-30-2517	**112884**	112	11.229	11.175	. . .	C2	0.13	0.13	1/2	2-11/16	24	1.764
P144-8M-30-2517	**112849**	114	14.437	14.383	. . .	D3	0.38	0.13	1/2	2-11/16	31	6.014

TAPER-LOCK sprockets limited to torque capacity of bushing.

FEATURES/BENEFITS PAGE PT11-2	SELECTION PAGE PT11-19	ENGINEERING/TECHNICAL PAGE PT11-64	

SPECIFICATION

HT TAPER-LOCK Sprockets

8 MM Sprocket

Sprocket Number	Part No.	No. Of Teeth	Diameters P.D.	Diameters O.D.	Diameters Flange	Type	Dimensions (In.) E	Dimensions (In.) M	Bore Sizes Min.	Bore Sizes Max	Approx. Weight (Lbs.)	Approx. Wr^2 (Lb-Ft^2)
8M-50					**F = 2.38”**							
P28-8M-50-1108*	**112885**	28	2.807	2.753	3.150	A1F	0.00	1.50	1/2	1-1/8	2.1	0.0182
P30-8M-50-1210	**112886**	30	3.008	2.954	3.346	A1F	0.00	1.38	1/2	1-1/4	2.2	0.0231
P32-8M-50-1210	**114821**	32	3.208	3.154	3.543	A1F	0.00	1.38	1/2	1-1/4	2.3	0.0281
P34-8M-50-1610	**114822**	34	3.409	3.355	3.819	A1F	0.00	1.38	1/2	1-11/16	4.0	0.0457
P36-8M-50-1610	**112889**	36	3.609	3.555	3.937	A1F	0.00	1.38	1/2	1-11/16	2.7	0.0431
P38-8M-50-1610	**112890**	38	3.810	3.756	4.134	A1F	0.00	1.38	1/2	1-11/16	3.1	0.0540
P40-8M-50-2012	**112891**	40	4.010	3.956	4.331	A1F	0.00	1.13	1/2	2-1/8	3.5	0.0685
P44-8M-50-2012	**112892**	44	4.411	4.357	4.764	A1F	0.00	1.13	1/2	2-1/8	4.3	0.0999
P48-8M-50-2012	**112893**	48	4.812	4.758	5.157	A1F	0.00	1.13	1/2	2-1/8	5.5	0.1491
P56-8M-50-2517	**112894**	56	5.614	5.560	5.945	A1F	0.00	0.63	1/2	2-11/16	8.1	0.2957
P64-8M-50-2517	**112895**	64	6.416	6.362	6.772	A1F	0.00	0.63	1/2	2-11/16	12	0.5272
P72-8M-50-2517	**112896**	72	7.218	7.164	7.598	A1F	0.00	0.63	1/2	2-11/16	16	0.8625
P80-8M-50-2517	**112897**	80	8.020	7.966	8.386	A1F	0.00	0.63	1/2	2-11/16	20	1.343
P90-8M-50-3020	**112898**	90	9.023	8.969	. . .	A1	0.00	0.38	7/8	3-1/4	27	2.277
P112-8M-50-3020	**112899**	112	11.229	11.175	. . .	A2	0.00	0.38	7/8	3-1/4	30	3.746
P144-8M-50-3020	**114833**	144	14.437	14.383	. . .	A3	0.00	0.38	7/8	3-1/4	49	8.988
P192-8M-50-3020	**112901**	192	19.249	19.195	. . .	A3	0.00	0.38	7/8	3-1/4	108	32.21
8M-85					**F = 3.75”**							
P34-8M-85-1615	**114823**	34	3.409	3.355	3.810	A1F	0.75	1.50	1/2	1-11/16	3.9	0.0547
P36-8M-85-1615	**114825**	36	3.609	3.555	4.009	A1F	0.75	1.50	1/2	1-11/16	4.4	0.0694
P40-8M-85-2012	**114828**	40	4.010	3.956	4.410	A1F	1.25	1.25	1/2	2-1/8	4.7	0.0970
P44-8M-85-2012	**114504**	44	4.411	4.357	4.764	A1F	1.25	1.25	1/2	2-1/8	5.9	0.1447
P48-8M-85-2012	**114505**	48	4.812	4.758	5.212	A1F	1.25	1.25	1/2	2-1/8	7.6	0.2146
P56-8M-85-2517	**114506**	56	5.614	5.560	6.014	A1F	0.81	1.19	1/2	2-11/16	11	0.4058
P64-8M-85-2517	**114507**	64	6.416	6.362	6.716	A1F	0.59	1.41	1/2	2-11/16	15	0.6987
P72-8M-85-3020	**114508**	72	7.218	7.164	7.500	A1F	0.88	0.88	7/8	3-1/4	18	1.121
P80-8M-85-3020	**114509**	80	8.020	7.966	8.420	A1F	0.50	1.25	7/8	3-1/4	22	1.642
P90-8M-85-3020	**114510**	90	9.023	8.969	. . .	A1	0.50	1.25	7/8	3-1/4	32	2.846
P112-8M-85-3020	**114511**	112	11.229	11.175	. . .	A2	0.50	1.25	7/8	3-1/4	33	4.621
P144-8M-85-3535	**114834**	144	14.437	14.383	. . .	A3	0.00	0.25	1-3/16	3-15/16	54	11.06
P192-8M-85-3535	**114513**	192	19.249	19.195	. . .	A3	0.13	0.13	1-3/16	3-15/16	125	39.63

14 MM Sprockets

Sprocket Number	Part No.	No. Of Teeth	Diameters P.D.	Diameters O.D.	Diameters Flange	Type	Dimensions (In.) E	Dimensions (In.) M	Bore Sizes Min.	Bore Sizes Max	Approx. Weight (Lbs.)	Approx. Wr^2 (Lb-Ft^2)
14M-40					**F = 2.13”**							
P28-14M-40-2012*	**112902**	28	4.912	4.802	5.560	A1F	0.00	0.88	1/2	2-1/8	5.9	0.1531
P29-14M-40-2012	**112903**	29	5.088	4.978	5.560	A1F	0.00	0.88	1/2	2-1/8	6.6	0.1810
P30-14M-40-2012	**112904**	30	5.263	5.153	6.125	A1F	0.00	0.88	1/2	2-1/8	6.5	0.1935
P32-14M-40-2012	**112905**	32	5.614	5.504	6.125	A1F	0.00	0.88	1/2	2-1/8	8.0	0.2651
P34-14M-40-2012	**112906**	34	5.965	5.855	6.500	A1F	0.00	0.88	1/2	2-1/8	9.4	0.3498
P36-14M-40-2517	**112907**	36	6.316	6.206	6.875	A1F	0.00	0.38	1/2	2-11/16	11	0.4443
P38-14M-40-2517	**112908**	38	6.667	6.557	7.219	A1F	0.00	0.38	1/2	2-11/16	12	0.5658
P40-14M-40-2517	**112909**	40	7.018	6.908	7.500	A1F	0.00	0.38	1/2	2-11/16	14	0.7134
P44-14M-40-2517	**112910**	44	7.720	7.610	8.343	A1F	0.00	0.38	1/2	2-11/16	18	1.046
P48-14M-40-2517	**112911**	48	8.421	8.311	8.937	A1F	0.00	0.38	1/2	2-11/16	22	1.527
P52-14M-40-2517	**112912**	52	9.123	9.013	9.687	A1F	0.00	0.38	1/2	2-11/16	26	2.126
P56-14M-40-2517	**112913**	56	9.825	9.715	10.375	A1F	0.00	0.38	1/2	2-11/16	31	2.878
P60-14M-40-3020	**112914**	60	10.527	10.417	11.062	A2F	0.00	0.13	7/8	3-1/4	29	3.177
P64-14M-40-3020	**112915**	64	11.229	11.119	11.750	A2F	0.00	0.13	7/8	3-1/4	31	3.872
P68-14M-40-3020	**112916**	68	11.930	11.820	12.500	A2F	0.00	0.13	7/8	3-1/4	31	4.446
P72-14M-40-3020	**112917**	72	12.632	12.522	13.187	A2F	0.00	0.13	7/8	3-1/4	34	5.410
P80-14M-40-3020	**114840**	80	14.036	13.926	14.625	A3F	0.00	0.13	7/8	3-1/4	34	7.474
P90-14M-40-3020	**114851**	90	15.790	15.680	. . .	A3	0.00	0.13	7/8	3-1/4	40	9.396
P112-14M-40-3020	**114470**	112	19.650	19.540	. . .	A3	0.00	0.13	7/8	3-1/4	101	29.66
P144-14M-40-3020	**114471**	144	25.264	25.154	. . .	A3	0.00	0.13	7/8	3-1/4	154	75.16
P168-14M-40-3020	**114852**	168	29.475	29.265	. . .	A3	0.00	0.13	7/8	3-1/4	133	113.3
P192-14M-40-3020	**114853**	192	33.686	33.576	. . .	A3	0.00	0.13	7/8	3-1/4	168	189.8

FEATURES/BENEFITS PAGE PT11-2 | SELECTION PAGE PT11-19 | ENGINEERING/TECHNICAL PAGE PT11-64

HT TAPER-LOCK Sprockets

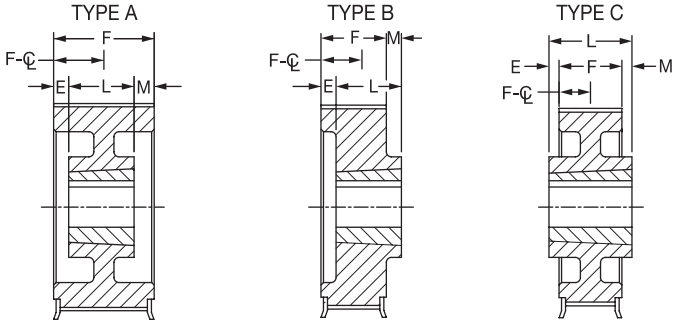

TYPE AF TYPE BF TYPE CF

The figure following the sketch reference letter in the "Type" column indicates the construction of the sprocket (1 = Solid, 2 = Web and 3 = Arms), and the letter "F" indicates that the sprocket has flanges.

14MM Sprockets

Sprocket Number	Part No.	No. Of Teeth	Diameters P.D.	Diameters O.D.	Diameters Flange	Type	Dimensions (In.) E	Dimensions (In.) M	Bore Sizes Min.	Bore Sizes Max	Approx. Weight (Lbs.)	Approx. Wr^2 (Lb-Ft^2)
14M-55					**F = 2.75"**							
P28-14M-55-2012	**112922**	28	4.912	4.802	5.560	A1F	0.00	1.50	1/2	2-1/8	7.4	0.1948
P29-14M-55-2012	**112923**	29	5.088	4.978	5.560	A1F	0.00	1.50	1/2	2-1/8	8.4	0.2314
P30-14M-55-2517	**114836**	30	5.263	5.153	6.125	A1F	0.00	1.00	1/2	2-11/16	7.4	0.2371
P32-14M-55-2517	**112925**	32	5.614	5.504	6.125	A1F	0.00	1.00	1/2	2-11/16	9.3	0.3276
P34-14M-55-2517	**112926**	34	5.965	5.855	6.500	A1F	0.00	1.00	1/2	2-11/16	11	0.4379
P36-14M-55-2517	**112927**	36	6.316	6.206	6.875	A1F	0.00	1.00	1/2	2-11/16	12	0.5400
P38-14M-55-2517	**112928**	38	6.667	6.557	7.219	A1F	0.00	1.00	1/2	2-11/16	14	0.6868
P40-14M-55-2517	**112929**	40	7.018	6.908	7.500	A1F	0.00	1.00	1/2	2-11/16	17	0.8719
P44-14M-55-2517	**112930**	44	7.720	7.610	8.343	A1F	0.00	1.00	1/2	2-11/16	20	1.234
P48-14M-55-3020	**112931**	48	8.421	8.311	8.937	A1F	0.00	0.75	7/8	3-1/4	24	1.840
P52-14M-55-3020	**112932**	52	9.123	9.013	9.687	A1F	0.00	0.75	7/8	3-1/4	30	2.573
P56-14M-55-3020	**112933**	56	9.825	9.715	10.375	A1F	0.00	0.75	7/8	3-1/4	35	3.489
P60-14M-55-3020	**112934**	60	10.527	10.417	11.062	A1F	0.00	0.75	7/8	3-1/4	42	4.647
P64-14M-55-3020	**112935**	64	11.229	11.119	11.750	A1F	0.00	0.75	7/8	3-1/4	48	6.012
P68-14M-55-3020	**112936**	68	11.930	11.820	12.500	A2F	0.00	0.75	7/8	3-1/4	40	5.909
P72-14M-55-3020	**112937**	72	12.632	12.522	13.187	A2F	0.00	0.75	7/8	3-1/4	45	7.387
P80-14M-55-3020	**114841**	80	14.036	13.926	14.625	A3F	0.00	0.75	7/8	3-1/4	42	9.021
P90-14M-55-3020	**114859**	90	15.790	15.680	. . .	A3	0.00	0.75	7/8	3-1/4	45	12.36
P112-14M-55-3020	**114472**	112	19.650	19.540	. . .	A3	0.00	0.75	7/8	3-1/4	117	36.86
P144-14M-55-3020	**114854**	144	25.264	25.154	. . .	A3	0.00	0.75	7/8	3-1/4	98	65.38
P168-14M-55-3020	**114860**	168	29.475	29.265	. . .	A3	0.19	0.56	7/8	3-1/4	146	150.2
P192-14M-55-3535	**114755**	192	33.686	33.576	. . .	C3	0.00	0.75	1-3/16	3-15/16	432	404.3
14M-85					**F = 4"**							
P28-14M-85-2012*	**112944**	28	4.912	4.802	5.560	A1F	1.31	1.44	1/2	2-1/8	10	0.2787
P29-14M-85-2012*	**112945**	29	5.088	4.978	5.560	A1F	1.31	1.44	1/2	2-1/8	12	0.3321
P30-14M-85-2517	**114837**	30	5.263	5.153	6.125	A1F	0.50	1.75	1/2	2-11/16	10	0.3326
P32-14M-85-2517	**112947**	32	5.614	5.504	6.125	A1F	0.81	1.44	1/2	2-11/16	13	0.4590
P34-14M-85-2517	**112948**	34	5.965	5.855	6.500	A1F	0.81	1.44	1/2	2-11/16	15	0.6143
P36-14M-85-3020	**112949**	36	6.316	6.206	6.875	A1F	0.53	1.47	7/8	3-1/4	14	0.6948
P38-14M-85-3020	**112950**	38	6.667	6.557	7.219	A1F	0.53	1.47	7/8	3-1/4	17	0.8975
P40-14M-85-3020	**112951**	40	7.018	6.908	7.500	A1F	0.53	1.47	7/8	3-1/4	20	1.161
P44-14M-85-3020	**112952**	44	7.720	7.610	8.343	A1F	0.53	1.47	7/8	3-1/4	24	1.615
P48-14M-85-3020	**112953**	48	8.421	8.311	8.937	A1F	0.53	1.47	7/8	3-1/4	31	2.432
P52-14M-85-3535	**112954**	52	9.123	9.013	9.687	A1F	0.00	0.50	1-3/16	3-15/16	37	3.356
P56-14M-85-3535	**112955**	56	9.825	9.715	10.375	A1F	0.00	0.50	1-3/16	3-15/16	52	5.300
P60-14M-85-3535	**112956**	60	10.527	10.417	11.062	A1F	0.00	0.50	1-3/16	3-15/16	63	7.128
P64-14M-85-3535	**112957**	64	11.229	11.119	11.750	A1F	0.00	0.50	1-3/16	3-15/16	74	9.334
P68-14M-85-3535	**112958**	68	11.930	11.820	12.500	A2F	0.00	0.50	1-3/16	3-15/16	63	9.169
P72-14M-85-3535	**112959**	72	12.632	12.522	13.187	A1F	0.00	0.50	1-3/16	3-15/16	97	15.19
P80-14M-85-3535	**112960**	80	14.036	13.926	14.625	A2F	0.00	0.50	1-3/16	3-15/16	63	13.04
P90-14M-85-3535	**114474**	90	15.790	15.680	. . .	A2	0.00	0.50	1-3/16	3-15/16	72	18.14
P112-14M-85-3535	**114844**	112	19.650	19.540	. . .	A3	0.00	0.50	1-3/16	3-15/16	131	44.18
P144-14M-85-4040	**114855**	144	25.264	25.154	. . .	A3	0.00	0.00	1-7/16	4-7/16	137	92.10
P168-14M-85-4040	**114489**	168	29.475	29.265	. . .	A3	0.00	0.00	1-7/16	4-7/16	192	194.5
P192-14M-85-4040	**114850**	192	33.686	33.576	. . .	A3	0.00	0.00	1-7/16	4-7/16	448	444.6

TAPER-LOCK Sprockets limited to torque capacity of bushing.

FEATURES/BENEFITS PAGE PT11-2 | SELECTION PAGE PT11-19 | ENGINEERING/TECHNICAL PAGE PT11-64

SPECIFICATION

HT TAPER-LOCK Sprockets

14MM Sprockets

Sprocket Number	Part No.	No. Of Teeth	Diameters P.D.	Diameters O.D.	Diameters Flange	Type	Dimensions (In.) E	Dimensions (In.) M	Bore Sizes Min.	Bore Sizes Max	Approx. Weight (Lbs.)	Approx. Wr^2 (Lb-Ft^2)
14M-115					**F = 5.25”**							
P30-14M-115-2517	**114838**	30	5.263	5.153	5.763	A1F	1.75	1.75	1/2	2-11/16	13	0.4386
P32-14M-115-2517	**114517**	32	5.614	5.504	6.114	A1F	1.75	1.75	1/2	2-11/16	16	0.5873
P34-14M-115-2517	**114518**	34	5.965	5.855	6.465	A1F	1.75	1.75	1/2	2-11/16	19	0.7908
P36-14M-115-3020	**114519**	36	6.316	6.206	6.816	A1F	1.63	1.63	7/8	3-1/4	18	0.8766
P38-14M-115-3020	**114494**	38	6.667	6.557	7.167	A1F	1.63	1.63	7/8	3-1/4	20	1.100
P40-14M-115-3020	**114475**	40	7.018	6.908	7.518	A1F	1.63	1.63	7/8	3-1/4	23	1.357
P44-14M-115-3535	**114522**	44	7.720	7.610	8.395	A1F	0.88	0.88	1-3/16	3-15/16	30	2.144
P48-14M-115-3535	**114523**	48	8.421	8.311	8.941	A1F	0.88	0.88	1-3/16	3-15/16	40	3.277
P52-14M-115-4040	**114524**	52	9.123	9.013	9.687	A1F	0.63	0.63	1-7/16	4-7/16	47	4.545
P56-14M-115-4040	**114525**	56	9.825	9.715	10.355	A1F	0.63	0.63	1-7/16	4-7/16	58	6.335
P60-14M-115-4040	**114526**	60	10.527	10.417	11.067	A1F	0.63	0.63	1-7/16	4-7/16	70	8.589
P64-14M-115-4545	**114527**	64	11.229	11.119	11.750	A1F	0.38	0.38	1-15/16	4-15/16	82	11.47
P68-14M-115-4545	**114528**	68	11.930	11.820	12.500	A1F	0.38	0.38	1-15/16	4-15/16	97	14.91
P72-14M-115-4545	**114529**	72	12.632	12.522	13.066	A1F	0.00	0.75	1-15/16	4-15/16	113	19.06
P80-14M-115-4545	**114530**	80	14.036	13.926	14.620	A2F	0.38	0.38	1-15/16	4-15/16	148	29.66
P90-14M-115-4545	**114476**	90	15.790	15.680	. . .	A2	0.38	0.38	1-15/16	4-15/16	117	28.30
P112-14M-115-4545	**114477**	112	19.650	19.540	. . .	A2	0.00	0.75	1-15/16	4-15/16	173	64.72
P144-14M-115-4545	**114856**	144	25.264	25.154	. . .	A3	0.38	0.38	1-15/16	4-15/16	120	172.2
P168-14M-115-4545	**114848**	168	29.475	29.265	. . .	A3	0.38	0.38	1-15/16	4-15/16	223	243.3
P192-14M-115-4545	**114482**	192	33.686	33.576	. . .	A3	0.38	0.38	1-15/16	4-15/16	475	496.5
P216-14M-115-6050	**114857**	216	37.896	37.786	. . .	A3	0.00	0.25	4-7/16	6	686	378.0
14M-170					**F = 7.38”**							
P40-14M-170-3535*	**114539**	40	7.018	6.908	7.518	A1F	1.94	1.94	1-3/16	3-15/16	29	1.780
P44-14M-170-3535	**114540**	44	7.720	7.610	8.395	A1F	1.94	1.94	1-3/16	3-15/16	39	2.828
P48-14M-170-3535	**114541**	48	8.421	8.311	8.941	A1F	1.94	1.94	1-3/16	3-15/16	51	4.283
P52-14M-170-4040	**114542**	52	9.123	9.013	9.687	A1F	1.13	2.25	1-7/16	4-7/16	59	5.877
P56-14M-170-4040	**114543**	56	9.825	9.715	10.355	A1F	1.13	2.25	1-7/16	4-7/16	71	8.051
P60-14M-170-4545	**114544**	60	10.527	10.417	11.067	A1F	0.75	2.13	1-15/16	4-15/16	83	10.85
P64-14M-170-4545	**114545**	64	11.229	11.119	11.750	A1F	0.63	2.25	1-15/16	4-15/16	94	13.71
P68-14M-170-4545	**114546**	68	11.930	11.820	12.500	A1F	0.63	2.25	1-15/16	4-15/16	113	18.15
P72-14M-170-4545	**114547**	72	12.632	12.522	13.066	A1F	0.63	2.25	1-15/16	4-15/16	130	23.00
P80-14M-170-4545	**114548**	80	14.036	13.926	14.625	A1F	1.03	1.84	1-15/16	4-15/16	166	35.12
P90-14M-170-4545	**114478**	90	15.790	15.680	. . .	A2	0.63	2.25	1-15/16	4-15/16	159	42.03
P112-14M-170-4545	**114479**	112	19.650	19.540	. . .	D2	0.25	3.12	1-15/16	4-15/16	215	81.30
P144-14M-170-6050	**114858**	144	25.264	25.154	. . .	A3	1.19	1.19	4-7/16	6	264	207.9
P168-14M-170-6050	**114499**	168	29.475	29.265	. . .	A3	1.19	1.19	4-7/16	6	462	384.2
P192-14M-170-6050	**117846**	192	33.686	33.576	. . .	A3	1.19	1.19	4-7/16	6	616	655.7
P216-14M-170-6050	**117848**	216	37.896	37.786	. . .	A2	1.19	1.19	4-7/16	6	563	851.7

FEATURES/BENEFITS PAGE PT11-2 | SELECTION PAGE PT11-19 | ENGINEERING/TECHNICAL PAGE PT11-64

SPECIFICATION

HT Sprockets

TYPE 6

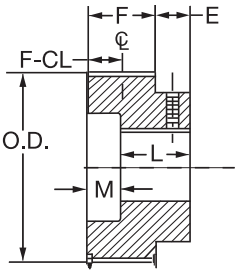

TYPE 6F

TYPE A

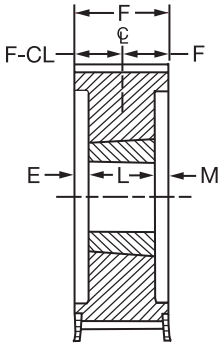

TYPE AF

Plain Bore HT Sprockets

Sprocket Number	Part No.	No. Of Teeth	Diameters			Dimensions (Inches)			Bore Range		Approx. Weight (Lbs.)	Approx. Wr^2 (Lb-Ft^2)
			Pitch	O.D.	Flange	E	L	M	Min.	Max		
			8 MM	**Pitch**							**Type 6F**	
P22-8M-20-MPB	**110700**	22	2.206	2.152	2.606	0.60	1.80	0.00	1/2	1-3/16	1.3	0.0048
P22-8M-30-MPB	**110720**	22	2.206	2.152	2.606	0.60	2.10	0.00	1/2	1-3/16	1.6	0.0060
P24-8M-30-MPB	**110721**	24	2.406	2.352	2.756	0.60	2.10	0.00	1/2	1-1/4	1.9	0.0061
P26-8M-30-MPB	**110722**	26	2.607	2.553	2.906	0.80	2.30	0.00	1/2	1-1/4	2.4	0.0087
P28-8M-50-MPB	**114484**	28	2.807	2.753	3.207	0.60	2.50	0.50	1/2	1-1/2	3.7	0.0240
P30-8M-50-MPB	**110741**	30	3.008	2.954	3.346	0.60	2.50	0.50	1/2	1-1/2	4.3	0.0319
P38-8M-85-MPB	**114827**	38	3.810	3.756	4.201	0.60	3.30	1.10	1/2	1-7/8	9.7	0.1204
			14 MM	**Pitch**							**Type 6F**	
P28-14M-85-MPB	**110830**	28	4.912	4.802	5.562	1.00	4.00	1.00	1-1/4	2-11/16	17	0.3128
P29-14M-85-MPB	**110831**	29	5.088	4.978	5.562	1.00	4.00	1.00	1-1/4	2-11/16	19	0.3654
P28-14M-115-MPB	**110855**	28	4.912	4.802	5.562	1.30	5.00	1.50	1-1/4	2-11/16	22	0.4077
P29-14M-115-MPB	**110856**	29	5.088	4.978	5.562	1.30	5.00	1.50	1-1/4	2-11/16	24	0.4768
P36-14M-170-MPB	**110880**	36	6.316	6.206	6.816	1.30	6.00	2.60	1-1/2	3-3/8	47	1.593
P38-14M-170-MPB	**110881**	38	6.667	6.557	7.167	1.30	6.00	2.60	1-1/2	3-3/8	54	1.987
P40-14M-170-MPB	**110882**	40	7.018	6.908	7.518	1.30	6.00	2.60	1-1/2	3-3/4	60	2.479

Fin-Fan Sprockets For Cooling Tower Drives

TAPER-LOCK			**14 MM**	**Pitch**							**Type A**	
P168-14M-40-3020	**114852**	168	29.475	29.265	. . .	0.00	2.00	0.10	7/8	3-1/4	133	113.3
P192-14M-40-3020	**114853**	192	33.686	33.576	. . .	0.00	2.00	0.10	7/8	3-1/4	168	189.8
P168-14M-55-3020	**114860**	168	29.475	29.265	. . .	0.00	2.00	0.80	7/8	3-1/4	146	150.2
F192-14M-55-3020	**114993**	192	33.686	33.576	. . .	0.00	2.00	0.80	7/8	3-1/4	162	170.9
F216-14M-55-3020	**114994**	216	37.896	37.786	. . .	0.00	2.00	0.80	7/8	3-1/4	195	254.6
QD			**14 MM**	**Pitch**							**Type A**	
F168-14M-55-E	**114375**	168	29.475	29.265	. . .	0.60	1.60	0.60	7/8	3-1/2	151.7	102.6
F192-14M-55-E	**114376**	192	33.686	33.576	. . .	0.60	1.60	0.60	7/8	3-1/2	127.8	143.5
F144-14M-85-E	**114377**	144	25.262	25.154	. . .	0.60	1.60	1.20	7/8	3-1/2	140.3	77.97
F168-14M-85-E	**114378**	168	29.475	29.265	. . .	0.00	1.60	1.20	7/8	3-1/2	175.1	129.5
F192-14M-85-E	**114379**	192	33.686	33.576	. . .	0.00	1.60	1.20	7/8	3-1/2	183.0	210.5
F216-14M-85-E	**114380**	216	37.896	37.786	. . .	0.00	1.60	1.20	7/8	3-1/2	218.1	288.9

FEATURES/BENEFITS PAGE PT11-2 | SELECTION PAGE PT11-19 | ENGINEERING/TECHNICAL PAGE PT11-64

SPECIFICATION

QD HTD Sprockets

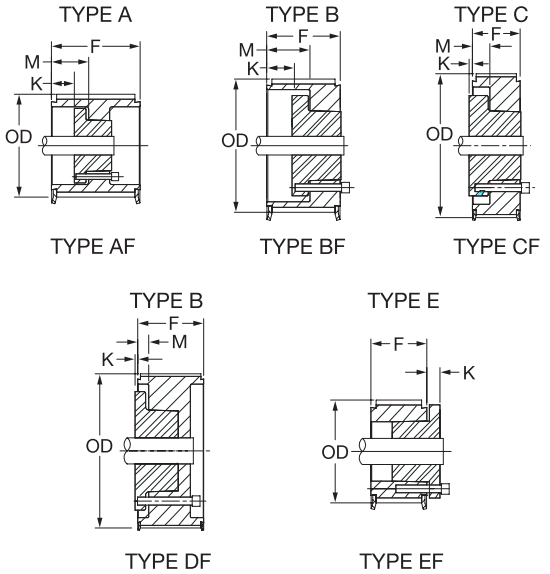

The figure following the sketch reference letter in the "Type" column indicates the construction of the sprocket (1 = Solid, 2 = Web, and 3 = Arms), and the letter "F" indicates that the sprocket has flanges.

5MM QD HTD Sprockets

Sprocket Number	Part No.	No. Of Teeth	Diameters			Type	Dimensions (In.)		Bore Sizes		Approx. Weight (Lbs.)	Approx. Wr^2 (Lb-Ft^2)
			P.D.	O.D.	Flange		M	K	Min.	Max		
5M-15					**F=0.89"**							
P38-5M-15-JA	**114641**	38	2.381	2.336	2.613	E1F	0.00	0.51	1/2	1-1/4	0.6	0.0030
P40-5M-15-JA	**114642**	40	2.506	2.461	2.733	E1F	0.00	0.51	1/2	1-1/4	0.7	0.0039
P44-5M-15-JA	**114643**	44	2.757	2.712	3.090	E1F	0.00	0.51	1/2	1-1/4	0.9	0.0061
P48-5M-15-JA	**114644**	48	3.008	2.963	3.328	D1F	0.31	0.20	1/2	1-1/4	0.9	0.0076
P52-5M-15-JA	**114645**	52	3.258	3.213	3.566	D1F	0.31	0.20	1/2	1-1/4	1.1	0.0106
P56-5M-15-SH	**114646**	56	3.509	3.464	3.805	E1F	0.00	0.68	1/2	1-11/16	1.5	0.0169
P60-5M-15-SH	**114647**	60	3.760	3.715	4.044	E1F	0.00	0.68	1/2	1-11/16	1.8	0.0233
P64-5M-15-SH	**114648**	64	4.010	3.965	4.170	E1F	0.00	0.68	1/2	1-11/16	2.1	0.0312
P68-5M-15-SDS	**114649**	68	4.261	4.216	4.520	D1F	0.14	0.56	1/2	2	2.1	0.0369
P72-5M-15-SDS	**114650**	72	4.511	4.466	4.670	D1F	0.14	0.56	1/2	2	2.4	0.0463
P80-5M-15-SDS	**114651**	80	5.013	4.968	. . .	C1	0.14	0.56	1/2	2	3.1	0.0732
P90-5M-15-SDS	**114652**	90	5.639	5.594	. . .	C1	0.14	0.56	1/2	2	4.1	0.1204
P112-5M-15-SDS	**114653**	112	7.018	6.973	. . .	C1	0.14	0.56	1/2	2	6.9	0.3033
5M-25					**F=1.28"**							
P38-5M-25-JA	**114655**	38	2.381	2.336	2.613	E1F	0.00	0.51	1/2	1-1/4	0.9	0.0043
P40-5M-25-JA	**114656**	40	2.506	2.461	2.733	E1F	0.00	0.51	1/2	1-1/4	1.0	0.0056
P44-5M-25-JA	**114657**	44	2.757	2.712	3.090	E1F	0.00	0.51	1/2	1-1/4	1.3	0.0088
P48-5M-25-JA	**114658**	48	3.008	2.963	3.328	B1F	0.72	0.21	1/2	1-1/4	1.1	0.0097
P52-5M-25-JA	**114659**	52	3.258	3.213	3.566	B1F	0.72	0.21	1/2	1-1/4	1.3	0.0133
P56-5M-25-SH	**114660**	56	3.509	3.464	3.805	C1F	0.47	0.21	1/2	1-11/16	1.7	0.0206
P60-5M-25-SH	**114661**	60	3.760	3.715	4.044	C1F	0.47	0.21	1/2	1-11/16	2.1	0.0285
P64-5M-25-SH	**114662**	64	4.010	3.965	4.170	C1F	0.47	0.21	1/2	1-11/16	2.4	0.0379
P68-5M-25-SDS	**114663**	68	4.261	4.216	4.520	C1F	0.53	0.17	1/2	2	2.6	0.0479
P72-5M-25-SDS	**114664**	72	4.511	4.466	4.670	C1F	0.53	0.17	1/2	2	2.8	0.0564
P80-5M-25-SDS	**114665**	80	5.013	4.968	. . .	C1	0.53	0.17	1/2	2	3.6	0.0875
P90-5M-25-SDS	**114666**	90	5.639	5.594	. . .	C1	0.53	0.17	1/2	2	4.7	0.1414
P112-5M-25-SDS	**114667**	112	7.018	6.973	. . .	C1	0.53	0.17	1/2	2	7.7	0.3595

FEATURES/BENEFITS PAGE PT11-2
SELECTION PAGE PT11-19
ENGINEERING/TECHNICAL PAGE PT11-64

QD HTD Sprockets

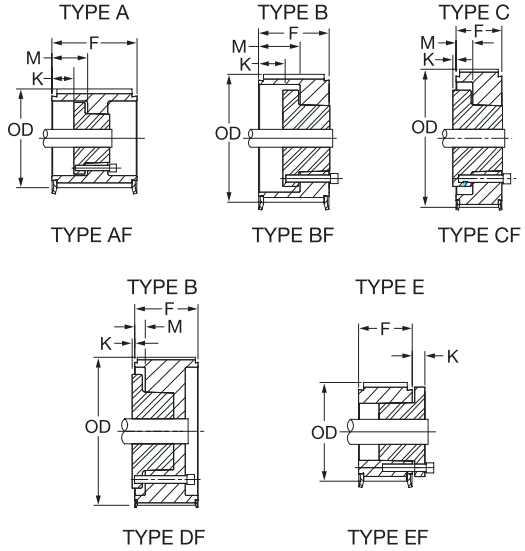

The figure following the sketch reference letter in the "Type" column indicates the construction of the sprocket (1 = Solid, 2 = Web, and 3 = Arms), and the letter "F" indicates that the sprocket has flanges.

8MM QD HTD Sprockets

Sprocket Number	Part No.	No. Of Teeth	Diameters			Type	Dimensions (In.)		Bore Sizes		Approx. Weight (Lbs.)	Approx. Wr^2 (Lb-Ft^2)
			P.D.	O.D.	Flange		M	K	Min.	Max		
8M-20						**F = 1.125"**						
P24-8M-20-JA	**110701**	24	2.406	2.352	2.756	E1F	0.00	0.51	1/2	1-1/4	0.8	0.0039
P26-8M-20-JA	**110702**	26	2.607	2.553	2.906	E1F	0.00	0.51	1/2	1-1/4	1.0	0.0059
P28-8M-20-QT	**110703**	28	2.807	2.759	3.207	E1F	0.00	1.42	3/8	1-1/2	1.1	0.0078
P30-8M-20-QT	**110704**	30	3.008	2.958	3.408	E1F	0.00	1.42	3/8	1-1/2	1.3	0.0110
P32-8M-20-QT	**110705**	32	3.208	3.156	3.608	E1F	0.00	1.42	3/8	1-1/2	1.6	0.0148
P34-8M-20-SH	**110706**	34	3.409	3.355	3.810	E1F	0.00	0.68	1/2	1-11/16	1.6	0.0181
P36-8M-20-SH	**110707**	36	3.609	3.555	4.009	C1F	0.31	0.37	1/2	1-11/16	1.7	0.0213
P38-8M-20-SH	**110708**	38	3.810	3.756	4.210	C1F	0.31	0.37	1/2	2	2.0	0.0272
P40-8M-20-SH	**110709**	40	4.010	3.956	4.410	C1F	0.31	0.37	1/2	2	2.3	0.0353
P44-8M-20-SDS	**110710**	44	4.411	4.357	4.764	C1F	0.38	0.32	1/2	2	2.6	0.0490
P48-8M-20-SDS	**110711**	48	4.812	4.758	5.212	C1F	0.38	0.32	1/2	2	3.4	0.0771
P56-8M-20-SDS	**110712**	56	5.614	5.560	6.014	C1F	0.38	0.32	1/2	2	4.6	0.1370
P64-8M-20-SDS	**110713**	64	6.416	6.362	6.716	C1F	0.38	0.32	1/2	2	6.8	0.2639
P72-8M-20-SDS	**110714**	72	7.218	7.164	7.500	C1F	0.38	0.32	1/2	2	8.8	0.4298
P80-8M-20-SDS	**110715**	80	8.020	7.966	8.420	C1F	0.38	0.32	1/2	2	11	0.6433
P90-8M-20-SDS	**110716**	90	9.023	8.969	. . .	C2	0.38	0.32	1/2	2	12	0.9369
8M-30						**F = 1.5"**						
P28-8M-30-QT	**110723**	28	2.807	2.759	3.207	E1F	0.00	0.37	1/2	1-1/2	1.4	0.0104
P30-8M-30-QT	**110724**	30	3.008	2.958	3.408	E1F	0.00	0.37	3/8	1-1/2	1.8	0.0146
P32-8M-30-QT	**110725**	32	3.208	3.156	3.608	E1F	0.00	0.37	3/8	1-1/2	2.1	0.0197
P34-8M-30-SH	**110726**	34	3.409	3.355	3.810	B1F	0.69	0.01	1/2	1-11/16	1.6	0.0186
P36-8M-30-SH	**110727**	36	3.609	3.555	4.009	B1F	0.69	0.01	1/2	1-11/16	2.0	0.0259
P38-8M-30-SH	**110728**	38	3.810	3.756	4.210	B1F	0.69	0.01	1/2	1-11/16	2.3	0.0328
P40-8M-30-SH	**110729**	40	4.010	3.956	4.410	B1F	0.69	0.01	1/2	1-11/16	2.8	0.0435
P44-8M-30-SDS	**110730**	44	4.411	4.357	4.764	B1F	0.75	0.05	1/2	2	3.0	0.0595
P48-8M-30-SDS	**110731**	48	4.812	4.758	5.212	B1F	0.75	0.05	1/2	2	3.8	0.0880
P56-8M-30-SDS	**110732**	56	5.614	5.560	6.014	B1F	0.75	0.05	1/2	2	5.2	0.1633
P64-8M-30-SK	**110733**	64	6.416	6.362	6.716	C1F	0.25	0.64	1/2	2-5/8	8.6	0.3421
P72-8M-30-SK	**110734**	72	7.218	7.164	7.500	C1F	0.25	0.64	1/2	2-5/8	12	0.5710
P80-8M-30-SK	**110735**	80	8.020	7.966	8.420	C2	0.25	0.64	1/2	2-5/8	11	0.6487
P90-8M-30-SK	**110736**	90	9.023	8.969	. . .	C2	0.25	0.64	1/2	2-5/8	16	1.2862
P112-8M-30-SK	**110737**	112	11.229	11.175	. . .	C2	0.25	0.64	1/2	2-5/8	22	2.703

FEATURES/BENEFITS PAGE PT11-2
SELECTION PAGE PT11-19
ENGINEERING/TECHNICAL PAGE PT11-64

SPECIFICATION

QD HTD Sprockets

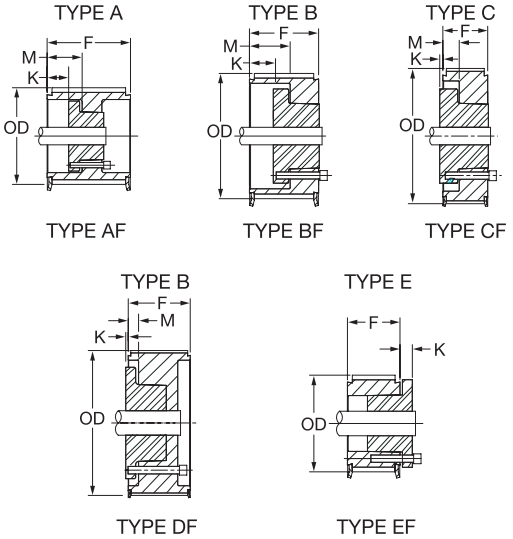

The figure following the sketch reference letter in the "Type" column indicates the construction of the sprocket (1 = Solid, 2 = Web, and 3 = Arms), and the letter "F" indicates that the sprocket has flanges.

8MM QD HTD Sprockets

Sprocket Number	Part No.	No. Of Teeth	Diameters			Type	Dimensions (In.)		Bore Sizes		Approx. Weight (Lbs.)	Approx. Wr^2 (Lb-Ft^2)
			P.D.	O.D.	Flange		M	K	Min.	Max		
8M-50					**F = 2.38"**							
P28-8M-50-JA	**110738**	28	2.807	2.759	3.207	A1F	0.81	0.30	1/2	1-1/4	1.7	0.0127
P30-8M-50-JA	**110739**	30	3.008	2.958	3.408	A1F	0.81	0.30	1/2	1-1/4	1.9	0.0172
P32-8M-50-QT	**110742**	32	3.208	3.156	3.608	A1F	0.81	0.30	3/8	1-1/2	2.1	0.0214
P34-8M-50-SH	**110743**	34	3.409	3.355	3.810	D1F	0.50	0.18	1/2	1-11/16	2.2	0.0263
P36-8M-50-SH	**110744**	36	3.609	3.555	4.009	D1F	0.50	0.18	1/2	1-11/16	2.8	0.0367
P38-8M-50-SH	**110745**	38	3.810	3.756	4.210	D1F	0.50	0.18	1/2	1-11/16	3.1	0.0462
P40-8M-50-SH	**110746**	40	4.010	3.956	4.410	D1F	0.50	0.18	1/2	1-11/16	3.9	0.0632
P44-8M-50-SD	**110747**	44	4.411	4.357	4.764	D1F	0.56	1.74	1/2	2	5.5	0.1068
P48-8M-50-SD	**110748**	48	4.812	4.758	5.212	D1F	0.56	1.74	1/2	2	7.2	0.1644
P56-8M-50-SK	**110749**	56	5.614	5.560	6.014	D1F	0.56	0.33	1/2	2-15/16	11	0.3314
P64-8M-50-SK	**110750**	64	6.416	6.362	6.716	D1F	0.56	0.33	1/2	2-15/16	10	0.4400
P72-8M-50-SK	**110751**	72	7.218	7.164	7.500	D1F	0.56	0.33	1/2	2-15/16	16	0.8488
P80-8M-50-SF	**110752**	80	8.020	7.966	8.420	D1F	0.56	0.38	1/2	2-15/16	20	1.335
P90-8M-50-SF	**110753**	90	9.023	8.969	. . .	D1	0.56	0.38	1/2	2-15/16	25	2.102c
P112-8M-50-SF	**110754**	112	11.229	11.175	. . .	D2	0.75	0.19	1/2	2-15/16	32	4.152
P144-8M-50-E	**110755**	144	14.437	14.383	. . .	D3	0.38	0.82	7/8	3-1/2	45	9.391
P192-8M-50-E	**110756**	192	19.249	19.195	. . .	D3	0.38	0.82	7/8	3-1/2	65	20.42
8M-85					**F = 3.75"**							
P34-8M-85-SH	**110760**	34	3.409	3.355	3.810	A1F	1.50	0.82	1/2	1-11/16	3.1	0.0376
P36-8M-85-SH	**110761**	36	3.609	3.555	4.009	A1F	1.50	0.82	1/2	1-11/16	3.9	0.0535
P38-8M-85-SH	**110762**	38	3.810	3.756	4.210	A1F	1.50	0.82	1/2	1-11/16	4.4	0.0671
P40-8M-85-SD	**110763**	40	4.010	3.956	4.410	A1F	1.25	0.55	1/2	2	4.9	0.0836
P44-8M-85-SD	**110764**	44	4.411	4.357	4.764	A1F	1.25	0.55	1/2	2	7.8	0.1589
P48-8M-85-SD	**110765**	48	4.812	4.758	5.212	A1F	1.25	0.55	1/2	2	11	0.2496
P56-8M-85-SK	**110766**	56	5.614	5.560	6.014	A1F	1.25	0.36	1/2	2-5/8	12	0.4191
P64-8M-85-SK	**110767**	64	6.42	6.362	6.716	A1F	1.25	0.36	1/2	2-5/8	17	0.7664
P72-8M-85-SF	**110768**	72	7.218	7.164	7.500	A1F	1.25	0.31	1/2	2-15/16	19	1.114
P80-8M-85-SF	**110769**	80	8.020	7.966	8.420	A1F	1.25	0.31	1/2	2-15/16	29	1.982
P90-8M-85-SF	**110770**	90	9.023	8.969	. . .	A1	1.25	0.31	1/2	2-15/16	26	2.253
P112-8M-85-SF	**110771**	112	11.229	11.175	. . .	A2	1.25	0.31	1/2	2-15/16	38	5.286
P144-8M-85-E	**110772**	144	14.437	14.383	. . .	D3	1.06	0.14	7/8	3-1/2	61	14.031
P192-8M-85-E	**110773**	192	19.249	19.195	. . .	D3	1.06	0.14	7/8	3-1/2	76	26.80

FEATURES/BENEFITS PAGE PT11-2 | SELECTION PAGE PT11-19 | ENGINEERING/TECHNICAL PAGE PT11-64

14MM QD HTD Sprockets

Sprocket Number	Part No.	No. Of Teeth	Diameters P.D.	Diameters O.D.	Diameters Flange	Type	Dimensions (In.) M	Dimensions (In.) K	Bore Sizes Min.	Bore Sizes Max	Approx. Weight (Lbs.)	Approx. Wr^2 (Lb-Ft^2)
14M-40					**F = 2.13”**							
P28-14M-40-SK	**110780**	28	4.912	4.808	5.562	E1F	0.00	0.89	0.5	2-5/8	5.8	0.1301
P29-14M-40-SK	**110781**	29	5.088	4.983	5.562	E1F	0.00	0.89	0.5	2-5/8	6.5	0.1561
P30-14M-40-SK	**110782**	30	5.263	5.157	5.763	D1F	0.44	0.45	0.5	2-5/8	6.2	0.1629
P32-14M-40-SK	**110783**	32	5.614	5.507	6.114	D1F	0.44	0.45	0.5	2-5/8	7.8	0.2310
P34-14M-40-SK	**110784**	34	5.965	5.858	6.465	D1F	0.44	0.45	0.5	2-5/8	9.4	0.3113
P36-14M-40-SF	**110785**	36	6.316	6.208	6.816	D1F	0.44	0.50	0.5	2-15/16	9.6	0.3693
P38-14M-40-SF	**110786**	38	6.667	6.559	7.167	D1F	0.44	0.50	0.5	2-15/16	12	0.5080
P40-14M-40-SF	**110787**	40	7.018	6.909	7.518	D1F	0.44	0.50	0.5	2-15/16	13	0.6096
P44-14M-40-E	**110788**	44	7.720	7.610	8.395	D1F	0.38	0.82	0.875	3-1/2	16	0.9305
P48-14M-40-E	**110789**	48	8.421	8.311	8.941	D1F	0.38	0.82	0.875	3-1/2	20	1.360
P52-14M-40-E	**110790**	52	9.123	9.013	9.687	D1F	0.25	0.95	0.875	3-1/2	25	1.991
P56-14M-40-E	**110791**	56	9.825	9.715	10.355	D1F	0.25	0.95	0.875	3-1/2	29	2.583
P60-14M-40-E	**110792**	60	10.527	10.417	11.067	D1F	0.44	0.76	0.875	3-1/2	34	3.494
P64-14M-40-E	**110793**	64	11.229	11.119	11.750	D1F	0.44	0.76	0.875	3-1/2	39	4.489
P68-14M-40-E	**110794**	68	11.930	11.820	12.500	D2F	0.44	0.76	0.875	3-1/2	34	4.368
P72-14M-40-E	**110795**	72	12.632	12.522	13.066	D2F	0.31	0.89	0.875	3-1/2	40	5.811
P80-14M-40-E	**110796**	80	14.036	13.926	14.620	D3F	0.44	0.76	0.875	3-1/2	39	7.005
P90-14M-40-E	**110797**	90	15.790	15.680	. . .	D3	0.25	0.95	0.875	3-1/2	40	8.633
P112-14M-40-E	**110798**	112	19.650	19.540	. . .	D3	0.25	0.95	0.875	3-1/2	67	21.62
P144-14M-40-E	**110799**	144	25.264	25.154	. . .	D3	0.25	0.95	0.875	3-1/2	66	38.99
P168-14M-40-F	**110759**	168	29.475	29.265	. . .	C3	0.37	1.79	1	4	91	74.83
P192-14M-40-F	**110774**	192	33.686	33.576	. . .	C3	0.37	1.79	1	4	108	117.1
14M-55					**F = 2.75”**							
P28-14M-55-SK	**110805**	28	4.912	4.808	5.562	E1F	0.00	0.89	0.5	2-5/8	7.3	0.1657
P29-14M-55-SK	**110806**	29	5.088	4.983	5.562	E1F	0.00	0.89	0.5	2-5/8	8.2	0.1991
P30-14M-55-SK	**110807**	30	5.263	5.157	5.763	D1F	0.75	0.14	0.5	2-5/8	7.5	0.1989
P32-14M-55-SK	**110808**	32	5.614	5.507	6.114	D1F	0.75	0.14	0.5	2-5/8	9.5	0.2868
P34-14M-55-SK	**110809**	34	5.965	5.858	6.465	D1F	0.75	0.14	0.5	2-5/8	11	0.3851
P36-14M-55-SF	**110810**	36	6.316	6.208	6.816	D1F	0.75	0.19	0.5	2-15/16	11	0.4515
P38-14M-55-SF	**110811**	38	6.667	6.559	7.167	D1F	0.75	0.19	0.5	2-15/16	14	0.6139
P40-14M-55-SF	**110812**	40	7.018	6.909	7.518	D1F	0.75	0.19	0.5	2-15/16	15	0.7440
P44-14M-55-E	**110813**	44	7.720	7.610	8.395	D1F	0.56	0.64	0.875	3-1/2	19	1.136
P48-14M-55-E	**110814**	48	8.421	8.311	8.941	D1F	0.56	0.64	0.875	3-1/2	23	1.641
P52-14M-55-E	**110815**	52	9.123	9.013	9.687	D1F	0.56	0.64	0.875	3-1/2	30	2.454
P56-14M-55-E	**110816**	56	9.825	9.715	10.355	D1F	0.56	0.64	0.875	3-1/2	32	3.030
P60-14M-55-E	**110817**	60	10.527	10.417	11.067	D1F	0.56	0.64	0.875	3-1/2	38	4.038
P64-14M-55-F	**110818**	64	11.229	11.119	11.750	D1F	0.13	1.29	1	4	54	6.267
P68-14M-55-F	**110819**	68	11.930	11.820	12.500	D1F	0.13	1.29	1	4	62	8.029
P72-14M-55-F	**110820**	72	12.632	12.522	13.066	D1F	0.13	1.29	1	4	71	10.32
P80-14M-55-F	**110821**	80	14.036	13.926	14.620	D1F	0.13	1.29	1	4	89	15.76
P90-14M-55-F	**110822**	90	15.790	15.680	. . .	D2	0.13	1.29	1	4	61	12.67
P112-14M-55-F	**110823**	112	19.650	19.540	. . .	D3	0.13	1.29	1	4	80	25.72
P144-14M-55-F	**110824**	144	25.264	25.154	. . .	D3	0.13	1.29	1	4	90	55.45
P168-14M-55-F	**110825**	168	29.475	29.265	. . .	D3	0.13	1.29	1	4	111	95.26
P192-14M-55-F	**110826**	192	33.686	33.576	. . .	D3	0.13	1.29	1	4	134	149.7
P216-14M-55-F	**110827**	216	37.896	37.786	. . .	D3	0.13	1.29	1	4	159	223.9
14M-85					**F = 4”**							
P30-14M-85-SK	**110832**	30	5.263	5.157	5.763	A1F	1.38	0.49	1/2	2-11/16	10	0.2715
P32-14M-85-SK	**110833**	32	5.614	5.507	6.114	A1F	1.38	0.49	1/2	2-5/8	13	0.3993
P34-14M-85-SK	**110834**	34	5.965	5.858	6.465	A1F	1.38	0.49	1/2	2-5/8	15	0.5387
P36-14M-85-SF	**110835**	36	6.316	6.208	6.816	A1F	1.5	0.56	1/2	2-15/16	15	0.6171
P38-14M-85-SF	**110836**	38	6.667	6.559	7.167	A1F	1.38	0.44	1/2	2-15/16	19	0.8559
P40-14M-85-SF	**110837**	40	7.018	6.909	7.518	A1F	1.38	0.44	1/2	2-15/16	22	1.097
P44-14M-85-E	**110838**	44	7.720	7.610	8.395	D1F	1.19	0.01	7/8	3-1/2	23	1.390
P48-14M-85-E	**110839**	48	8.421	8.311	8.941	D1F	1.19	0.01	7/8	3-1/2	29	2.133
P52-14M-85-E	**110840**	52	9.123	9.013	9.687	D1F	1.19	0.01	7/8	3-1/2	35	2.972
P56-14M-85-F	**110841**	56	9.825	9.715	10.355	D1F	0.75	0.67	1	4	46	4.426
P60-14M-85-F	**110842**	60	10.527	10.417	11.067	D1F	0.75	0.67	1	4	57	6.259
P64-14M-85-F	**110843**	64	11.229	11.119	11.750	D1F	0.75	0.67	1	4	64	7.866
P68-14M-85-F	**110852**	68	11.930	11.820	12.500	D1F	0.75	0.67	1	4	75	10.40
P72-14M-85-F	**110844**	72	12.632	12.522	13.066	D1F	0.75	0.67	1	4	89	13.74
P80-14M-85-F	**110845**	80	14.036	13.926	14.620	D1F	0.75	0.67	1	4	100	18.65
P90-14M-85-F	**110846**	90	15.790	15.680	. . .	D3	0.75	0.67	1	4	57	12.19
P112-14M-85-F	**110847**	112	19.650	19.540	. . .	D3	0.75	0.67	1	4	94	32.92
P144-14M-85-F	**110848**	144	25.264	25.154	. . .	D3	0.75	0.67	1	4	129	73.66
P168-14M-85-F	**110849**	168	29.475	29.265	. . .	D3	0.69	0.73	1	4	144	126.7
P192-14M-85-F	**110850**	192	33.686	33.576	. . .	D3	0.69	0.73	1	4	178	203.8
P216-14M-85-F	**110851**	216	37.896	37.786	. . .	D3	0.69	0.73	1	4	216	315.6

FEATURES/BENEFITS PAGE PT11-2 | SELECTION PAGE PT11-19 | ENGINEERING/TECHNICAL PAGE PT11-64

SPECIFICATION

QD HTD Sprockets

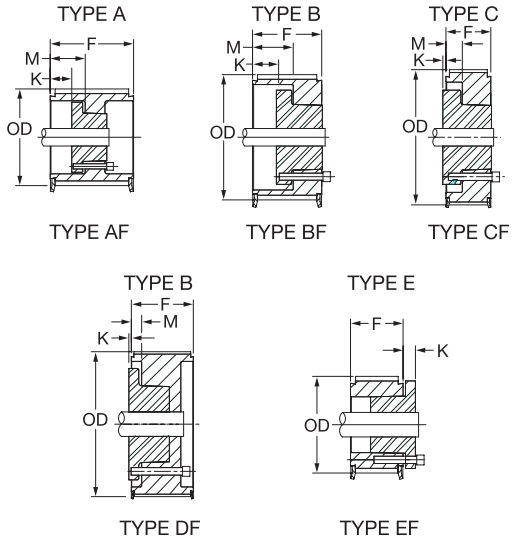

The figure following the sketch reference letter in the "Type" column indicates the construction of the sprocket (1 = Solid, 2 = Web, and 3 = Arms), and the letter "F" indicates that the sprocket has flanges.

14MM QD HTD Sprockets

Sprocket Number	Part No.	No. Of Teeth	Diameters P.D.	Diameters O.D.	Diameters Flange	Type	Dimensions (In.) M	Dimensions (In.) K	Bore Sizes Min.	Bore Sizes Max	Approx. Weight (Lbs.)	Approx. Wr^2 (Lb-Ft^2)
14M-115					**F = 5.25"**							
P30-14M-115-SK	**110857**	30	5.263	5.157	5.763	A1F	2.00	1.11	1/2	2-5/8	12	0.3441
P32-14M-115-SK	**110858**	32	5.614	5.507	6.114	A1F	2.00	1.11	1/2	2-5/8	16	0.5084
P34-14M-115-SK	**110859**	34	5.965	5.858	6.465	A1F	2.00	1.11	1/2	2-5/8	20	0.7035
P36-14M-115-SF	**110860**	36	6.316	6.208	6.816	A1F	2.00	1.06	1/2	2-15/16	19	0.7834
P38-14M-115-SF	**110861**	38	6.667	6.559	7.167	A1F	2.00	1.06	1/2	2-15/16	22	1.000
P40-14M-115-SF	**110862**	40	7.018	6.909	7.518	A1F	2.00	1.06	1/2	2-15/16	26	1.306
P44-14M-115-E	**110863**	44	7.720	7.610	8.395	A1F	2.00	0.80	7/8	3-1/2	27	1.717
P48-14M-115-E	**110864**	48	8.421	8.311	8.941	A1F	1.94	0.74	7/8	3-1/2	36	2.657
P52-14M-115-F	**110865**	52	9.123	9.013	9.687	D1F	1.38	0.05	1	4	48	4.133
P56-14M-115-F	**110866**	56	9.825	9.715	10.355	D1F	1.38	0.05	1	4	54	5.326
P60-14M-115-F	**110867**	60	10.527	10.417	11.067	D1F	1.38	0.05	1	4	63	7.105
P64-14M-115-J	**110868**	64	11.229	11.119	11.750	D1F	1.00	0.20	1-1/2	4-1/2	81	10.377
P68-14M-115-J	**110869**	68	11.930	11.820	12.500	D1F	1.00	0.20	1-1/2	4-1/2	90	12.89
P72-14M-115-J	**110870**	72	12.632	12.522	13.066	D1F	1.00	0.20	1-1/2	4-1/2	101	16.06
P80-14M-115-J	**110871**	80	14.036	13.926	14.620	D2F	1.00	0.20	1-1/2	4-1/2	108	21.04
P90-14M-115-J	**110872**	90	15.790	15.680	. . .	D2	1.00	0.20	1-1/2	4-1/2	121	29.10
P112-14M-115-J	**110873**	112	19.650	19.540	. . .	D3	1.00	0.20	1-1/2	4-1/2	117	46.65
P144-14M-115-J	**110874**	144	25.264	25.154	. . .	D3	1.06	0.14	1-1/2	4-1/2	157	113.9
P168-14M-115-J	**110875**	168	29.475	29.265	. . .	D3	1.06	0.14	1-1/2	4-1/2	198	209.1
P192-14M-115-J	**110876**	192	33.686	33.576	. . .	D3	1.06	0.14	1-1/2	4-1/2	240	265.8
P216-14M-115-J	**110877**	216	37.896	37.786	. . .	D3	1.06	0.14	1-1/2	4-1/2	284	401.7
14M-170					**F = 7.38"**							
P44-14M-170-E	**110883**	44	7.720	7.610	8.395	A1F	2.88	1.68	7/8	3-1/2	35	2.273
P48-14M-170-E	**110884**	48	8.421	8.311	8.941	A1F	2.88	1.68	7/8	3-1/2	46	3.550
P52-14M-170-F	**110885**	52	9.123	9.013	9.687	A1F	2.44	1.02	1	4	61	5.430
P56-14M-170-F	**110886**	56	9.825	9.715	10.355	A1F	2.44	1.02	1	4	67	6.860
P60-14M-170-J	**110887**	60	10.527	10.417	11.067	A1F	2.28	1.08	1-1/2	4-1/2	81	9.546
P64-14M-170-J	**110888**	64	11.229	11.119	11.750	A1F	2.13	0.93	1-1/2	4-1/2	100	13.31
P68-14M-170-J	**110897**	68	11.930	11.820	12.500	A1F	2.13	0.93	1-1/2	4-1/2	108	16.08
P72-14M-170-J	**110889**	72	12.632	12.522	13.066	A1F	2.13	0.93	1-1/2	4-1/2	119	19.72
P80-14M-170-J	**110890**	80	14.036	13.926	14.620	A2F	2.13	0.93	1-1/2	4-1/2	129	26.66
P90-14M-170-J	**110891**	90	15.790	15.680	. . .	A2	2.13	0.93	1-1/2	4-1/2	163	41.42
P112-14M-170-M	**110892**	112	19.650	19.540	. . .	D3	1.44	0.30	2	5-1/2	188	63.86
P144-14M-170-M	**110893**	144	25.264	25.154	. . .	D3	1.44	0.30	2	5-1/2	240	146.9
P168-14M-170-M	**110894**	168	29.475	29.265	. . .	D3	1.44	0.30	2	5-1/2	279	247.5
P192-14M-170-M	**110895**	192	33.686	33.576	. . .	D3	1.44	0.30	2	5-1/2	541	746.7
P216-14M-170-M	**110896**	216	37.896	37.786	. . .	D3	1.44	0.30	2	5-1/2	443	774.6

FEATURES/BENEFITS PAGE PT11-2 | SELECTION PAGE PT11-19 | ENGINEERING/TECHNICAL PAGE PT11-64

QD HTD Sprockets

20MM QD HTD Sprockets

SPROCKET NUMBER	PART NO.	NO. OF TEETH	DIAMETERS P.D.	DIAMETERS O.D.	DIAMETERS FLANGE	TYPE	DIMENSIONS (IN.) M	DIMENSIONS (IN.) K	Bore Sizes Min.	Bore Sizes Max	Approx. Weight (LBS.)
20M-115					**F = 5.38”**						
P34-20M-115-F	**114668**	34	8.522	8.352	9.449	A1F	1.44	0.02	1	4	42
P36-20M-115-F	**114669**	36	9.023	8.853	9.843	A1F	1.44	0.02	1	4	50
P38-20M-115-F	**114670**	38	9.524	9.354	10.443	A1F	1.44	0.02	1	4	55
P40-20M-115-F	**114671**	40	10.026	9.855	10.827	A1F	1.44	0.02	1	4	61
P44-20M-115-F	**114672**		11.028	10.858	11.811	A1F	1.44	0.02	1	4	74
P48-20M-115-J	**114673**	48	12.031	11.861	12.795	D1F	1.19	0.01	1-1/2	4-1/2	100
P52-20M-115-J	**114674**	52	13.033	12.863	13.764	D2F	1.19	0.01	1-1/2	4-1/2	96
P56-20M-115-J	**114675**	56	14.036	13.856	14.764	D2F	1.19	0.01	1-1/2	4-1/2	103
P60-20M-115-J	**114676**	60	15.038	14.868	15.927	D2F	1.19	0.01	1-1/2	4-1/2	110
P64-20M-115-J	**114677**	64	16.041	15.871	16.929	D2F	1.19	0.01	1-1/2	4-1/2	119
P68-20M-115-J	**114678**	68	17.032	16.873	17.927	D2F	1.19	0.01	1-1/2	4-1/2	125
P72-20M-115-J	**114679**	72	18.046	17.876	18.898	D2F	1.19	0.01	1-1/2	4-1/2	135
P80-20M-115-M	**114680**	80	20.051	19.881	20.866	D2F	0.19	1.55	2	5-1/2	216
P90-20M-115-M	**114681**	90	22.557	22.387	23.425	D2F	0.19	1.55	2	5-1/2	247
P112-20M-115-M	**114682**	112	28.071	27.901	. . .	D3	0.19	1.55	2	5-1/2	273
P144-20M-115-N	**114683**	144	36.092	35.922	. . .	C3	0.00	2.05	2-7/16	5-7/8	392
P168-20M-115-N	**114684**	168	42.107	41.937	. . .	C3	0.00	2.05	2-7/16	5-7/8	469
P192-20M-115-N	**114685**	192	48.122	47.952	. . .	C3	0.00	2.05	2-7/16	5-7/8	552
P216-20M-115-N	**114686**	216	54.136	53.958	. . .	C3	0.00	2.05	2-7/16	5-7/8	618
20M-170					**F = 7.5”**						
P34-20M-170-MPB	**114687**	34	8.522	8.352	9.449	6F	2.25	1.25	2-1/8	4-3/8	81
P36-20M-170-MPB	**114688**	36	9.023	8.853	9.843	6F	2.25	1.25	2-1/8	4-1/2	93
P38-20M-170-J	**114689**	38	9.524	9.354	10.443	A1F	2.19	0.99	1-1/2	4-1/2	72
P40-20M-170-J	**114690**	40	10.026	9.855	10.827	A1F	2.19	0.99	1-1/2	4-1/2	80
P44-20M-170-J	**114691**	44	11.028	10.858	11.811	A1F	2.19	0.99	1-1/2	4-1/2	97
P48-20M-170-M	**114692**	48	12.031	11.861	12.795	D1F	1.50	0.24	2	5-1/2	148
P52-20M-170-M	**114693**	52	13.033	12.863	13.764	D1F	1.50	0.24	2	5-1/2	175
P56-20M-170-M	**114694**	56	14.036	13.856	14.764	D1F	1.50	0.24	2	5-1/2	204
P60-20M-170-M	**114695**	60	15.038	14.868	15.927	D1F	1.50	0.24	2	5-1/2	233
P64-20M-170-M	**114696**	64	16.041	15.871	16.929	D2F	1.50	0.24	2	5-1/2	210
P68-20M-170-M	**114697**	68	17.032	16.873	17.927	D2F	1.50	0.24	2	5-1/2	222
P72-20M-170-M	**114698**	72	18.046	17.876	18.898	D2F	1.50	0.24	2	5-1/2	230
P80-20M-170-M	**114699**	80	20.051	19.881	20.866	D2F	1.50	0.24	2	5-1/2	249
P90-20M-170-M	**114700**	90	22.557	22.387	23.425	D2F	1.50	0.24	2	5-1/2	285
P112-20M-170-N	**114701**	112	28.071	27.901	. . .	D3	1.25	0.80	2-7/16	5-7/8	361
P144-20M-170-N	**114702**	144	36.092	35.922	. . .	D3	1.25	0.80	2-7/16	5-7/8	478
P168-20M-170-P	**114703**	168	42.107	41.937	. . .	C3	1.06	1.24	2-7/16	7	658
P192-20M-170-P	**114704**	192	48.122	47.952	. . .	C3	1.06	1.24	2-7/16	7	739
P216-20M-170-P	**114705**	216	54.136	53.958	. . .	C3	1.06	1.24	2-7/16	7	901
20M-230					**F = 9.88”**						
P38-20M-230-MPB	**114706**	38	9.524	9.354	10.443	6F	2.63	1.25	2-7/8	5-1/4	120
P40-20M-230-MPB	**114707**	40	10.026	9.855	10.827	6F	2.63	1.25	2-7/8	5-7/8	147
P44-20M-230-MPB	**114708**	44	11.028	10.858	11.811	6F	2.63	1.25	2-7/8	6	180
P48-20M-230-M	**114709**	48	12.031	11.861	12.795	A1F	2.00	0.26	2	5-1/2	164
P52-20M-230-M	**114710**	52	13.033	12.863	13.764	A1F	2.00	0.26	2	5-1/2	193
P56-20M-230-M	**114711**		14.036	13.856	14.764	A1F	2.00	0.26	2	5-1/2	224
P60-20M-230-M	**114712**	60	15.038	14.868	15.927	A1F	2.00	0.26	2	5-1/2	252
P64-20M-230-M	**114713**	64	16.041	15.871	16.929	A2F	2.00	0.26	2	5-1/2	233
P68-20M-230-N	**114714**	68	17.032	16.873	17.927	D1F	1.81	0.24	2-7/16	5-7/8	375
P72-20M-230-N	**114715**	72	18.046	17.876	18.898	D2F	1.81	0.24	2-7/16	5-7/8	339
P80-20M-230-N	**114716**	80	20.051	19.881	20.866	D2F	1.81	0.24	2-7/16	5-7/8	331
P90-20M-230-N	**114717**	90	22.557	22.387	23.425	D2F	1.81	0.24	2-7/16	5-7/8	370
P112-20M-230-N	**114718**	112	28.071	27.901	. . .	D3	1.81	0.24	2-7/16	5-7/8	409
P144-20M-230-P	**114719**	144	36.092	35.922	. . .	D3	1.31	0.99	2-15/16	7	622
P168-20M-230-P	**114720**	168	42.107	41.937	. . .	D3	1.31	0.99	2-15/16	7	742
P192-20M-230-W	**114721**	192	48.122	47.952	. . .	C3	1.50	1.06	4	8-1/2	1111
P216-20M-230-W	**114722**	216	54.136	53.958	. . .	C3	1.50	1.06	4	8-1/2	1238

FEATURES/BENEFITS PAGE PT11-2
SELECTION PAGE PT11-19
ENGINEERING/TECHNICAL PAGE PT11-64

SPECIFICATION

QD HTD Sprockets

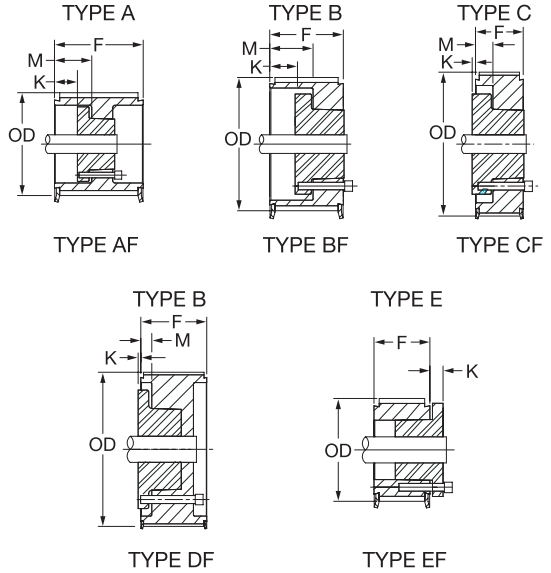

The figure following the sketch reference letter in the "Type" column indicates the construction of the sprocket (1 = Solid, 2 = Web, and 3 = Arms), and the letter "F" indicates that the sprocket has flanges.

20MM QD HTD Sprockets

Sprocket Number	Part No.	No. Of Teeth	Diameters (Inches) Pitch	O.D.	Flange	Type	Dimensions Inches) M	K	Bore Sizes Min.	Max.	Wt. (Lbs)
20M-290					**F = 12.25"**						
P52-20M-290-N	**114723**	52	13.033	12.863	13.764	A1F	2.50	0.50	2-7/16	5-7/8	202.7
P56-20M-290-N	**114724**	56	14.036	13.856	14.764	A1F	2.50	0.50	2-7/16	5-7/8	238.8
P60-20M-290-N	**114725**	60	15.038	14.868	15.927	A1F	2.50	0.50	2-7/16	5-7/8	276.5
P64-20M-290-N	**114726**	64	16.041	15.871	16.929	A1F	2.50	0.50	2-7/16	5-7/8	319.8
P68-20M-290-N	**114727**	68	17.032	16.873	17.927	A1F	2.50	0.50	2-7/16	5-7/8	367.9
P72-20M-290-N	**114728**	72	18.046	17.876	18.898	A2F	2.50	0.50	2-7/16	5-7/8	364.0
P80-20M-290-N	**114729**	80	20.051	19.881	20.866	A2F	2.50	0.50	2-7/16	5-7/8	369.6
P90-20M-290-N	**114730**	90	22.557	22.387	23.425	A2F	2.50	0.50	2-7/16	5-7/8	424.3
P112-20M-290-P	**114731**	112	28.071	27.901	. . .	A2	2.50	0.25	2-15/16	7	614.6
P144-20M-290-P	**114732**	144	36.092	35.922	. . .	A3	2.50	0.25	2-15/16	7	679.8
P168-20M-290-W	**114733**	168	42.107	41.937	. . .	A3	2.69	0.19	4	8-1/2	1117.1
P192-20M-290-W	**114734**	192	48.122	47.952	. . .	A3	2.69	0.19	4	8-1/2	1281.0
P216-20M-290-W	**114735**	216	54.136	53.958	. . .	A3	2.69	0.19	4	8-1/2	1175.6
20M-340					**F = 14.25"**						
P52-20M-340-N	**114736**	52	13.033	12.863	13.764	A1F	2.50	0.50	2-7/16	5-7/8	221.0
P56-20M-340-N	**114737**	56	14.036	13.856	14.764	A1F	2.50	0.50	2-7/16	5-7/8	258.0
P60-20M-340-N	**114738**	60	15.038	14.868	15.927	A1F	2.50	0.50	2-7/16	5-7/8	293.4
P64-20M-340-N	**114739**	64	16.041	15.871	16.929	A1F	2.50	0.50	2-7/16	5-7/8	337.9
P68-20M-340-N	**114740**	68	17.032	16.873	17.927	A1F	2.50	0.50	2-7/16	5-7/8	388.1
P72-20M-340-N	**114741**	72	18.046	17.876	18.898	A2F	2.50	0.50	2-7/16	5-7/8	393.1
P80-20M-340-P	**114742**	80	20.051	19.881	20.866	A1F	3.50	1.25	2-15/16	7	560.0
P90-20M-340-P	**114743**	90	22.557	22.387	23.425	A2F	3.50	1.25	2-15/16	7	497.3
P112-20M-340-P	**114744**	112	28.071	27.901	. . .	A2	3.50	1.25	2-15/16	7	653 3
P144-20M-340-W	**114745**	144	36.092	35.922	. . .	A3	2.63	0.13	4	8-1/2	851.0
P168-20M-340-W	**114746**	168	42.107	41.937	. . .	A3	2.63	0.13	4	8-1/2	1177.0
P192-20M-340-S	**114747**	192	48.122	47.952	. . .	D3	1.13	2.38	5-1/2	10	1519.4
P216-20M-340-S	**114748**	216	54.136	53.958	. . .	D3	1.13	2.38	5-1/2	10	1473.5

FEATURES/BENEFITS PAGE PT11-2	SELECTION PAGE PT11-19	ENGINEERING/TECHNICAL PAGE PT11-64

SPECIFICATION

DODGE H200 Belts

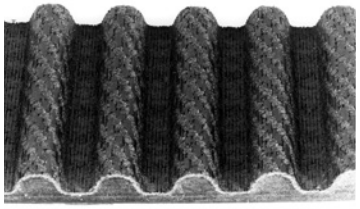

- 200% Rating of HTD Belts
- For Use on TAPER-LOCK HT Sprockets

Note: Belt length is in millimeters
To convert to inches, divide by 25.4
Example: 2600-8M-30 belt size
2600 ÷ 25.4 = 102.36 inches belt length

5 MM Pitch HT200 Belts

15MM Wide			15MM Wide			25MM Wide			25MM Wide		
Description	Part No.	Wgt.	Description	Part No.	Wgt.	Description	Part No.	Wgt.	Description	Part No.	Wgt.
300-5M-15	**142100**	0.04	650-5M-15	**142110**	0.09	300-5M-25	**142122**	0.07	650-5M-25	**142132**	0.15
355-5M-15	**142101**	0.05	700-5M-15	**142111**	0.09	355-5M-25	**142123**	0.08	700-5M-25	**142133**	0.15
375-5M-15	**142102**	0.05	750-5M-15	**142112**	0.10	375-5M-25	**142124**	0.09	750-5M-25	**142134**	0.17
400-5M-15	**142103**	0.05	800-5M-15	**142113**	0.11	400-5M-25	**142125**	0.09	800-5M-25	**142135**	0.18
405-5M-15	**142145**	0.05	850-5M-15	**142148**	0.11	405-5M-25	**142149**	0.09	850-5M-25	**142152**	0.19
425-5M-15	**142104**	0.06	900-5M-15	**142114**	0.12	425-5M-25	**142126**	0.10	900-5M-25	**142136**	0.20
450-5M-15	**142105**	0.06	1000-5M-15	**142115**	0.14	450-5M-25	**142127**	0.10	1000-5M-25	**142137**	0.23
500-5M-15	**142106**	0.07	1150-5M-15	**142116**	0.16	500-5M-25	**142128**	0.11	1150-5M-25	**142138**	0.26
535-5M-15	**142107**	0.07	1300-5M-15	**142117**	0.18	535-5M-25	**142129**	0.12	1300-5M-25	**142139**	0.29
565-5M-15	**142108**	0.08	1450-5M-15	**142118**	0.20	565-5M-25	**142130**	0.13	1450-5M-25	**142140**	0.34
580-5M-15	**142146**	0.08	1600-5M-15	**142119**	0.22	580-5M-25	**142150**	0.13	1600-5M-25	**142141**	0.36
600-5M-15	**142109**	0.08	1720-5M-15	**142120**	0.23	600-5M-25	**142131**	0.14	1720-5M-25	**142142**	0.39
625-5M-15	**142147**	0.09	2100-5M-15	**142121**	0.29	625-5M-25	**142151**	0.14	2100-5M-25	**142143**	0.47

8 MM Pitch HT200 Belts

20MM Wide			30MM Wide			50MM Wide			85MM Wide		
Description	Part No.	Wt.	Description	Part No.	Wt.	Description	Part No.	Wt.	Description	Part No.	Wt.
384-8M-20	**146400**	0.12	384-8M-30	**146433**	0.19	384-8M-50	**146466**	0.33	384-8M-85	**146499**	0.55
480-8M-20	**146401**	0.13	480-8M-30	**146434**	0.20	480-8M-50	**146467**	0.34	480-8M-85	**146500**	0.57
560-8M-20	**146402**	0.16	560-8M-30	**146435**	0.23	560-8M-50	**146468**	0.39	560-8M-85	**146501**	0.66
600-8M-20	**146403**	0.17	600-8M-30	**146436**	0.25	600-8M-50	**146469**	0.42	600-8M-85	**146502**	0.71
640-8M-20	**146404**	0.18	640-8M-30	**146437**	0.27	640-8M-50	**146470**	0.45	640-8M-85	**146503**	0.76
720-8M-20	**146405**	0.20	720-8M-30	**146438**	0.30	720-8M-50	**146471**	0.50	720-8M-85	**146504**	0.85
800-8M-20	**146406**	0.22	800-8M-30	**146439**	0.33	800-8M-50	**146472**	0.56	800-8M-85	**146505**	0.95
840-8M-20	**146407**	0.23	840-8M-30	**146440**	0.35	840-8M-50	**146473**	0.59	840-8M-85	**146505**	1.00
880-8M-20	**146408**	0.25	880-8M-30	**146441**	0.37	880-8M-50	**146474**	0.61	880-8M-85	**146507**	1.04
920-8M-20	**146409**	0.26	920-8M-30	**146442**	0.39	920-8M-50	**146475**	0.64	920-8M-85	**146508**	1.09
960-8M-20	**146410**	0.27	960-8M-30	**146443**	0.40	960-8M-50	**146476**	0.67	960-8M-85	**146509**	1.14
1040-8M-20	**146411**	0.29	1040-8M-30	**146444**	0.43	1040-8M-50	**146477**	0.74	1040-8M-85	**146510**	1.23
1064-8M-20	**146412**	0.30	1064-8M-30	**146445**	0.45	1064-8M-50	**146478**	0.76	1064-8M-85	**146511**	1.27
1120-8M-20	**146413**	0.31	1120-8M-30	**146446**	0.47	1120-8M-50	**146479**	0.78	1120-8M-85	**146512**	1.33
1160-8M-20	**146414**	0.32	1160-8M-30	**146447**	0.48	1160-8M-50	**146480**	0.8	1160-8M-85	**146513**	1.28
1200-8M-20	**146415**	0.34	1200-8M-30	**146448**	0.50	1200-8M-50	**146481**	0.84	1200-8M-85	**146514**	1.42
1224-8M-20	**146416**	0.35	1224-8M-30	**146449**	0.51	1224-8M-50	**146482**	0.87	1224-8M-85	**146515**	1.47
1280-8M-20	**146417**	0.36	1280-8M-30	**146450**	0.53	1280-8M-50	**146483**	0.89	1280-8M-85	**146516**	1.52
1440-8M-20	**146418**	0.40	1440-8M-30	**146451**	0.60	1440-8M-50	**146484**	1.01	1440-8M-85	**146517**	1.71
1512-8M-20	**146419**	0.42	1512-8M-30	**146452**	0.62	1512-8M-50	**146485**	1.05	1512-8M-85	**146518**	1.79
1584-8M-20	**146420**	0.43	1584-8M-30	**146453**	0.65	1584-8M-50	**146486**	1.09	1584-8M-85	**146519**	1.82
1600-8M-20	**146421**	0.45	1600-8M-30	**146454**	0.67	1600-8M-50	**146487**	1.11	1600-8M-85	**146520**	1.90
1760-8M-20	**146422**	0.49	1760-8M-30	**146455**	0.73	1760-8M-50	**146488**	1.23	1760-8M-85	**146521**	2.08
1800-8M-20	**146423**	0.50	1800-8M-30	**146456**	0.75	1800-8M-50	**146489**	1.25	1800-8M-85	**146522**	2.13
2000-8M-20	**146424**	0.56	2000-8M-30	**146457**	0.83	2000-8M-50	**146490**	1.39	2000-8M-85	**146523**	2.37
2200-8M-20	**146425**	0.60	2200-8M-30	**146458**	0.90	2200-8M-50	**146491**	1.50	2200-8M-85	**146524**	2.55
2400-8M-20	**146426**	0.67	2400-8M-30	**146459**	1.00	2400-8M-50	**146492**	1.67	2400-8M-85	**146525**	2.84
2600-8M-20	**146427**	0.79	2600-8M-30	**146460**	1.09	2600-8M-50	**146493**	1.81	2600-8M-85	**146526**	3.09
2800-8M-20	**146428**	0.80	2800-8M-30	**146461**	1.17	2800-8M-50	**146494**	1.95	2800-8M-85	**146527**	3.32
3048-8M-20	**146429**	0.85	3048-8M-30	**146462**	1.27	3048-8M-50	**146495**	2.00	3048-8M-85	**146528**	3.62
3280-8M-20	**146430**	0.92	3280-8M-30	**146463**	1.37	3280-8M-50	**146496**	2.29	3280-8M-85	**146529**	3.89
3600-8M-20	**146431**	1.01	3600-8M-30	**146464**	1.51	3600-8M-50	**146497**	2.51	3600-8M-85	**146530**	4.27
4400-8M-20	**146432**	1.23	4400-8M-30	**146465**	1.84	4400-8M-50	**146498**	3.07	4400-8M-85	**146531**	5.22

FEATURES/BENEFITS PAGE PT11-2	SELECTION PAGE PT11-19	ENGINEERING/TECHNICAL PAGE PT11-64	

SPECIFICATION

DODGE H200 Belts

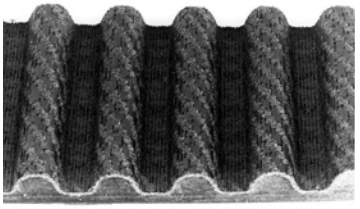

- 200% Rating of HTD Belts
- For Use on TAPER-LOCK HT Sprockets

Note: Belt length is in millimeters
To convert to inches, divide by 25.4

Example: 2600-8M-30 belt size
2600 ÷ 25.4 = 102.36 inches belt length

14 MM Pitch HT200 Belts

40MM Wide			55MM Wide			85MM Wide			115MM Wide			170MM Wide		
Description	**Part No.**	**Wt.**	**Description**	**Part No.**	**Wt.**	**Description**	**Part No.**	**Wt.**	**Description**	**Part No.**	**Wt.**	**Description**	**Part No.**	**Wt.**
966-14M-40	**146532**	0.84	966-14M-55	**146554**	1.15	966-14M-85	**146576**	1.78	966-14M-115	**146598**	2.41	966-14M-170	**146620**	3.56
1190-14M-40	**146533**	1.03	1190-14M-55	**146555**	1.42	1190-14M-85	**146577**	2.20	1190-14M-115	**146599**	2.98	1190-14M-170	**146621**	4.39
1400-14M-40	**146534**	1.21	1400-14M-55	**146556**	1.67	1400-14M-85	**146578**	2.58	1400-14M-115	**146600**	3.50	1400-14M-170	**146622**	5.16
1610-14M-40	**146535**	1.40	1610-14M-55	**146557**	1.92	1610-14M-85	**146579**	2.97	1610-14M-115	**146601**	4.02	1610-14M-170	**146623**	5.95
1778-14M-40	**146536**	1.54	1778-14M-55	**146558**	2.13	1778-14M-85	**146580**	3.28	1778-14M-115	**146602**	4.45	1778-14M-170	**146624**	6.56
1890-14M-40	**146537**	1.64	1890-14M-55	**146559**	2.26	1890-14M-85	**146581**	3.49	1890-14M-115	**146603**	4.73	1890-14M-170	**146625**	6.97
2100-14M-40	**146538**	1.82	2100-14M-55	**146560**	2.51	2100-14M-85	**146582**	3.88	2100-14M-115	**146604**	5.25	2100-14M-170	**146626**	7.75
2310-14M-40	**146539**	2.00	2310-14M-55	**146561**	2.76	2310-14M-85	**146583**	4.26	2310-14M-115	**146605**	5.77	2310-14M-170	**146627**	8.53
2450-14M-40	**146540**	2.13	2450-14M-55	**146562**	2.93	2450-14M-85	**146584**	4.52	2450-14M-115	**146606**	6.13	2450-14M-170	**146628**	9.04
2590-14M-40	**146541**	2.25	2590-14M-55	**146563**	3.10	2590-14M-85	**146585**	4.78	2590-14M-115	**146607**	6.47	2590-14M-170	**146629**	9.55
2800-14M-40	**146542**	2.43	2800-14M-55	**146564**	3.34	2800-14M-85	**146586**	5.17	2800-14M-115	**146608**	7.00	2800-14M-170	**146630**	10.33
3150-14M-40	**146543**	2.73	3150-14M-55	**146565**	3.77	3150-14M-85	**146587**	5.82	3150-14M-115	**146609**	7.87	3150-14M-170	**146631**	11.62
3360-14M-40	**146544**	2.91	3360-14M-55	**146566**	4.02	3360-14M-85	**146588**	6.20	3360-14M-115	**146610**	8.39	3360-14M-170	**146631**	12.39
3500-14M-40	**146545**	3.03	3500-14M-55	**146567**	4.19	3500-14M-85	**146589**	6.46	3500-14M-115	**146611**	8.75	3500-14M-170	**146633**	12.90
3850-14M-40	**146546**	3.33	3850-14M-55	**146568**	4.60	3850-14M-85	**146590**	7.10	3850-14M-115	**146612**	9.62	3850-14M-170	**146634**	14.20
4326-14M-40	**146547**	3.74	4326-14M-55	**146569**	5.17	4326-14M-85	**146591**	8.00	4326-14M-115	**146613**	10.80	4326-14M-170	**146635**	15.96
4578-14M-40	**146548**	3.96	4578-14M-55	**146570**	5.48	4578-14M-85	**146592**	8.45	4578-14M-115	**146614**	11.42	4578-14M-170	**146636**	16.90
4956-14M-40	**146549**	4.29	4956-14M-55	**146571**	5.90	4956-14M-85	**146593**	9.11	4956-14M-115	**146615**	12.33	4956-14M-170	**146637**	18.23
5320-14M-40	**146550**	4.61	5320-14M-55	**146572**	6.33	5320-14M-85	**146594**	9.28	5320-14M-115	**146616**	13.24	5320-14M-170	**146638**	19.57
5740-14M-40	**146551**	4.97	5740-14M-55	**146573**	6.83	5740-14M-85	**146595**	10.55	5740-14M-115	**146617**	14.29	5740-14M-170	**146639**	25.00
6160-14M-40	**146552**	5.33	6160-14M-55	**146574**	7.33	6160-14M-85	**146596**	11.32	6160-14M-115	**146618**	15.34	6160-14M-170	**146640**	22.67
6860-14M-40	**146553**	5.94	6860-14M-55	**146575**	8.16	6860-14M-85	**146597**	12.61	6860-14M-115	**146619**	17.08	6860-14M-170	**146641**	25.25

20MM Pitch HTD Belts

115MM Wide			170MM Wide			230MM Wide			290MM Wide			340MM Wide		
Size	**Part No.**	**Wt.**	**Size**	**Part No.**	**Wt.**	**Size**	**Part No.**	**Wt.**	**Size**	**Part No.**	**Wt.**	**Size**	**Part No.**	**Wt.**
2000-20M-115	**142288**	6	2000-20M-170	**142303**	9	2000-20M-230	**142318**	12	2000-20M-290	**142333**	16	2000-20M-340	**142348**	19
2500-20M-115	**142289**	8	2500-20M-170	**142304**	11	2500-20M-230	**142319**	15	2500-20M-290	**142334**	20	2500-20M-340	**142349**	24
3400-20M-115	**142290**	11	3400-20M-170	**142305**	16	3400-20M-230	**142320**	22	3400-20M-290	**142335**	27	3400-20M-340	**142350**	32
3800-20M-115	**142291**	12	3800-20M-170	**142306**	18	3800-20M-230	**142321**	24.5	3800-20M-290	**142336**	30.5	3800-20M-340	**142351**	35.5
4200-20M-115	**142292**	13	4200-20M-170	**142307**	20	4200-20M-230	**142322**	27	4200-20M-290	**142337**	34	4200-20M-340	**142352**	39
4600-20M-115	**142293**	14.5	4600-20M-170	**142308**	21.5	4600-20M-230	**142323**	29.5	4600-20M-290	**142338**	37	4600-20M-340	**142353**	43
5000-20M-115	**142294**	16	5000-20M-170	**142309**	23	5000-20M-230	**142324**	32	5000-20M-290	**142339**	40	5000-20M-340	**142354**	47
5200-20M-115	**142295**	16.5	5200-20M-170	**142310**	24	5200-20M-230	**142325**	33	5200-20M-290	**142340**	41.5	5200-20M-340	**142355**	49
5400-20M-115	**142296**	17	5400-20M-170	**142311**	25	5400-20M-230	**142326**	34	5400-20M-290	**142341**	43	5400-20M-340	**142356**	51
5600-20M-115	**142297**	17.5	5600-20M-170	**142312**	26	5600-20M-230	**142327**	35.5	5600-20M-290	**142342**	44.5	5600-20M-340	**142357**	52.5
5800-20M-115	**142298**	18 0	5800-20M-170	**142313**	27	5800-20M-230	**142328**	37	5800-20M-290	**142343**	46	5800-20M-340	**142358**	54
6000-20M-115	**142299**	19	6000-20M-170	**142314**	28	6000-20M-230	**142329**	38	6000-20M-290	**142344**	48	6000-20M-340	**142359**	56
6200-20M-115	**142300**	20 0	6200-20M-170	**142315**	29	8200-20M-230	**142330**	39	6200-20M-290	**142345**	50	6200-20M 340	**142360**	58
6400-20M-115	**142301**	21	6400 20M 170	**142316**	30	6400-20M-230	**142331**	40.5	6400-20M-290	**142346**	51 5	6400-20M-340	**142361**	60 0
6600-20M-115	**142302**	22 0	6600-20M-170	**142317**	31	6600-20M-230	**142332**	42	6600-20M-290	**142347**	53	6600-20M-340	**142362**	62

FEATURES/BENEFITS PAGE PT11-2	SELECTION PAGE PT11-19	ENGINEERING/TECHNICAL PAGE PT11-64	

PROCEDURE

1. **Obtain required information:**
   - Motor name plate HP
   - Motor or DriveR RPM and Shaft size
   - DriveN Machine RPM and Shaft size
   - Approximate center distance
   - Service factor information
2. **Determine Service Factor: (Page PT11-20)**
   - Determine type of Driven Machine from Table 1
   - Choose Basic Service Factor in appropriate column of the following S.F. Table
   - Add additional service factor for slow speed drives, idlers or speed up drives were applicable
3. **Calculate Design Horsepower:**
   - Multiply Motor HP or normal running HP times Service Factor from Step 2
   - Note: Recommended Min. Sprocket Diameter, if applicable, from NEMA table on page PT11-21.
4. **Determine Belt Pitch: (Page PT11-21)**
   - Choose belt pitch based upon Design HP and RPM of faster shaft
5. **Select Smaller Sprocket:**
   - Look at Basic HP rating tables of belt Pitch selected in Step 4
   - Scan HP rating at RPM of faster shaft. (Pg. PT11-22 thru PT11-26)
   - Find sprocket size(s) that have HP rating at or above Design HP
6. **Calculate Drive Speed Ratio:**
   - Divide Fast Shaft RPM by Slow Shaft RPM
7. **Select Sprockets and Belt:**
   - Refer to "Ratio/Center Distance" Tables for Belt pitch chosen in Step 4. (Pg. PT11-35 - PT11-65)
   - Trace down left hand column to approximate ratio calculated in Step 6
   - Choose drive that has small sprocket at or above the number of teeth determined in Step 5
   - On this same line, trace to the right until the number closest to the required center distance is reached
   - Trace to the top of this column and note the belt size that gives this center distance
   - Also note the "Belt Length Correction Factor" at the top or bottom of this same column
8. **Finalize Selection**:
   - Multiply "Belt Length Correction Factor" times indicated rating obtained from HP table
   - Verify that Design HP is equal to or less than this corrected HP value
   - Note: If Correction Factor is greater than 1.0 corrected HP may allow selection of smaller less expensive drive
9. **Specify Drive:**
   - DriveR Sprocket and Bushing
   - DriveN Sprocket and Bushing
   - Belt
   - Verify that bushing bore has capacity for shaft size

Example

Step 1. Required Information: Select a HTR/HTRC drive to connect a 15HP APG gearmotor to a package conveyor headshaft. Reducer output is 125 RPM, shaft size is 2". Headshaft is 2-3/4" and is to run at 70 RPM. Center distance is 19-23", operation is 14 hrs/day.

Step 2: Service Factor: Package Conveyor requires 1.4 basic Service Factor. Add 0.3 for slow speed drive application (step 2 at left). Net S.F. = 1.7

Step 3. Design HP: 1.7 x 15 = 25.5 HP.

Step 4. Belt Pitch: Referring to page PT11-21, most probable belt pitch for 25.5 Des. HP at 125 RPM is 14MM.

Step 5. Select Small Sprocket: Scan 14MM HP Tables. Since there is no 125 RPM line, it will be necessary to interpolate. Start with the 100 RPM line. Observe that a 38 tooth sprocket for a 115MM wide belt gives 23.5 HP. Interpolation for 125 RPM gives 29.2 HP. Other alternatives are also available (see below)

Step 6. Drive Ratio: 125 / 70 RPM = 1.79:1

Step 7. Sprocket Selection: Refer to 14MM Ratio/Center Distance tables. For 1.79 ratio, note that there are 5 drive combinations in the 1.78 to 1.8 range. The 38 tooth DriveR and the 68 tooth DriveN combination appears to be good, however we need to account for the belt length correction factor of .95, which gives us a net design HP of 27.7. (Note 20.2" C.D. requires a 1778 length code belt)

Step 8. Finalize Selection: Select the 38 to 68 tooth combination with a 1778 length code belt for 20.2" C.D. From step 7, rated HP is 27.7

There are many optional drive selections. For drive verification or complete list of choices run ViaSync at www.ptwizard.com.

Step 9. Specify Drive:

Original Selection:

DriveR Sprocket: P38-14M-115-3020, P/N **114520** Bushing. 3020 x 2", **P/N 117118**

DriveN Sprocket: P68-14M-115-4545, P/N **114528** Bushing. 4545 x 2-3/4", P/N **117426**

Belt: 1778-14M-115 HT200 Belt, P/N **146602** Shaft capacity is verified by availability of bore sizes.

Selection program available online at ptwizard.com

FEATURES/BENEFITS PAGE PT11-2	SPECIFICATIONS PAGE PT11-4	ENGINEERING/TECHNICAL PAGE PT11-64	

SELECTION

Service Factors

Table 1

DriveN Machine	DriveR					
The driveN machines listed below are representative samples only. Select a driveN machine whose load characteristics most closely approximate those of the machine being considered.	AC Motors: Normal Torque, Squirrel Cage, Synchronous, Split Phase, Inverter Controlled DC Motors: Shunt Wound Stepper Motors Engines: Multiple Cylinder Internal Combustion			AC Motors: High Torque, High Slip, Repulsion-Induction, Single Phase, Series Wound, Slip Ring DC Motors: Series Wound, Compound Wound Servo Motors Engines: Single Cylinder Internal Combustion Line Shafts Clutches		
	Intermittent Service	Normal Service	Continuous Service	Intermittent Service	Normal Service	Continuous Service
	Up to 8 hours Daily or Seasonal	8 - 16 hours Daily	16 - 24 hours Daily	Up to 8 hours Daily or Seasonal	8 - 16 hours Daily	16 - 24 hours Daily
Display, Dispensing Equipment, Instrumentation, Measuring Equipment, Medical Equipment, Office, Projection Equipment	1.0	1.2	1.4	1.2	1.4	1.6
Appliances, Sweepers, Sewing Machines Screens, Oven Screens, Drum, Conical Woodworking Equipment (Light): Band Saws, Drills, Lathes	1.1	1.3	1.5	1.3	1.5	1.7
Agitators for Liquids, Conveyors: Belt, Light Package, Drill Press, Lathes, Saws, Laundry Machinery, Wood Working Equipment (Heavy): Circular Saws, Jointers, Planers	1.2	1.4	1.6	1.6	1.8	2.0
Agitators for Semi-Liquids, Compressor: Centrifugal, Conveyor Belt: Ore, Coal, Sand Dough Mixers, Line Shafts, Machine Tools: Grinder, Shaper, Boring Mill, Milling Machines, Paper Machinery (except Pulpers): Presses, Punches, Shears, Printing Machinery, Pumps: Centrifugal, Gear, Screens: Revolving, Vibratory	1.3	1.5	1.7	1.6	1.8	2.0
Brick Machinery (except Pug Mills) Conveyor: Apron, Pan, Bucket, Elevator, Extractors, Washers, Fans, Centrifugal Blowers, Generators & Exciters, Hoists, Rubber Calender, Mills, Extruders	1.4	1.6	1.8	1.8	2.0	2.2
Centrifuges, Screw Conveyors Hammer Mill, Paper Pulpers, Textile Machinery	1.5	1.7	1.9	1.9	2.1	2.3
Blowers: Positive Displacement, Mine Fans, Pulverizers	1.6	1.8	2.0	2.0	2.2	2.4
Compressors: Reciprocating, Crushers: Gyratory, Jaw, Roll, Mills: Ball, Rod, Pebble, etc., Pumps: Reciprocating Saw Mill Equipment	1.7	1.9	2.1	2.1	2.3	2.5

These service factors are adequate for most belt drive applications. Note that service factors cannot be substituted for good engineering judgment.
Service factors may be adjusted based upon an understanding of the severity of actual drive operation conditions.

Additional Service Factors

Low Speed Drives

8mm, 14,, & 20mm Belts Only	
Smaller Sprocket Speed	
Up to 200 rpm	Add 0.3
201 to 400 rpm	Add 0.2
401 to 600 rpm	Add 0.1
Each Idler	Add 0.2

Speed-up Drives

For speed up drives, add the basic service factor to the additional factor given below.

Speed-up Ratio Range	Additional Factor	Speed-up Ratio Range	Additional Factor
1 to 1.24	none	2.5 to 3.49	0.3
1.25 to 1.74	0.1	3.5 & over	0.4
1.75 to 2.49	0.2		

Unusual Conditions

Additional service factors are required for unusual conditions such a load reversal, heavy shock, plugged motor stop, electric brake. Consult factory or recommendation.

FEATURES/BENEFITS PAGE PT11-2 | SPECIFICATIONS PAGE PT11-4 | ENGINEERING/TECHNICAL PAGE PT11-64

SELECTION

Belt Pitch Selection Guide

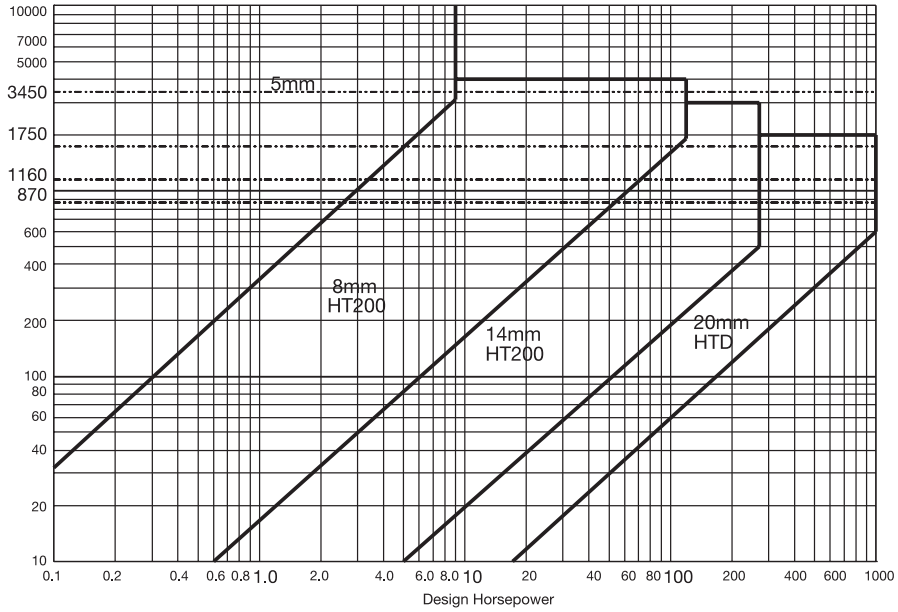

Synchronous belt drive noise increases as a function of Design Horsepower and operating RPM. This is indicated on the chart at the left. Provisions should be made to design drive guards for sound absorption accordingly.

Recommended Minimum Sprocket Diameters & Face Width
Synchronous Belt Drives Used On General Purpose Electric Motors

Motor Horse-power	Min. Sprocket Dia. (in.)				Maximum Face Width			
	870	1160	1750	3450	870	1160	1750	3450
1/2	2.0	-	-	-	2.25	-	-	-
3/4	2.16	2.0	-	-	2.25	2.25	-	
1	2.16	2.16	2.0	-	2.75	2.25	2.25	-
1-1/2	2.16	2.16	2.16	2.0	2.75	2.75	2.25	2.25
2	2.7	2.16	2.16	2.16	3.38	2.75	2.25	2.25
3	2.7	2.7	2.16	2.16	3.38	3.38	2.75	2.25
5	3.42	2.7	2.7	2.16	4.0	3.38	2.75	2.75
7-1/2	4.0	3.42	2.7	2.7	4.0	4.0	3.38	2.75
10	4.0	4.0	3.42	2.7	4.63	4.0	3.38	3.38
15	4.7	4.0	4.0	3.42	4.63	4.63	4.0	3.38
20	5.4	4.7	4.0	4.0	5.25	4.63	4.0	4.0
25	6.12	5.4	4.0	4.0	5.25	5.25	4.63	4.0
30	6.12	6.12	4.7	-	5.87	5.25	4.63	-
40	7.4	6.12	5.4	-	5.88	5.88	5.25	-
50	7.6	7.4	6.12	-	7.25	5.88	5.25	-
60	9.0	8.1	6.7	-	7.25	7.25	5.88	-
75	8.6	9.0	7.8	-	8.5	7.25	5.88	-
100	10.8	9.0	7.8	-	8.5	8.5	7.25	-
125	11.3	10.8	9.5	-	8.5	8.5	7.25	-
150	11.88	11.88	9.5	-	11.63	8.5	8.5	-
200	11.88	11.88	11.88	-	11.63	11.63	11.63	-
250	13.5	11.88	11.88	-	11.63	11.63	9.38	-
300	-	-	11.88	-	-	11.63	11.63	-
350	-	-	11.88	-	-	11.63	11.63	-
400	-	-	12.69	-	-	-	11.63	-

NOTE: For a given motor horsepower and speed, the total belt pull is related to the motor sprocket size. As this size **decreases**, the total belt pull **increases**. Therefore, to limit the resultant load on motor shaft and bearings, NEMA lists minimum sprocket sizes for the various motors. The sprocket on the motor (DriveR Sprocket) should be at least this large.

V-Drives
FHP Drives
Drive Component Accessories
DYNA-SYNC
HT200/HTD Synchronous Drives
HT500 Synchronous Drives
Roller Chain Sprockets

SELECTION

HT200 Basic Horsepower Rating

NOTE: Multiply rating by Belt Length Correction Factor from Ratio/Center Distance Tables

8M-20	Rated Horsepower for Small Sprocket (Number of Teeth and Pitch Diameter, Inches)															
RPM	22	24	26	28	30	32	34	36	38	40	44	48	56	64	72	80
Small Shaft	2.21	2.41	2.61	2.81	3.01	3.21	3.41	3.61	3.81	4.01	4.44	4.81	5.61	6.42	7.22	8.02
10	0.1	0.1	0.1	0.1	0.1	0.1	0.1	0.1	0.14	0.2	0.2	0.2	0.2	0.3	0.3	0.3
20	0.1	0.1	0.2	0.2	0.2	0.2	0.2	0.3	0.27	0.3	0.3	0.4	0.4	0.5	0.6	0.6
40	0.2	0.3	0.3	0.3	0.4	0.4	0.4	0.5	0.51	0.5	0.6	0.7	0.8	0.9	1.1	1.2
60	0.4	0.4	0.5	0.5	0.6	0.6	0.7	0.7	0.74	0.8	0.9	1.0	1.9	1.4	1.6	1.8
100	0.6	0.6	0.7	0.8	0.9	1.0	1.0	1.1	1.2	1.3	1.4	1.6	1.9	2.3	2.5	2.8
200	1.0	1.2	1.4	1.5	1.7	1.8	2.0	2.1	2.3	2.5	2.8	3.1	3.7	4.3	4.9	5.5
300	1.5	1.7	2.0	2.2	2.4	2.7	2.9	3.1	3.4	3.6	4.0	4.5	5.4	6.2	7.1	8.0
400	2.0	2.3	2.6	2.9	3.2	3.5	3.8	4.1	4.37	4.7	53	5.9	7.0	8.4	9.3	10.5
500	2.4	2.8	3.2	3.5	3.9	4.3	4.6	5.0	5.38	5.7	6.5	7.2	8.6	10.1	11.5	12.9
600	2.8	3.1	3.7	4.2	4.6	5.1	5.5	6.0	6.37	6.8	7.7	8.5	10.2	11.9	13.6	15.3
700	3.3	3.8	4.3	4.8	5.3	5.8	6.3	6.9	7.35	7.9	8.9	9.9	11.8	13.8	15.7	17.6
800	3.7	4.3	4.9	5.4	6.0	6.6	7.2	7.8	8.31	8.9	10.0	11.1	13.4	15.6	17.8	20.0
870	4.0	4.6	5.2	5.9	6.5	7.1	7.7	8.4	8.98	9.6	10.8	12.0	14.5	16.9	19.2	21.6
1000	4.5	5.2	5.9	6.7	7.4	8.1	8.8	9.5	10.2	10.9	12.3	13.7	16.5	19.2	21.9	24.5
1160	5.1	6.0	6.8	7.6	8.5	9.3	10.1	10.9	11.7	12.5	14.1	15.7	18.9	22.0	25.1	28.1
1200	5.3	6.2	7.0	7.9	8.7	9.6	10.4	11.2	12.1	12.9	14.6	16.2	19.5	22.7	25.9	29.0
1400	6.1	7.1	8.1	9.0	10.0	11.0	12.0	12.9	13.9	14.9	16.8	18.7	22.4	26.1	29.8	33.4
1600	6.8	8.0	9.1	10.2	11.3	12.4	13.5	14.6	15.7	16.8	19.0	21.1	25.3	29.5	33.6	37.7
1750	7.4	8.6	9.9	11.1	12.3	13.5	14.7	15.9	17.1	18.2	20.6	22.9	27.5	32.0	36.5	40.8
2000	8.4	9.7	11.1	12.5	13.9	15.2	16.6	17.9	19.3	20.6	23.2	25.8	31.0	36.1	41.1	45.9
2400	9.8	11.4	13.1	14.7	16.3	17.9	19.5	21.1	22.7	24.3	27.4	30.5	36.5	42.4	48.2	53.8
2800	11.2	13.1	15.0	16.9	18.7	20.6	22.4	24.2	26.0	27.8	31.4	34.9	41.8	48.5	54.9	61.2
3200	12.6	14.8	16.9	19.0	21.1	23.2	25.2	27.3	29.3	31.3	35.3	39.2	46.9	54.2	61.3	
3450	13.5	15.8	18.0	20.3	22.5	24.8	27.0	29.1	31.3	33.5	37.7	41.9	50.0	57.7	65.1	
4000	15.3	17.9	20.5	23.1	25.6	28.2	30.7	33.1	35.6	38.0	42.8	47.4	56.4			
4500	16.9	19.8	22.7	25.5	28.4	31.1	33.9	36.6	39.3	42.0	47.2	52.2				
5000	18.5	21.7	24.8	27.9	31.0	34.0	37.0	40.0	42.9	45.7	51.3	56.7				
5500	20.0	23.5	26.9	30.2	33.6	36.8	40.0	43.2	46.3	49.3	55.3					

8M-30	Rated Horsepower for Small Sprocket (Number of Teeth and Pitch Diameter, Inches)															
RPM	22	24	26	28	30	32	34	36	38	40	44	48	56	64	72	80
Small Shaft	2.21	2.41	2.61	2.81	3.01	3.21	3.41	3.61	3.81	4.01	4.44	4.81	5.61	6.42	7.22	8.02
10	0.1	0.1	0.1	0.2	0.2	0.2	0.2	0.2	0.2	0.2	0.3	0.3	0.3	0.4	0.5	0.5
20	0.2	0.2	0.3	0.3	0.3	0.3	0.4	0.4	0.4	0.4	0.5	0.6	0.7	0.8	0.9	1.0
40	0.4	0.4	0.5	0.5	0.6	0.6	0.7	0.8	0.8	0.9	1.0	1.1	1.3	1.5	1.7	1.9
60	0.5	0.6	0.7	0.8	0.9	0.9	1.0	1.1	1.2	1.3	1.4	1.6	1.9	2.2	2.5	2.8
100	0.9	1.0	1.1	1.3	1.4	1.5	1.6	1.8	1.9	2.0	2.3	2.5	3.0	3.5	4.0	4.5
200	1.6	1.9	2.1	2.4	2.6	2.9	3.1	3.4	3.6	3.8	4.3	4.8	5.8	6.7	7.6	8.6
300	2.4	2.7	3.1	3.5	3.8	4.2	4.5	4.9	5.3	5.6	6.3	7.0	8.4	9.8	11.2	12.5
400	3.1	3.6	4.0	4.5	5.0	5.5	5.9	6.4	6.9	7.3	8.3	9.2	11.0	12.8	14.6	16.4
500	3.8	4.4	5.0	5.5	6.1	6.7	7.3	7.9	8.5	9.0	10.2	11.3	13.6	15.8	18.0	20.2
600	4.5	5.2	5.9	6.6	7.3	7.9	8.6	9.3	10.0	10.7	12.0	13.4	16.1	18.7	21.4	24.0
700	5.1	5.9	6.7	7.5	8.4	9.2	10.0	10.7	11.5	12.3	13.9	15.5	18.6	21.6	24.7	27.7
800	5.8	6.7	7.6	8.5	9.4	10.3	11.2	12.1	13.0	13.9	15.7	17.5	21.0	24.5	27.9	31.4
870	6.2	7.2	8.2	9.2	10.2	11.2	12.2	13.1	14.1	15.1	17.0	18.9	22.7	26.5	30.2	33.9
1000	7.1	8.2	9.3	10.5	11.6	12.7	13.8	14.9	16.0	17.1	19.3	21.5	25.8	30.1	34.3	38.5
1160	8.1	9.4	10.7	12.0	13.3	14.5	15.8	17.1	18.4	19.6	22.2	24.7	29.6	34.5	39.4	44.2
1200	8.3	9.7	11.0	12.3	13.7	15.0	16.3	17.6	19.0	20.3	22.9	25.4	30.6	35.6	40.6	45.6
1400	9.5	11.1	12.7	14.2	15.7	17.3	18.8	20.3	21.8	23.3	26.3	29.3	35.2	41.0	46.8	52.4
1600	10.8	12.5	14.3	16.0	17.8	19.5	21.2	23.0	24.7	26.4	29.8	33.1	39.8	46.3	52.8	59.1
1750	11.6	13.6	15.5	17.4	19.3	21.2	23.0	24.9	26.8	28.6	32.3	36.0	43.2	50.3	57.2	64.1
2000	13.1	15.3	17.5	19.6	21.8	23.9	26.0	28.1	30.2	32.3	36.5	40.6	48.7	56.7	64.5	72.1
2400	15.4	18.0	20.5	23.1	25.6	28.1	30.7	33.1	35.6	38.1	43.0	47.8	57.3	66.6	75.6	84.4
2800	17.6	20.6	23.6	26.5	29.4	32.3	35.2	38.0	40.9	43.7	49.3	54.8	65.6	76.1	86.2	96.0
3200	19.8	23.2	26.5	29.8	33.1	36.4	39.6	42.8	46.0	49.2	55.4	61.6	73.6	85.2	96.2	
3450	21.1	24.7	28.3	31.9	35.4	38.9	42.3	45.8	49.2	52.5	59.2	65.7	78.4	90.6	102.2	
4000	24.0	28.1	32.2	36.2	40.3	44.2	48.1	52.0	55.9	59.7	67.1	74.5	88.5			
4500	26.6	31.1	35.6	40.1	44.5	48.9	53.2	57.5	61.7	65.9	74.0	82.0				
5000	29.0	34.0	39.0	43.8	48.7	53.4	58.1	62.8	67.3	71.8	80.6	89.1				
5500	31.4	36.8	42.2	47.5	52.7	57.8	62.9	67.8	72.7	77.5	86.8					

Operation in shaded area will result in a reduction of belt life.

FEATURES/BENEFITS PAGE PT11-2 | SPECIFICATIONS PAGE PT11-4 | ENGINEERING/TECHNICAL PAGE PT11-64

HT200 Basic Horsepower Rating

NOTE: Multiply rating by Belt Length Correction Factor from Ratio/Center Distance Tables

8M-50	Rated Horsepower for Small Sprocket (Number of Teeth and Pitch Diameter, Inches)															
RPM	22	24	26	28	30	32	34	36	38	40	44	48	56	64	72	80
Small Shaft	2.21	2.41	2.61	2.81	3.01	3.21	3.41	3.61	3.81	4.01	4.44	4.81	5.61	6.42	7.22	8.02
10	0.2	0.2	0.2	0.3	0.3	0.3	0.3	0.4	0.4	0.4	0.5	0.5	0.6	0.7	0.8	0.9
20	0.3	0.4	0.4	0.5	0.5	0.6	0.6	0.7	0.7	0.8	0.9	1.0	1.1	1.3	1.5	1.7
40	0.7	0.7	0.8	0.9	1.0	1.1	1.2	1.3	1.4	1.5	1.7	1.9	2.2	2.6	2.9	3.3
60	0.9	1.1	1.2	1.4	1.5	1.6	1.8	1.9	2.0	2.2	2.4	2.7	3.2	3.8	4.3	4.8
100	1.5	1.7	2.0	2.2	2.4	2.6	2.8	3.1	3.3	3.5	3.9	4.4	5.2	6.1	6.9	7.8
200	2.9	3.3	3.7	4.1	4.6	5.0	5.4	5.8	6.3	6.7	7.5	8.4	10.0	11.7	13.3	14.9
300	4.1	4.8	5.4	6.0	6.7	7.23	7.9	8.5	9.2	9.8	11.0	12.2	14.6	17.0	19.4	21.8
400	5.4	6.2	7.0	7.9	8.7	9.5	10.3	11.1	11.9	12.7	14.4	16.0	19.2	22.3	25.5	28.6
500	6.6	7.6	8.6	9.6	10.7	11.7	12.7	13.7	14.7	15.7	17.7	19.7	23.6	27.5	31.4	35.2
600	7.7	9.0	10.2	11.4	12.6	13.8	15.0	16.2	17.4	18.6	20.9	23.3	28.0	32.6	37.2	41.7
700	8.9	10.3	11.7	13.1	14.5	15.9	17.3	18.7	20.1	21.4	24.2	26.9	32.3	37.6	42.9	48.2
800	10.0	11.6	13.2	14.8	16.4	18.0	19.6	21.1	22.7	24.2	27.3	30.4	36.5	42.6	48.6	54.5
870	10.8	12.6	14.3	16.0	17.7	19.4	21.1	22.8	24.5	26.2	29.5	32.9	39.5	46.0	52.5	58.9
1000	12.3	14.2	16.2	18.2	20.1	22.1	24.0	25.9	27.9	29.8	33.6	37.4	44.9	52.4	59.7	67.0
1160	14.0	16.3	18.6	20.8	23.1	25.3	27.5	29.7	32.0	34.1	38.5	42.9	51.5	60.0	68.5	76.8
1200	14.4	16.8	19.1	21.5	23.8	26.1	28.4	30.7	33.0	35.2	39.8	44.2	53.1	61.9	70.6	79.2
1400	16.6	19.3	22.0	24.7	27.4	30.0	32.7	35.3	38.0	40.6	45.8	51.0	61.2	71.3	81.3	91.2
1600	18.7	21.8	24.8	27.9	30.9	33.9	36.9	39.9	42.9	45.9	51.8	57.6	69.2	80.6	91.8	102.9
1750	20.2	23.6	26.9	30.2	33.5	36.8	40.1	43.3	46.6	49.8	56.2	62.5	75.0	87.4	99.5	111.4
2000	22.8	26.6	30.3	34.1	37.8	41.5	45.2	48.9	52.6	56.2	63.4	70.6	84.7	98.5	112.1	125.4
2400	26.8	31.3	35.7	40.2	44.6	48.9	53.3	57.6	62.0	66.2	74.7	83.1	99.7	115.8	131.5	146.8
2800	30.7	35.8	41.0	46.1	51.2	56.2	61.2	66.2	71.1	76.0	85.7	95.3	114.1	132.3	149.9	166.9
3200	34.4	40.3	46.1	51.9	57.6	63.2	68.9	74.5	80.0	85.5	96.4	107.1	128.0	148.1	167.4	
3450	36.8	43.0	49.2	55.4	61.5	67.6	73.6	79.6	85.5	91.3	102.9	114.3	136.4	157.5	177.7	
4000	41.8	48.9	56.0	63.0	70.0	76.9	83.7	90.4	97.1	103.7	116.8	129.5	154.0			
4500	46.2	54.1	62.0	69.7	77.4	85.0	92.6	100.0	107.3	114.5	128.7	142.5				
5000	50.5	59.1	67.8	76.2	84.7	92.9	101.1	109.1	117.1	124.9	140.1	154.9				
5500	54.6	64.0	73.4	82.5	91.6	100.5	109.3	117.9	126.4	134.7	150.9					

8M-85	Rated Horsepower for Small Sprocket (Number of Teeth and Pitch Diameter, Inches)															
RPM	22	24	26	28	30	32	34	36	38	40	44	48	56	64	72	80
Small Shaft	2.21	2.41	2.61	2.81	3.01	3.21	3.41	3.61	3.81	4.01	4.44	4.81	5.61	6.42	7.22	8.02
10	0.3	0.4	0.4	0.4	0.5	0.5	0.6	0.6	0.7	0.7	0.8	0.9	1.0	1.2	1.4	1.5
20	0.6	0.7	0.8	0.8	0.9	1.0	1.1	1.2	1.3	1.3	1.5	1.7	2.0	2.3	2.6	3.0
40	1.1	1.3	1.5	1.6	1.8	1.9	2.1	2.3	2.4	2.6	2.9	3.2	3.8	4.5	5.1	5.7
60	1.6	1.9	2.1	2.4	2.6	2.8	3.1	3.3	3.5	3.8	4.2	4.7	5.6	6.5	7.4	8.3
100	2.6	3.0	3.4	3.8	4.2	4.6	4.9	5.3	5.7	6.1	6.8	7.6	9.1	10.6	12.0	13.5
200	5.0	5.7	6.5	7.2	8.0	8.7	9.4	10.2	10.9	11.6	13.1	14.5	17.4	20.3	23.1	25.9
300	7.2	8.3	9.4	10.5	11.6	12.7	13.7	14.8	15.9	17.0	19.1	21.2	25.5	29.7	33.8	38.0
400	9.3	10.8	12.2	13.7	15.1	16.5	17.9	19.4	20.8	22.2	25.0	27.8	33.3	38.8	44.3	49.7
500	11.4	13.2	15.0	16.8	18.5	20.3	22.1	23.8	25.6	27.3	30.8	34.2	41.0	47.8	54.6	61.2
600	13.5	15.6	17.7	19.8	21.9	24.0	26.1	28.2	30.3	32.3	36.4	40.5	48.6	56.7	64.7	72.6
700	15.5	17.9	20.4	22.8	25.3	27.7	30.1	32.5	34.9	37.3	42.0	46.8	56.1	65.4	74.7	83.8
800	17.5	20.2	23.0	25.8	28.6	31.3	34.0	36.8	39.5	42.2	47.6	52.9	63.6	74.1	84.5	94.9
870	18.8	21.8	24.9	27.8	30.8	33.8	36.8	39.7	42.7	45.6	51.4	57.2	68.7	80.1	91.4	102.5
1000	21.3	24.8	28.2	31.6	35.0	38.4	41.8	45.1	48.5	51.8	58.5	65.1	78.2	91.1	103.9	116.6
1160	24.4	28.3	32.3	36.2	40.1	44.0	47.9	51.7	55.6	59.4	67.0	74.6	89.6	104.5	119.1	133.6
1200	25.1	29.2	33.3	37.3	41.4	45.4	49.4	53.4	57.4	61.3	69.2	77.0	92.5	107.8	122.9	137.8
1400	28.9	33.6	38.3	43.0	47.6	52.3	56.9	61.5	66.1	70.6	79.7	88.7	106.5	124.1	141.5	158.6
1600	32.5	37.9	43.2	48.5	53.8	59.0	64.3	69.4	74.6	79.8	90.1	100.2	120.4	140.2	159.7	179.0
1750	35.2	41.0	46.8	52.6	58.3	64.0	69.7	75.4	81.0	86.6	97.7	108.8	130.6	152.0	173.1	193.9
2000	39.6	46.2	52.8	59.3	65.8	72.3	78.7	85.1	91.4	97.8	110.3	122.8	147.3	171.4	195.0	218.2
2400	46.6	54.4	62.2	69.9	77.6	85.2	92.8	100.3	107.8	115.2	130.0	144.6	173.4	201.4	228.8	255.4
2800	53.3	62.3	71.3	80.2	89.0	97.8	106.5	115.1	123.7	132.3	149.2	165.9	198.5	230.2	260.9	290.5
3200	59.9	70.1	80.2	90.2	100.2	110.0	119.9	129.6	139.3	148.8	167.7	186.4	222.7	257.6	291.2	
3450	64.0	74.9	85.7	96.4	107.0	117.6	128.1	138.4	148.7	158.9	179.1	198.8	237.3	274.1	309.1	
4000	72.7	85.1	97.5	109.6	121.8	133.7	145.6	157.4	169.0	180.5	203.1	225.3	267.9			
4500	80.3	94.1	107.8	121.3	134.7	147.9	161.0	173.9	186.7	199.3	224.0	248.0				
5000	87.8	102.9	117.9	132.7	147.3	161.7	175.9	189.9	203.7	217.3	243.8	269.4				
5500	95.0	111.4	127.7	143.6	159.4	174.9	190.2	205.2	220.0	234.4	262.5					

Operation in shaded area will result in a reduction of belt life.

FEATURES/BENEFITS PAGE PT11-2
SPECIFICATIONS PAGE PT11-4
ENGINEERING/TECHNICAL PAGE PT11-64

SELECTION

HT200 Basic Horsepower Rating

NOTE: Multiply rating by Belt Length Correction Factor from Ratio/Center Distance Tables

14M-40	Rated Horsepower for Small Sprocket (Number of Teeth and Pitch Diameter, Inches)																
RPM	**28**	**29**	**30**	**32**	**34**	**36**	**38**	**40**	**44**	**48**	**52**	**56**	**60**	**64**	**68**	**72**	**80**
Small Shaft	**4.91**	**5.09**	**5.26**	**5.61**	**5.97**	**6.32**	**6.67**	**7.02**	**7.72**	**8.42**	**9.12**	**9.83**	**10.53**	**11.23**	**11.93**	**12.63**	**14.04**
10	0.6	0.6	0.6	0.7	0.7	0.7	0.8	0.8	0.9	1.0	1.1	1.2	1.3	1.4	1.5	1.6	1.7
20	1.1	1.1	1.2	1.2	1.3	1.4	1.5	1.6	1.7	1.9	2.1	2.3	2.4	2.6	2.8	2.9	3.3
40	2.2	2.2	2.3	2.5	2.6	2.8	2.9	3.1	3.4	3.7	4.0	4.3	4.6	5.0	5.3	5.6	6.2
60	3.2	3.4	3.5	3.7	3.9	4.2	4.4	4.6	5.1	5.6	6.0	6.5	7.0	7.4	7.9	8.4	9.3
100	5.4	5.6	5.8	6.2	6.6	7.0	7.4	7.7	8.5	9.3	10.0	10.8	11.6	12.4	13.1	13.9	15.5
200	10.1	10.5	10.9	11.8	12.7	13.5	14.4	15.3	17.0	18.5	20.1	21.6	23.2	24.7	26.3	27.8	30.9
300	13.6	14.2	14.8	15.9	17.2	18.3	19.6	20.8	23.2	25.7	28.3	30.9	33.5	36.1	38.8	41.5	46.3
400	16.9	17.6	18.3	19.8	21.3	22.7	24.2	25.8	28.8	31.9	35.0	38.3	41.5	44.8	48.1	51.4	58.2
500	20.0	20.8	21.7	23.4	25.1	26.9	28.6	30.4	34.01	37.7	41.4	45.2	49.0	52.8	56.7	60.6	68.6
600	22.9	23.9	24.8	26.8	28.8	30.8	32.8	34.8	39.0	43.1	47.4	51.7	56.1	60.4	64.9	69.3	78.4
700	25.7	26.8	27.8	30.0	32.3	34.5	36.8	39.1	43.7	48.3	53.1	57.9	62.8	67.7	72.6	77.6	87.7
800	28.4	29.6	30.7	33.2	35.7	38.1	40.6	43.1	48.2	53.3	58.5	63.9	69.2	74.6	80.0	85.4	96.4
870	30.2	31.5	32.7	35.3	38.0	40.6	43.2	45.9	51.3	56.7	62.2	67.9	73.5	79.2	85.0	90.6	102.3
1000	33.5	34.9	36.3	39.3	42.3	45.3	48.3	51.2	57.1	62.8	68.8	75.0	81.2	87.4	94.0	99.9	112.6
1160	37.7	39.4	41.1	44.6	48.0	51.4	54.8	58.1	64.7	71.2	77.6	84.0	90.2	96.9	103.7	110.6	124.3
1200	38.7	40.6	42.3	45.9	49.4	52.9	56.4	59.8	66.6	73.3	79.9	86.4	92.8	99.2	106.1	113.1	127.1
1400	44.1	46.2	48.2	52.3	56.3	60.3	64.2	68.1	75.8	83.4	90.8	98.1	105.3	112.3	119.2	126.0	139.9
1600	49.3	51.6	53.9	58.4	62.9	67.3	71.7	76.1	84.7	93.1	101.3	109.4	117.2	125.0	132.5	139.8	154.0
1750	53.1	55.5	58.0	62.9	67.7	72.5	77.2	81.9	91.1	100.1	108.9	117.4	125.8	134.0	141.9	149.6	164.3
2000	59.2	61.9	64.7	70.1	75.5	80.8	86.1	91.3	101.4	111.3	120.9	130.2	139.3	148.0	156.5		
2400	68.5	71.7	74.9	81.2	87.3	93.4	99.4	105.3	116.8	127.9	138.6	148.8					
2800	77.3	80.9	84.4	91.5	98.4	105.2	111.8	118.3	130.9	142.9							
3200	85.5	89.5	93.4	101.1	108.6	116.0	123.2	130.1	143.5								
3600	93.2	97.5	101.7	110.0	118.1	125.9	133.5										
4000	100.4	105.0	109.5	118.2	126.7	134.8											

14M-55	Rated Horsepower for Small Sprocket (Number of Teeth and Pitch Diameter, Inches)																
RPM	**28**	**29**	**30**	**32**	**34**	**36**	**38**	**40**	**44**	**48**	**52**	**56**	**60**	**64**	**68**	**72**	**80**
Small Shaft	**4.91**	**5.09**	**5.26**	**5.61**	**5.97**	**6.32**	**6.67**	**7.02**	**7.72**	**8.42**	**9.12**	**9.83**	**10.53**	**11.23**	**11.93**	**12.63**	**14.04**
10	0.8	0.9	0.9	1.0	1.0	1.1	1.2	1.3	1.4	1.5	1.7	1.8	1.9	2.1	2.2	2.3	2.6
20	1.6	1.6	1.7	1.8	2.0	2.1	2.2	2.4	2.6	2.9	3.1	3.4	3.6	3.9	4.1	4.4	4.9
40	3.1	3.2	3.3	3.6	3.8	4.0	4.2	4.5	4.9	5.4	5.9	6.4	6.8	7.3	7.8	8.2	9.2
60	4.7	4.8	5.0	5.3	5.7	6.0	6.4	6.7	7.4	8.0	8.7	9.4	10.0	10.7	11.4	12.0	13.4
100	7.8	8.1	8.3	8.9	9.5	10.0	10.6	11.1	12.3	13.4	14.5	15.6	16.7	17.8	18.9	20.0	22.3
200	14.5	15.1	15.7	17.0	18.2	19.5	20.8	22.1	24.5	26.7	28.9	31.2	33.4	35.6	37.8	40.1	44.5
300	19.6	20.5	21.3	23.0	24.7	26.4	28.2	29.9	33.5	37.1	40.7	44.5	48.2	52.0	55.9	59.7	66.7
400	24.3	25.4	26.4	28.4	30.6	32.8	34.9	37.1	41.5	46.0	50.5	55.4	59.8	64.5	69.2	74.0	83.8
500	28.8	30.0	31.2	33.7	36.2	38.7	41.3	43.8	49.0	54.3	59.6	65.1	70.6	76.1	81.7	87.3	98.9
600	33.0	34.4	35.8	38.6	41.5	44.4	47.3	50.2	56.2	62.2	68.3	74.5	80.8	87.1	93.5	99.9	113.0
700	37.0	38.6	40.1	43.3	46.5	49.8	53.0	56.3	62.9	69.7	76.5	83.5	90.5	97.5	104.6	111.8	126.4
800	41.2	43.1	45.0	48.7	52.4	56.1	59.8	63.5	70.7	77.8	84.8	92.1	99.7	107.5	115.2	123.1	139.0
870	44.2	46.3	48.3	52.4	56.4	60.3	64.3	68.2	76.0	83.6	91.2	98.7	106.0	114.2	122.4	130.7	147.5
1000	49.8	52.1	54.4	59.0	63.5	68.0	72.4	76.9	85.6	94.2	102.7	111.1	119.4	127.6	135.6	144.1	162.5
1160	56.5	59.1	61.7	66.9	72.0	77.1	82.2	87.2	97.1	106.9	116.5	125.9	135.3	144.5	153.5	162.4	179.8
1200	58.1	60.8	63.5	68.8	74.1	79.4	84.6	89.7	99.9	110.0	119.8	129.6	139.1	148.6	157.8	167.0	184.8
1400	66.1	69.2	72.3	78.4	84.4	90.4	96.3	102.2	113.7	125.1	136.2	147.2	158.0	168.5	178.9	189.0	208.7
1600	73.9	77.4	80.8	87.6	94.3	101.0	107.6	114.2	127.0	139.6	152.0	164.0	175.9	187.4	198.7	209.7	231.0
1750	79.6	83.3	87.0	94.3	101.6	108.8	115.9	122.9	136.7	150.1	163.3	176.2	188.7	200.9	212.8	224.4	246.5
2000	88.7	92.9	97.0	105.2	113.3	121.3	129.1	136.9	152.1	166.9	181.3	195.3	208.9	222.0	234.7		
2400	102.7	107.5	112.3	121.7	131.0	140.2	149.1	158.0	175.2	191.9	207.9	223.3					
2800	115.9	121.3	126.7	137.2	147.6	157.7	167.7	177.5	196.3	214.3							
3200	128.3	134.2	140.1	151.7	163.0	174.0	184.7	195.2	215.3								
3600	139.8	146.3	152.6	165.0	177.1	188.8	200.2										
4000	150.6	157.5	164.2	177.3	190.0	202.2											

Operation in shaded area will result in a reduction of belt life

FEATURES/BENEFITS PAGE PT11-2 | SPECIFICATIONS PAGE PT11-4 | ENGINEERING/TECHNICAL PAGE PT11-64

HT200 Basic Horsepower Rating

14M-85	Rated Horsepower for Small Sprocket (Number of Teeth and Pitch Diameter, Inches)																
RPM Small Shaft	28 4.91	29 5.09	30 5.26	32 5.61	34 5.97	36 6.32	38 6.67	40 7.02	44 7.72	48 8.42	52 9.12	56 9.82	60 10.53	64 11.23	68 11.93	72 12.63	80 14.04
10	1.4	1.5	1.5	1.6	1.7	1.9	2.0	2.1	2.3	2.5	2.8	3.0	3.2	3.4	3.6	3.9	4.3
20	2.6	2.7	2.8	3.1	3.3	3.5	3.7	3.9	4.4	4.8	5.2	5.6	6.1	6.5	6.9	7.3	8.1
40	4.9	5.1	5.3	5.7	6.1	6.6	7.0	7.4	8.2	9.0	9.8	10.6	11.4	12.2	13.0	13.7	15.3
60	7.0	7.3	7.6	8.3	8.9	9.5	10.0	10.6	11.8	13.0	14.1	15.3	16.4	17.6	18.7	19.8	22.1
100	11.1	11.6	12.1	13.0	14.0	15.0	15.9	16.8	18.7	20.6	22.4	24.3	26.1	27.9	29.7	31.5	35.0
200	20.5	21.5	22.4	24.2	26.0	27.8	29.5	31.3	34.8	38.3	41.7	45.2	48.6	51.9	55.3	58.6	65.2
300	29.3	30.7	32.0	34.6	37.2	39.7	42.3	44.8	49.9	54.9	59.9	64.8	69.7	74.5	79.3	84.1	93.6
400	37.7	39.4	41.1	44.5	47.8	51.2	54.5	57.8	64.3	70.8	77.2	83.6	89.9	96.1	102.3	108.5	120.7
500	45.8	47.9	49.9	54.1	58.2	62.2	66.3	70.3	78.3	86.1	93.9	101.7	109.3	116.9	124.5	131.9	146.7
600	53.6	56.1	58.5	63.3	68.2	72.9	77.7	82.4	91.8	101.0	110.2	119.2	128.2	137.1	145.9	154.7	171.9
800	68.6	71.8	74.9	81.2	87.4	93.6	99.7	105.8	117.8	129.6	141.4	153.0	164.5	175.8	187.1	198.2	220.1
870	73.7	77.2	80.5	87.3	93.9	100.6	107.1	113.7	126.6	139.4	152.0	164.4	176.7	188.9	200.9	212.8	236.2
1000	83.0	86.9	90.7	98.3	105.8	113.3	120.7	128.1	142.7	157.0	171.2	185.2	199.0	212.6	226.1	239.3	265.4
1160	94.1	98.5	102.9	111.5	120.1	128.6	137.0	145.3	161.9	178.1	194.1	209.9	225.4	240.8	255.8	270.7	299.7
1200	96.9	101.4	105.8	114.7	123.6	132.3	141.0	149.6	166.6	183.3	199.7	215.9	231.9	247.6	263.1	278.3	308.0
1400	110.2	115.4	120.5	130.6	140.7	150.6	160.5	170.3	189.6	208.5	227.1	245.3	263.3	280.9	298.1	315.1	347.9
1600	123.2	129.0	134.7	146.0	157.2	168.4	179.4	190.3	211.7	232.7	253.3	273.4	293.1	312.4	331.2	349.6	385.0
1750	132.6	138.8	145.0	157.2	169.3	181.3	193.1	204.8	227.8	250.2	272.2	293.6	314.5	334.9	354.7	374.0	410.8
2000	147.9	154.9	161.7	175.3	188.8	202.1	215.2	228.1	253.5	278.2	302.2	325.6	348.2	370.1	391.2		
2400	171.2	179.2	187.2	202.9	218.4	233.6	248.6	263.3	292.1	319.8	346.5	372.1					
2800	193.2	202.2	211.1	228.7	246.0	262.9	279.5	295.8	327.2	357.2							
3200	213.8	223.7	233.5	252.8	271.6	290.0	307.9	325.4	358.8								
3600	233.1	243.8	254.4	275.1	295.2	314.7	333.7										
4000	251.0	262.4	273.6	295.5	316.7	337.1											

14M-115	Rated Horsepower for Small Sprocket (Number of Teeth and Pitch Diameter, Inches)																
RPM Small Shaft	28 4.91	29 5.09	30 5.26	32 5.61	34 5.97	36 6.32	38 6.67	40 7.02	44 7.72	48 8.42	52 9.12	56 9.82	60 10.53	64 11.23	68 11.93	72 12.63	80 14.04
10	1.9	2.0	2.1	2.3	2.4	2.6	2.8	2.9	3.2	3.6	3.9	4.2	4.5	4.8	5.1	5.4	6.0
20	3.7	3.8	4.0	4.3	4.6	4.9	5.2	5.5	6.1	6.7	7.3	7.9	8.5	9.1	9.6	10.2	11.4
40	6.8	7.1	7.4	8.0	8.6	9.2	9.8	10.3	11.5	12.6	13.7	14.8	15.9	17.0	18.1	19.2	21.4
60	9.9	10.3	10.7	11.5	12.4	13.2	14.1	14.9	16.5	18.2	19.8	21.4	23.0	24.6	26.2	27.8	30.9
100	15.5	16.2	16.9	18.3	19.6	20.9	22.3	23.6	26.2	28.8	31.4	34.0	36.5	39.1	41.6	44.1	49.0
200	28.8	30.0	31.3	33.8	36.4	38.9	41.3	43.8	48.7	53.6	58.4	63.2	68.0	72.7	77.4	82.1	91.3
300	41.1	42.9	44.7	48.4	52.0	55.6	59.2	62.8	69.9	76.9	83.8	90.7	97.5	104.3	111.1	117.8	131.0
400	52.8	55.2	57.6	62.3	67.0	71.7	76.3	80.9	90.1	99.1	108.1	117.0	125.8	134.6	143.2	151.8	168.9
500	64.1	67.0	69.9	75.7	81.4	87.1	92.8	98.4	109.6	120.6	131.5	142.3	153.1	163.7	174.2	184.7	205.4
600	75.1	78.5	81.9	88.7	95.4	102.1	108.8	115.4	128.5	141.4	154.2	166.9	179.5	192.0	204.3	216.5	240.7
800	96.1	100.5	104.9	113.7	122.4	131.0	139.5	148.1	164.9	181.5	197.9	214.2	230.3	246.2	261.9	277.4	308.1
870	103.2	108.0	112.7	122.2	131.5	140.8	150.0	159.1	177.3	195.1	212.8	230.2	247.4	264.5	281.3	298.0	330.7
1000	116.2	121.6	127.0	137.6	148.2	158.6	169.0	179.3	199.7	219.8	239.7	259.2	278.6	297.7	316.5	335.1	371.6
1160	131.8	137.9	144.0	156.1	168.1	180.0	191.8	203.5	226.6	249.3	271.8	293.8	315.6	337.1	358.1	379.0	419.6
1200	135.6	141.9	148.2	160.6	173.0	185.2	197.4	209.4	233.2	256.6	279.6	302.3	324.7	346.7	368.3	389.6	431.2
1400	154.3	161.5	168.7	182.9	197.0	210.9	224.7	238.4	265.4	291.9	317.9	343.5	368.6	393.2	417.4	441.1	487.1
1600	172.5	180.5	188.5	204.4	220.1	235.7	251.1	266.4	296.4	325.8	354.6	382.8	410.4	437.4	463.7	489.4	538.9
1750	185.7	194.4	203.0	220.1	237.0	253.8	270.3	286.7	318.9	350.3	381.0	411.0	440.3	468.8	496.6	523.5	575.1
2000	207.1	216.8	226.4	245.5	264.3	282.9	301.3	319.4	354.9	389.5	423.1	455.8	487.4	518.1	547.7		
2400	239.7	250.9	262.0	284.0	305.7	327.0	348.0	368.7	408.9	447.7	485.1	521.0					
2800	270.4	283.1	295.5	320.2	344.4	368.1	391.3	414.1	458.1	500.1							
3200	299.3	313.2	326.9	353.9	380.2	406.0	431.1	455.5	502.4								
3600	326.3	341.3	356.1	385.1	413.3	440.6	467.1										
4000	351.4	367.4	383.1	413.7	443.3	471.9											

Operation in shaded area will result in a reduction of belt life.

V-Drives
FHP Drives
Drive Component Accessories
DYNA-SYNC
HT200/HTD Synchronous Drives
HT500 Synchronous Drives
Roller Chain Sprockets

SELECTION

HT200 Basic Horsepower Rating

NOTE: Multiply rating by Belt Length Correction Factor from Ratio/Center Distance Tables

14M-170	Rated Horsepower for Small Sprocket (Number of Teeth and Pitch Diameter, Inches)																
RPM	**28**	**29**	**30**	**32**	**34**	**36**	**38**	**40**	**44**	**48**	**52**	**56**	**60**	**64**	**68**	**72**	**80**
Small Shaft	**4.91**	**5.09**	**5.26**	**5.61**	**5.97**	**6.32**	**6.67**	**7.02**	**7.72**	**8.42**	**9.12**	**9.82**	**10.53**	**11.23**	**11.93**	**12.63**	**14.04**
10	3.0	3.1	3.2	3.5	3.7	3.9	4.2	4.4	4.9	5.4	5.9	6.4	6.8	7.3	7.8	8.2	9.2
20	5.6	5.8	6.0	6.5	7.0	7.4	7.9	8.4	9.3	10.2	11.1	12.0	12.9	13.8	14.6	15.5	17.3
40	10.4	10.8	11.3	12.2	13.1	13.9	14.8	15.7	17.4	19.1	20.8	22.5	24.2	25.9	27.6	29.2	32.5
60	15.0	15.6	16.3	17.6	18.8	20.1	21.4	22.6	25.1	27.6	30.1	32.6	35.0	37.4	39.8	42.2	47.0
100	23.6	24.7	25.7	27.8	29.8	31.8	33.8	35.9	39.8	43.8	47.7	51.6	55.5	59.4	63.2	67.0	74.5
200	43.7	45.6	47.6	51.4	55.3	59.1	62.8	66.6	74.1	81.5	88.8	96.1	103.4	110.5	117.7	124.8	138.8
300	62.4	65.2	68.0	73.6	79.1	84.6	90.0	95.4	106.2	116.8	127.4	137.9	148.3	158.6	168.8	179.0	199.1
400	80.3	83.9	87.5	94.7	101.8	108.9	116.0	123.0	136.9	150.6	164.3	177.8	191.2	204.5	217.7	230.8	256.8
500	97.4	101.9	106.3	115.0	123.8	132.4	141.0	149.6	166.5	183.3	199.9	216.3	232.7	248.8	264.8	280.8	312.2
600	114.1	119.3	124.5	134.8	145.0	155.2	165.3	175.4	195.3	214.9	234.4	253.7	272.8	291.8	310.5	329.1	365.9
800	146.1	152.8	159.5	172.8	186.0	199.1	212.1	225.0	250.6	275.9	300.9	325.6	350.0	374.2	398.0	421.7	468.3
870	156.9	164.2	171.4	185.7	199.9	214.0	228.0	241.9	269.4	296.6	323.4	349.9	376.1	402.0	427.6	452.9	502.7
1000	176.7	184.9	193.0	209.2	225.2	241.1	256.9	272.6	303.6	334.1	364.3	394.1	423.4	452.4	481.0	509.3	564.8
1160	200.3	209.7	218.9	237.3	255.5	273.6	291.5	309.3	344.4	379.0	413.1	446.7	479.7	512.3	544.4	576.0	637.8
1200	206.1	215.7	225.2	244.2	262.9	281.6	300.0	318.3	354.4	390.0	425.0	459.5	493.5	526.9	559.8	592.2	655.5
1400	234.6	245.5	256.4	278.0	299.4	320.6	341.6	362.4	403.4	443.6	483.2	522.1	560.2	597.7	634.4	670.4	740.4
1600	262.1	274.4	286.6	310.7	334.6	358.3	381.7	404.9	450.5	495.2	539.0	581.8	623.8	664.8	704.8	743.9	819.2
1750	282.2	295.5	308.6	334.6	360.3	385.8	410.9	435.8	484.7	532.5	579.2	624.8	669.3	712.6	754.8	795.8	874.2
2000	314.7	329.5	344.1	373.1	401.8	430.0	457.9	485.5	539.5	592.0	643.1	692.8	740.9	787.5	832.4		
2400	364.3	381.4	398.3	431.7	464.7	497.1	529.0	560.3	621.5	680.5	737.3	791.9					
2800	411.0	430.3	449.2	486.7	523.4	559.5	594.8	629.4	696.3	760.1							
3200	454.9	476.1	496.9	537.9	578.0	617.1	655.2	692.4	763.6								
3600	496.0	518.8	541.3	585.3	628.2	669.7	710.0										
4000	534.2	558.5	582.3	628.9	673.9	717.3											

Operation in shaded area will result in a reduction of belt life.

FEATURES/BENEFITS PAGE PT11-2
SPECIFICATIONS PAGE PT11-4
ENGINEERING/TECHNICAL PAGE PT11-64

HT100 Basic Horsepower Rating

NOTE: Multiply rating by Belt Length Correction Factor from Ratio/Center Distance Tables

5M-15	Rated Horsepower for Small Sprocket (Number of Grooves and Pitch Diameter, Inches)													
RPM Small Shaft	32 2.0	34 2.1	36 2.3	38 2.38	40 2.5	44 2.8	45 2.8	48 3.0	50 3.1	52 3.3	56 3.5	60 3.8	64 4.0	68 4.2
10	0.03	0.03	0.03	0.04	0.04	0.04	0.04	0.1	0.1	0.1	0.1	0.1	0.1	0.1
20	0.1	0.1	0.1	0.1	0.1	0.1	0.1	0.1	0.1	0.1	0.1	0.1	0.1	0.1
40	0.1	0.1	0.1	0.1	0.1	0.2	0.2	0.2	0.2	0.2	0.2	0.2	0.2	0.3
60	0.2	0.2	0.2	0.2	0.2	0.2	0.2	0.3	0.3	0.3	0.3	0.3	0.4	0.4
100	0.2	0.3	0.3	0.3	0.3	0.4	0.4	0.4	0.4	0.4	0.5	0.5	0.6	0.6
200	0.4	0.5	0.5	0.6	0.6	0.7	0.7	0.7	0.8	0.8	0.6	1.0	1.0	1.1
300	0.6	0.7	0.8	0.8	0.9	1.0	1.0	1.1	1.1	1.2	1.3	1.4	1.5	1.6
400	0.8	0.9	1.0	1.0	1.1	1.3	1.3	1.4	1.5	1.5	1.7	1.8	1.9	2.1
500	1.0	1.1	1.2	1.3	1.4	1.5	1.6	1.7	1.8	1.9	2.0	2.2	2.4	2.5
600	1.2	1.3	1.4	1.5	1.6	1.8	1.8	2.0	2.1	2.2	2.4	2.6	2.8	3.0
800	1.5	1.6	1.8	1.9	2.1	2.3	2.4	2.6	2.7	2.8	3.1	3.4	3.6	3.9
1000	1.8	2.0	2.2	2.3	2.5	2.8	2.9	3.1	3.3	3.5	3.8	4.1	4.4	4.7
1200	2.1	2.3	2.5	2.7	2.9	3.3	3.4	3.7	3.9	4.1	4.4	4.8	5.2	5.6
1400	2.4	2.7	2.9	3.1	3.3	3.8	3.9	4.2	4.4	4.7	5.1	5.5	5.9	6.3
1600	2.7	3.0	3.3	3.5	3.8	4.3	4.4	4.7	5.0	5.2	5.7	6.2	6.7	7.1
1800	3.0	3.3	3.6	3.9	4.2	4.7	4.8	5.3	5.5	5.8	6.3	6.9	7.4	7.9
2000	3.3	3.6	3.9	4.2	4.6	5.2	5.3	5.8	6.1	6.3	6.9	7.5	8.1	8.6
2400	3.9	4.2	4.6	5.0	5.3	6.0	6.2	6.7	7.1	7.4	8.1	8.8	9.4	10.1
2800	4.4	4.8	5.2	5.6	6.0	6.9	7.1	7.6	8.0	8.4	9.2	10.0	10.7	11.4
3200	4.9	5.4	5.8	6.3	6.6	7.7	7.9	8.5	9.0	9.4	10.2	11.1	11.9	12.7
3600	5.4	5.9	6.4	6.9	7.4	8.4	8.7	9.4	10.0	10.3	11.3	12.2	13.0	13.9
4000	5.9	6.4	7.0	7.5	8.1	9.2	9.4	10.2	10.7	11.2	12.2	13.2	14.1	15.0
5000	7.0	7.7	8.3	9.0	9.6	10.9	11.2	12.1	12.6	13.2	14.3	15.4	16.4	17.4
6000	8.0	8.8	9.5	10.2	11.0	12.3	12.7	13.7	14.3	14.9	16.1	17.1	18.1	
8000	9.7	10.6	11.5	12.3	13.1	14.6	14.9	15.9	16.6					
10000	10.9	11.8	12.7	13.6	14.4									
12000	11.5													
14000														

5M-25	Rated Horsepower for Small Sprocket (Number of Grooves and Pitch Diameter, Inches)													
RPM Small Shaft	32 2.0	34 2.1	36 2.3	38 2.38	40 2.5	44 2.8	45 2.8	48 3.0	50 3.1	52 3.3	56 3.5	60 3.8	64 4.0	68 4.2
10	0.1	0.1	0.1	0.1	0.1	0.1	0.1	0.1	0.1	0.1	0.1	0.1	0.1	0.1
20	0.1	0.1	0.1	0.1	0.1	0.1	0.1	0.2	0.2	0.2	0.2	0.2	0.2	0.22
40	0.2	0.2	0.2	0.2	0.2	0.3	0.3	0.3	0.3	0.3	0.4	0.4	0.4	0.42
60	0.3	0.3	0.3	0.3	0.3	0.4	0.4	0.4	0.4	0.5	0.5	0.5	0.6	0.62
100	0.4	0.4	0.5	0.5	0.5	0.6	0.6	0.7	0.7	0.7	0.8	0.9	0.9	0.98
200	0.7	0.8	0.9	0.9	1.0	1.1	1.2	1.2	1.3	1.4	1.5	1.6	1.7	1.85
300	1.1	1.2	1.2	1.3	1.4	1.6	1.7	1.8	1.9	2.0	2.2	2.3	2.5	2.67
400	1.4	1.5	1.6	1.7	1.8	2.1	2.1	2.3	2.4	2.6	2.8	3.0	3.2	3.47
500	1.7	1.8	2.0	2.1	2.3	2.5	2.6	2.8	3.0	3.1	3.4	3.7	4.0	4.24
600	2.0	2.1	2.3	2.5	2.6	3.0	3.1	3.3	3.5	3.7	4.0	4.3	4.7	4.99
800	2.5	2.7	3.0	3.2	3.4	3.9	4.0	4.3	4.5	4.7	5.2	5.6	6.0	6.46
1000	3.0	3.3	3.6	3.9	4.2	4.7	4.8	5.2	5.5	5.8	6.3	6.8	7.35	7.87
1200	3.6	3.9	4.2	4.6	4.9	5.5	5.7	6.2	6.5	6.8	7.4	8.0	8.64	9.25
1400	4.1	4.5	4.8	5.2	5.6	6.3	6.5	7.0	7.4	7.8	8.48	9.2	9.89	10.6
1600	4.6	5.0	5.4	5.8	6.3	7.9	7.3	7.9	8.3	8.7	9.5	10.3	11.1	11.9
1800	5.1	5.5	6.0	6.5	6.9	7.8	8.1	8.8	9.2	10.0	10.5	11.4	12.3	13.2
2000	5.5	6.0	6.6	7.1	7.6	8.6	8.8	9.6	10.	10.6	11.5	12.5	13.5	14.4
2400	6.4	7.0	7.7	8.3	8.9	10.0	10.3	11.2	11.8	12.3	13.5	14.6	15.7	16.8
2800	7.3	8.0	8.7	9.4	10.1	11.4	11.8	12.7	13.4	14.0	15.3	16.6	17.8	19.0
3200	8.2	9.0	9.7	10.5	11.3	12.8	13.1	14.2	14.9	15.7	17.1	18.5	19.8	21.2
3600	9.0	10.0	10.7	11.6	12.4	14.0	14.4	15.6	16.4	17.2	18.8	20.3	21.7	23.1
4000	10.0	10.7	11.7	12.6	13.5	15.3	15.7	17.0	17.9	18.7	20.3	21.9	23.5	25.0
5000	11.6	12.8	13.9	15.0	16.0	18.1	18.6	20.1	21.1	22.0	23.9	25.7	27.3	28.9
6000	13.3	14.6	15.9	17.1	18.3	20.6	21.1	22.8	23.8	24.8	26.8	28.6	30.2	
8000	16.1	17.6	19.1	20.5	21.8	24.3	24.9	26.6	27.6					
10000	18.2	19.7	21.2	22.6	23.9									
12000	19.2													
14000														

Shaded area indicates sprocket and RPM which can be used only if a reduction in belt life is allowable.

FEATURES/BENEFITS PAGE PT11-2
SPECIFICATIONS PAGE PT11-4
ENGINEERING/TECHNICAL PAGE PT11-64

SELECTION

HT100 Basic Horsepower Rating

NOTE: Multiply rating by Belt Length Correction Factor from Ratio/Center Distance Tables

8M-20	HT100 Horsepower Rating–20MM Wide Belt (.79 in.)															
RPM	No. Teeth															
Small Shaft	22	24	26	28	30	32	34	36	38	40	44	48	56	64	72	80
10	0.02	0.03	0.03	0.04	0.04	0.1	0.06	0.06	0.07	0.1	0.1	0.1	0.1	0.1	0.1	0.2
20	0.04	0.1	0.1	0.1	0.1	0.1	0.1	0.1	0.1	0.2	0.2	0.2	0.2	0.2	0.3	0.3
40	0.1	0.1	0.1	0.1	0.2	0.2	0.2	0.3	0.3	0.3	0.3	0.4	0.4	0.5	0.6	0.6
60	0.1	0.2	0.2	0.2	0.3	0.3	0.3	0.4	0.4	0.5	0.5	0.6	0.6	0.7	0.8	0.9
100	0.2	0.3	0.3	0.4	0.4	0.5	0.6	0.6	0.7	0.8	0.8	0.9	1.1	1.2	1.4	1.5
200	0.4	0.5	0.6	0.7	0.8	1.0	1.1	1.3	1.4	1.5	1.7	1.8	2.1	2.3	2.6	2.8
300	0.7	0.7	0.9	1.0	1.2	1.4	1.6	1.8	2.0	2.2	2.4	2.6	3.0	3.4	3.7	4.1
400	0.9	1.0	1.1	1.3	1.6	1.8	2.1	2.3	2.6	2.8	3.1	34	3.8	4.3	4.8	5.3
500	1.1	1.2	1.4	1.6	1.9	2.2	2.5	2.9	3.2	3.5	3.8	4.1	4.7	5.3	5.9	6.4
600	1.3	1.4	1.6	1.9	2.3	2.6	3.0	3.4	3.8	4.1	4.5	4.8	5.5	6.2	6.9	7.6
700	1.5	1.7	1.9	2.2	2.6	3.0	3.4	3.9	4.3	4.7	5.1	5.5	6.3	7.1	7.9	8.6
800	1.8	1.9	2.1	2.5	2.9	3.4	3.8	4.4	4.9	5.9	5.8	6.2	7.1	8.0	8.9	9.7
870	1.9	2.8	2.3	2.7	3.1	3.6	4.1	4.7	5.3	5.7	6.2	6.7	7.7	8.6	9.5	10.4
1000	2.2	2.4	2.6	3.0	3.5	4.1	4.7	5.3	6.0	6.4	7.0	7.6	86	9.7	10.7	11.7
1160	2.5	2.8	3.0	3.5	4.0	4.7	5.3	6.0	6.8	7.3	8.0	8.6	9.8	11.0	12.2	13.3
1200	2.6	2.9	3.1	3.6	4.2	4.8	5.5	6.2	7.0	7.6	8.2	8.9	10.1	11.3	12.5	13.6
1400	3.1	3.3	3.6	4.1	4.8	5.5	6.3	7.1	8.6	8.6	9.4	10.1	11.5	12.9	14.2	15.5
1600	3.5	3.8	4.1	4.6	5.4	6.2	7.1	8.0	9.0	9.7	10.5	11.3	12.9	14.4	15.8	17.2
1750	3.8	4.2	4.5	5.0	5.8	6.7	7.6	8.6	9.7	10.5	11.4	12.2	13.9	15.5	17.0	18.4
2000	4.3	4.7	5.1	5.6	6.5	7.5	8.6	9.7	10.9	11.7	12.7	13.6	15.5	17.2	18.8	20.2
2400	5.2	5.7	6.1	7.0	7.6	8.7	10.0	11.3	12.7	13.6	14.8	15.8	17.8	19.7	21.3	22.8
2800	6.0	6.6	7.1	7.8	8.6	9.9	11.3	12.8	14.4	15.5	16.7	17.8	19.9	21.8	23.4	24.8
3200			8.0	8.8	9.6	11.1	12.6	14.2	16.0	17.2	18.5	19.7	21.8	23.7	25.1	
3500					10.4	11.9	13.5	15.3	17.1	18.4	19.7	20.9	23.1	24.8		
4000						13.1	14.9	16.9	18.9	20.2	21.6	22.8	24.8			
4500							16.2	18.3	20.4	21.9	23.2	24.3				
5000								19.6	21.9	23.3	24.6	25.5				
5500									23.05	24.6	25.6					
PD: MM	56.0	61.1	66.2	71.3	76.4	81.5	86.6	91.7	96.8	101.9	112.0	122.2	142.6	163.0	183.3	203.7
Inches	**2.21**	**2.41**	**2.61**	**2.81**	**3.01**	**3.21**	**3.41**	**3.61**	**3.81**	**4.01**	**4.41**	**4.81**	**5.61**	**6.42**	**7.22**	**8.02**

8M-30	HT100 Horsepower Rating–30MM Wide Belt (1.18 in.)															
RPM Small	No. Teeth															
Sprocket	22	24	26	28	30	32	34	36	38	40	44	48	56	64	72	80
10	0.03	0 04	0.1	0.1	0.1	0.1	0.1	0.1	0.1	0.1	0.1	0.1	0 1	0.2	0.2	0.2
20	0.1	0.1	0.1	0.1	0.1	0.2	0.2	0.2	0.2	0.2	0.3	0.3	0.3	0.4	0.4	0.5
40	0.1	0.12	0.2	0.2	0.3	0.3	0.4	0.4	0.5	0.5	0.5	0.6	0.7	0.8	0.9	1.0
60	0.2	0.2	0.3	0.3	0.4	0.5	0.5	0.6	0.7	0.7	0.8	0.9	1.0	1.2	1.3	1.4
100	0.3	0.4	0.5	0.6	0.7	0.8	0.9	1.0	1.1	1.2	1.3	1.4	1.7	2.0	2.2	2.4
200	0.7	0.8	0.9	1.1	1.3	1.5	1.7	2.0	2.2	2.4	2.6	2.8	3.3	3.7	4.1	4.5
300	1.0	1.1	1.4	1.6	1.9	2.2	2.5	2.9	3.2	3.5	3.8	4.1	4.7	5.3	5.9	6.5
400	1.4	1.5	1.8	2.1	2.5	2.8	3.3	3.7	4.2	4.5	4.9	5.3	6.1	6.8	7.6	8.3
500	1.7	1.9	2.3	2.6	3.0	3.5	4.0	4.5	5.1	5.5	6.0	6.5	7.4	8.3	9.3	10.2
600	2.1	2.3	2.6	3.0	3.5	4.1	4.7	5.3	6.0	6.5	7.0	7.6	8.7	9.8	10.9	11.9
700	2.4	2.6	2.9	3.5	4.1	4.7	5.4	6.1	6.8	7.4	8.1	8.7	10.0	11.2	12.4	13.6
800	2.8	3.0	3.3	3.9	4.6	5.3	6.1	6.9	7.7	8.3	9.1	9.78	11.2	12.6	14.0	15.3
870	3.0	3.3	3.6	4.2	4.9	5.7	6.5	7.4	8.3	9.0	9.8	10.5	12.1	13.6	15.0	16.4
1000	3.4	3.8	4.1	4.8	5.6	6.5	7.4	8.4	9.4	10.2	11.0	11.9	13.6	15.3	16.9	18.5
1160	4.0	4.4	4.7	5.5	6.4	7.4	8.4	9.5	10.7	11.6	12.6	13.6	15.5	17.4	19.2	21.0
1200	4.1	4.5	4.9	5.6	6.6	7.6	8.7	9.8	11.0	11.9	12.9	14.0	16.0	17.9	19.7	21.6
1400	4.8	5.3	5.7	6.4	7.5	8.7	9.9	11.2	12.6	13.6	14.8	16.0	18.2	20.4	22.4	24.4
1600	5.5	6.0	6.5	7.2	8.5	9.8	11.1	12.6	14.2	15.3	16.6	18.0	20.4	22.7	25.0	27.1
1750	6.0	6.5	7.1	7.8	9.1	10.5	12.0	13.6	15.3	16.5	17.9	19.3	21.9	24.4	26.8	29.1
2000	6.9	7.5	8.1	8.9	10.3	11.8	13.5	15.3	17.2	18.5	20.0	21.6	24.4	27.1	29.7	32.0
2400	8.2	8.9	9.6	10.6	12.0	13.8	15.8	17.8	20.0	21.6	23.3	25.0	28.2	31.1	33.8	36.2
2800	9.5	10.4	11.2	12.2	13.6	15.7	17.9	20.2	22.7	24.4	26.3	28.12	31.6	34.6	37.2	39.4
3200			12.7	13.9	15.2	17.5	19.9	22.5	25.2	27.1	29.2	31.1	34.6	37.6	39.9	
3500					16.4	18.8	21.4	24.1	27.0	29.1	31.2	33.1	36.6	39.4		
4000						20.8	23.6	26.7	29.9	32.0	34.2	36.2	39.4			
4500							25.7	29.0	32.4	34.7	36.8	38.7				
5000								31.1	34.7	37.0	39.1	40.7				
5500									36.6	39.1	40.8					
PD: MM	56.0	61.1	66.2	71.3	76.4	81.5	86.6	91.7	96.8	101.9	112.0	122.2	142.6	163.0	183.3	203.7
Inches	**2.21**	**2.41**	**2.61**	**2.81**	**3.01**	**3.21**	**3.41**	**3.61**	**3.81**	**4.01**	**4.41**	**4.81**	**5.61**	**6.42**	**7.22**	**8.02**

Operation in shaded area will result in a reduction of belt life.

FEATURES/BENEFITS PAGE PT11-2	SPECIFICATIONS PAGE PT11-4	ENGINEERING/TECHNICAL PAGE PT11-64	

HT100 Basic Horsepower Rating

NOTE: Multiply rating by Belt Length Correction Factor from Ratio/Center Distance Tables

8M-50 RPM Small Sprocket	HT100 Horsepower Rating–50MM Wide Belt (1.97 in.) No. Teeth												
	28	30	32	34	36	38	40	44	48	56	64	72	80
10	0.1	0.1	0.1	0.16	0.2	0.2	0.2	0.2	0.3	0.3	0.3	0.4	0.4
20	0.2	0.2	0.3	0.3	0.3	0.4	0.4	0.5	0.5	0.6	0.7	0.7	0.8
40	0.4	0.5	0.5	0.6	0.7	0.8	0.8	0.9	1.0	1.2	1.3	1.5	1.7
60	0.6	0.7	0.8	0.9	1.0	1.2	1.2	1.4	1.5	1.7	2.0	2.2	2.5
100	1.0	1.2	1.3	1.5	1.7	2.0	2.1	2.3	2.5	2.9	3.3	3.7	4.1
200	1.9	2.3	2.6	3.0	3.4	3.8	4.1	4.5	4.9	5.6	6.4	7.1	7.8
300	2.8	3.3	3.8	4.4	4.9	5.5	6.0	6.5	7.1	8.1	9.2	10.2	11.2
400	3.6	4.3	4.9	5.6	6.4	7.2	7.8	8.5	9.2	10.5	11.8	13.1	14.4
500	4.5	5.2	6.0	6.9	7.8	8.8	9.5	10.3	11.2	12.8	14.4	16.0	17.6
600	5.3	7.1	7.1	8.1	9.2	10.3	11.2	12.2	13.1	15.1	17.0	18.8	20.6
700	6.0	7.0	8.1	9.3	10.5	11.9	12.8	14.0	15.1	17.3	19.4	21.5	23.6
800	6.8	7.9	9.2	10.5	11.9	13.4	14.4	15.7	17.0	19.4	21.8	24.2	26.5
870	7.3	8.6	10.0	11.3	12.8	14.4	15.5	16.9	18.3	20.9	23.5	26.0	28.5
1000	8.3	9.7	11.2	12.8	14.5	16.3	17.6	19.1	20.6	23.6	26.5	29.3	32.1
1160	9.4	11.0	12.8	14.6	16.5	18.5	20.0	21.8	23.5	26.8	30.1	33.3	36.3
1200	9.7	11.4	13.1	15.0	17.0	19.1	20.6	22.4	24.2	27.6	31.0	34.2	37.4
1400	11.1	13.0	15.0	17.2	19.5	21.9	23.6	25.6	27.6	31.5	35.3	38.9	42.4
1600	12.5	14.6	16.9	19.3	21.9	24.5	26.5	28.8	31.0	35.3	39.4	43.3	47.1
1750	13.5	15.8	18.3	20.9	23.6	26.5	28.6	31.0	33.4	38.0	42.4	46.5	50.4
2000	15.3	17.8	20.5	23.4	26.5	29.7	32.7	34.7	37.4	42.4	47.1	51.5	55.6
2400	18.3	20.7	23.9	27.3	30.9	34.6	37.4	40.4	43.3	48.9	54.0	58.7	62.9
2800	21.2	23.6	27.2	31.0	35.1	39.3	42.4	45.7	48.9	54.8	60.1	64.8	68.7
3200	24.1	26.3	30.3	34.5	39.0	43.8	47.1	50.7	54.0	60.2	65.4	69.7	
3500		28.4	32.5	37.1	41.9	46.9	50.4	54.1	57.6	63.7	68.6		
4000			36.0	41.0	46.3	51.8	55.6	59.4	62.9	68.7			
4500				44.7	50.4	56.3	60.3	64.1	67.4				
5000					54.0	60.3	64.5	68.0	71.0				
5500						63.8	68.0	71.3					
PD: MM	71.3	76.4	81.5	86.6	91.7	96.8	101.9	112	122.2	142.6	163	183.3	203.7
Inches	**2.81**	**3.01**	**3.21**	**3.41**	**3.61**	**3.81**	**4.01**	**4.41**	**4.81**	**5.61**	**6.42**	**7.22**	**8.02**

8M-85 RPM Small Sprocket	HT100 Horsepower Rating–85MM Wide Belt (3.35 in.) No. Teeth									
	34	36	38	40	44	48	56	64	72	80
10	0.3	0.3	0.3	0.4	0.4	04	0.5	0.6	0.7	0.7
20	0.5	0.6	0.7	0.7	0.8	0.9	1.0	1.2	1.3	1.4
40	1.1	1.2	1.4	1.4	1.6	1.7	2.0	2.3	2.6	2.9
60	1.6	1.8	2.1	2.2	2.4	2.6	3.0	3.5	3.9	4.3
100	2.6	3.0	3.4	3.6	4.0	4.3	5.4	5.8	6.5	7.2
200	5.2	5.9	6.7	7.2	7.9	8.5	9.8	11.1	12.3	13.5
300	7.6	8.6	9.6	10.4	11.4	12.3	14.1	15.9	17.7	19.4
400	9.8	11.1	12.5	13.5	14.7	15.9	18.3	20.6	22.9	25.1
500	12.0	13.6	15.3	16.5	18.0	19.4	22.3	25.1	27.9	30.6
600	14.1	16.0	18.0	19.4	21.2	22.9	26.2	29.5	32.7	35.9
700	16.12	18.3	20.6	22.3	24.3	26.2	30.0	33.8	37.5	41.0
800	18.2	20.7	23.2	25.1	27.3	29.5	33.8	38.0	42.1	46.1
870	19.7	22.3	25.0	27.0	29.4	31.8	36.4	40.9	45.3	49.5
1000	22.2	25.2	28.3	30.6	33.3	35.9	41.1	46.1	51.0	55.8
1160	25.3	28.7	32.3	34.8	37.9	40.9	46.7	52.4	57.9	63.2
1200	26.1	29.6	33.2	35.9	39.0	42.1	48.1	53.9	59.5	65.0
1400	29.9	33.8	38.0	41.1	44.6	48.1	54.8	61.4	67.7	73.7
1600	33.6	38.0	42.7	46.1	50.0	53.9	61.4	68.6	75.4	82.0
1750	36.3	41.1	46.1	49.8	54.0	58.1	66.1	73.7	81.0	87.8
2000	40.7	46.1	51.7	55.8	60.5	65.0	73.7	82.0	89.7	96.9
2400	47.5	53.7	60.3	65.0	70.3	75.4	85.1	94.1	102.3	109.7
2800	54.0	61.0	68.5	73.7	79.6	85.1	95.5	104.8	113.0	120.0
3200	60.1	68.0	76.2	82.0	88.2	94.1	104.8	114.1	121.6	
3500	64.6	72.9	81.7	87.8	94.3	100.3	111.1	119.9		
4000	71.5	80.7	90.3	96.9	103.6	109.7	119.9			
4500	77.8	87.8	98.1	105.2	111.8	117.6				
5000		94.2	105.2	112.5	118.8	124.0				
5500			111.3	118.8	124.5					
PD: MM	86.6	91.7	96.8	101.9	112.0	122.2	142.6	163.0	183.3	203.7
Inches	**3.41**	**3.61**	**3.81**	**4.01**	**4.41**	**4.81**	**5.61**	**6.42**	**7.22**	**8.02**

Operation in shaded area will result in a reduction of belt life.

FEATURES/BENEFITS PAGE PT11-2
SPECIFICATIONS PAGE PT11-4
ENGINEERING/TECHNICAL PAGE PT11-64

SELECTION

HT100 Basic Horsepower Rating

NOTE: Multiply rating by Belt Length Correction Factor from Ratio/Center Distance Tables

14M-40	HT100 Horsepower Rating–40MM Wide Belt (1.57 in.)																
	No. Teeth																
RPM Small Sprocket	28	29	30	32	34	36	38	40	44	48	52	56	60	64	68	72	80
10	0.2	0.3	0.3	0.3	0.3	0.4	0.4	0.5	0.6	0.6	0.7	0.7	0.8	0.8	0.9	0.9	1.0
20	0.5	0.5	0.5	0.6	0.6	0.7	0.9	1.0	1.1	1.2	1.3	1 4	1.5	1.6	1.7	1.8	2.1
40	1.0	1.0	1.0	1.2		1.4	1.7	2.0	2.2	2.4	2.6	2.8	3.0	3.2	3.4	3.6	4.2
60	1.5	1.5	1.6	1.7	1.8	2.2	2.5	3.0	3.3	3.6	3.9	4.2	4.5	4.8	5.1	5.4	6.3
100	2.4	2.5	2.6	2.8	3.1	3.6	4.2	5.0	5.5	6.0	6.5	7.0	7.5	8.0	8.5	9.0	10.4
200	4.9	5.0	5.2	5.2	6.1	7.2	8.4	9.8	10.8	12.0	13.0	14.0	15.0	16.0	17.0	18.0	20.9
300	6.7	7.0	7.4	7.3	9.2	10.8	12.2	13.2	14.4	17.1	19.5	21.0	22.5	24.0	25.5	27.0	30.5
400	8.2	8.7	9.2	9.3	11.4	14.4	14.0	16.1	17.5	20.6	25.9	25.8	28.6	29.7	31.3	32.9	36.1
500	9.6	10.2	10.9	11.1	13.5	16.9	17.5	18.8	20.4	23.7	29.4	29.5	32.5	33.7	35.3	37.1	40.7
600	10.9	11.7	12.5	12.9	15.5	19.2	19.8	21.3	23.0	26.4	32.5	32.8	35.8	37.0	38.8	40.8	44.6
700	12.1	13.1	14.0	14.5	17.4	21.2	21.9	23.5	25.3	28.9	35.2	35.6	38.7	39.9	41.8	43.8	47.8
800	13.3	14.2	15.4	16.1	19.1	23.2	23.98	25.6	27.5	31.2	37.6	38.2	41.2	42.4	44.4	46.4	50.5
870	14 1	15.2	16.4	17.2	20.3	24.4	25.3	27.0	29.0	32.7	39.1	39.8	42.7	43.9	45.9	48.0	52.1
1000	15.5	16.8	18.1	19.1	22.2	26.6	27.6	29.4	31.4	35.1	41.5	42.4	45.2	46.3	48.3	50.3	54.3
1160	17.1	18.6	20.0	21.4	24.7	29.1	30.2	32.1	34.2	37.8	44.0	45.0	47.6	48.6	50.4	52.3	56.0
1200	17.5	19.0	20.5	21.9	25.3	29.7	31.0	32.7	34.8	38.4	44.5	45.6	48.1	49.0	50.8	52.7	56.3
1400	19.4	21.1	22.7	24.5	27.9	32.5	33.6	35.6	47.7	41.1	46.8	47.9	50.0	50.5	52.0	53.7	56.4
1600	21.2	23.0	24.8	26.8	30.3	34.6	36.0	38.0	40.0	43.2	48.3	49.4	50.8	51.0	52.0	53.2	54.7
1750	22.5	24.4	26.2	28.5	31.9	36.2	37.6	39.6	41.5	44.4	48.9	49.9	50.9	50.6	51.2	51.9	
2000	24.5	26.5	28.4	30.9	34.3	38.3	39.8	41.8	43.4	45.8	49.2	49.8	49.8	48.6	48.3		
2400	27.8	29.5	31.4	34.2	37.2	40.9	42.3	44.0	45.0	46.2	47.6	46.9					
2800		32.2	33.8	36.6	39.2	42.0	43.3	44.7	44.8	44.4							
*3200				38.0	40.0	42.0	43.0	43.9									
*3500					40.0	41.3	41.9										
PD: MM	124.8	129.2	133.7	142.6	151.5	160.4	169.3	178.3	196.1	213.9	231.7	249.6	267.4	285 2	303.0	320.9	356 5
Inches	**4.91**	**5.09**	**5.26**	**5.61**	**5.97**	**6.32**	**6.67**	**7.02**	**7.72**	**8.42**	**9.12**	**9.82**	**10.53**	**11.23**	**11.93**	**12.63**	**14.04**

14M-55	HT100 Horsepower Rating–55MM Wide Belt (2.17 in.)																
	No. Teeth																
RPM Small Sprocket	28	29	30	32	34	36	38	40	44	48	52	56	60	64	68	72	80
10	0.4	0.4	0.4	0.4	0.4	0.5	0.6	0.7	0.8	0.9	0.9	1.0	1.1	1.2	1.2	1.3	1.5
20	0.7	0.7	0. 8	0.8	0.9	1.0	1.2	1.4	1.6	1.7	1.9	2.0	2.2	2.3	2.5	2.6	3.0
40	1.4	1.5	1.5	1.6	1.8	2.1	2.4	2.9	3.2	3.5	3.8	4.0	4.3	4.6	4.9	5.2	6.0
60	2.1	2.2	2.3	2.4	2.6	3.1	3.6	4.3	4.8	5.2	5.6	6.1	6.5	6.9	7.4	7.8	9.0
100	3.5	3.6	3.8	4.0	4.4	5.2	6.1	7.2	7.9	8.7	9.4	10.1	10.8	11.5	12.3	13.0	15.0
200	7.0	7.3	7.5	7.5	8.8	10.4	12.1	14.1	15.5	17.3	18.7	20.2	21.6	23.0	24.5	25.9	30.0
300	9.6	10.1	10.6	10.5	13.2	15.6	17.5	18.9	20.7	24.6	28.1	30.2	32.4	34.5	36.7	38.8	44.0
400	11.8	12.5	13.3	13.3	16.5	20.7	21.5	23.2	25.2	29.6	37.3	37.2	41.2	42.8	45.0	47.3	51.9
500	13.8	14.7	15.7	16.0	19.5	24.3	25.2	27.1	29.3	34.1	42.4	42.5	46.8	48.5	50.9	53.4	58.6
600	15.7	16.8	18.0	18.5	22.3	27.6	28.5	30.6	33.0	38.0	46.8	47.2	51.5	53.3	55.9	58.6	64.1
700	17.5	18.8	20.1	20.9	25.0	30.5	31.6	33.9	36.5	41.6	50.6	51.3	55.7	57.5	60.2	63.1	68.8
800	19.1	20.7	22.2	23.2	27.5	33.3	34.5	36.9	39.6	44.9	54.1	54.9	59.3	61.0	63.8	66.8	72.7
870	20.2	21.9	23.6	24.8	29.2	35.1	36.4	38.9	41.7	47.0	56.2	57.2	61.5	63.2	66.0	69.0	74.9
1000	22.3	24.1	26.0	27.5	32.2	38.3	39.7	42.3	45.2	50.6	59.7	61.0	65.1	66.7	69.5	72.4	78.2
1160	24.6	26.7	28.8	30.8	35.6	41.8	43.5	46.2	49.2	54.4	63.3	64.8	68.5	69.9	72.5	75.4	80.7
1200	25.2	27.4	29.5	31.5	36.4	42.7	44.3	47.1	50.1	55.3	64.1	65.6	69.2	70.5	73.1	75.9	81.0
1400	27.9	30.3	32.7	35.2	40.2	46.5	48.3	51.2	54.2	59.1	67.3	69.0	71.9	72.7	74.9	77.2	81.2
1600	30.5	33.1	35.7	38.6	43.6	49.9	51.8	54.7	57.6	62.1	69.5	71.0	73.2	73.3	74.9	76.5	78.8
1750	32.3	35.1	37.8	41.0	45.9	52.0	54.1	57.0	59.7	63.9	70.4	71.8	73.2	72.8	73.7	74.6	
2000	35.3	38.1	40.9	44.5	49.3	55.1	57.3	60.2	62.5	65.9	70.8	71.6	71.6	70.0	69.6		
2400	34.0	42.4	45.2	49.2	53.6	58.7	60.8	63.4	64.8	66.5	68.4	67.5					
2800		46.3	48.6	52.6	56.3	60.4	62.4	64.4	64.4	63.9							
*3200				54.7	57.6	60.5	61.9	63.1									
*3500					57.5	59.4	60.3										
PD: MM	124.8	129.2	133.7	142.6	151.5	160.4	169.3	178.3	196.1	213.9	231.7	249.6	267.4	285.2	303.0	320.9	356.5
Inches	**4.91**	**5.09**	**5.26**	**5.61**	**5.97**	**6.32**	**6.67**	**7.02**	**7.72**	**8.42**	**9.12**	**9.82**	**10.53**	**11.23**	**11.93**	**12.63**	**14.04**

Operation in shaded area will result in a reduction of belt life.

* Operation in this speed range may require sound dampening guard.

FEATURES/BENEFITS PAGE PT11-2	SPECIFICATIONS PAGE PT11-4	ENGINEERING/TECHNICAL PAGE PT11-64	

HT100 Basic Horsepower Rating

NOTE: Multiply rating by Belt Length Correction Factor from Ratio/Center Distance Tables

14M-85	HT100 Horsepower Rating–85MM Wide Belt (3.35 in.)																
	No. Teeth																
RPM Small Sprocket	28	29	30	32	34	36	38	40	44	48	52	56	60	64	68	72	80
10	0.6	0.6	0.6	0.7	0.7	0.9	1.0	1.2	1.3	1.4	1.5	1.7	1.8	1.9	2.0	2.1	2.5
20	1.2	1.2	1.2	1.3	1.5	1.7	2.0	2.4	2.6	2.8	3.1	3.3	3.6	3.8	4.0	4.3	5.0
40	2.3	2.4	2.5	2.6	2.9	3.4	4.0	4.7	5.2	5.7	6.2	6.6	7.1	7.6	8.1	8.5	9.9
60	3.5	3.6	3.7	4.0	4.3	5.1	6.0	7.1	7.8	8.5	9.2	10.0	10.7	11.4	12.1	12.8	14.8
100	5.8	6.0	6.2	6.6	7.2	8.5	10.0	11.9	13.0	14.2	15.4	16.6	17.8	19.0	20.1	21.3	24.7
200	11.5	11.9	12.3	12.3	14.5	17.1	19.9	23.2	25.4	28.4	30.8	33.2	35.5	37.9	40.2	42.6	49.4
300	15.8	16.6	17.5	17.3	21.7	25.6	28.8	31.2	34.0	40.4	46.2	49.7	53.2	56.8	60.3	63.8	72.3
400	19.4	20.6	21.8	21.9	27.1	34.1	35.4	38.2	41.5	48.7	61.3	61.1	67.8	70.4	74.0	77.8	85.4
500	22.7	24.2	25.8	26.3	32.1	40.0	41.4	44.5	48.2	56.0	69.7	69.9	76.9	79.7	83.7	87.9	96.3
600	25.8	27.7	29.6	30.4	36.7	45.3	46.9	50.3	54.3	62.6	76.9	77.6	84.8	87.7	91.9	96.5	105.5
700	28.7	30.9	33.1	34.4	41.1	50.2	52.0	55.7	60.0	68.5	83.3	84.3	91.6	94.5	99.0	103.7	113.2
800	31.4	34.0	36.5	38.1	45.3	54.8	56.8	60.7	65.1	73.8	88.9	90.3	97.5	100.4	105.0	109.9	119.5
870	33.3	36.0	38.8	40.7	48.0	57.8	59.9	64.0	68.5	77.3	92.4	94.1	101.2	104.0	108.6	113.6	123.2
1000	36.6	39.7	42.8	45.3	52.9	63.0	65.3	70.0	74.4	83.2	98.2	100.	107.0	109.7	114.2	119.1	128.6
1160	40.5	44.0	47.4	50.6	58.5	68.8	71.5	76.0	80.8	89.5	104.1	107.0	112.7	114.9	119.3	123.9	132.6
1200	41.4	45.0	48.5	51.9	59.9	70.2	72.9	77.5	82.3	90.9	105.4	108.0	113.9	116.0	120.2	124.8	133.2
1400	45.9	49.9	53.8	57.9	66.1	76.5	79.5	84.2	89.1	97.2	110.7	113.	118.2	119.6	123.2	127.0	133.5
1600	50.1	54.4	58.7	63.5	71.7	82.0	85.2	90.0	94.7	102.	114.2	117.0	120.3	120.6	123.2	125.8	129.5
1750	53.2	57.7	62.1	67.4	75.6	85.6	89.0	93.8	98.3	105.1	115.8	118.	120.4	119.7	121.2	122.8	
*2000	58.1	62.6	67.3	73.2	81.2	90.7	94.2	98.9	103.0	108.3	116.5	118.0	117.8	115.1	114.4		
*2400	65.7	69.7	74.3	81.0	88.1	96.5	100.0	104.2	107.0	109.3	112.5	111.0					
*2800		76.1	79.9	86.6	92.7	99.4	103.0	105.9	106.0	105.1							
*3200				90.0	94.7	99.4	101.8	103.9									
*3500					94.6	97.7	99.2										
PD: MM	124.8	129.2	133.7	142.6	151.5	160.4	169.3	178.3	196.1	213.9	231.7	249.6	267.4	285.2	303.0	320.9	356.5
Inches	**4.91**	**5.09**	**5.26**	**5.61**	**5.97**	**6.32**	**6.67**	**7.02**	**7.72**	**8.42**	**9.12**	**9.82**	**10.53**	**11.23**	**11.93**	**12.63**	**14.04**

14M-115	HT100 Horsepower Rating–115MM Wide Belt (4.53 in.)																
	No. Teeth																
RPM Small Sprocket	28	29	30	32	34	36	38	40	44	48	52	56	60	64	68	72	80
10	0.8	0.8	0.9	0.9	1.0	1.2	1.4	1.7	1.8	2.0	2.2	2.4	2.5	2.7	2.9	3.0	3.5
20	1.6	1.7	1.7	1.9	2.0	2.4	2.8	3.4	3.7	4.0	4.4	4.7	5.0	5.4	5.7	6.0	7.0
40	3.3	3.4	3.5	3.7	4.1	4.8	5.6	6.7	7.4	8.0	8.7	9.4	10.1	10.7	11.4	12.1	14.0
60	4.9	5.1	5.2	5.6	6.1	7.2	8.4	10.1	11.1	12.1	13.1	14.1	15.1	16.1	17.1	18.1	21.0
100	8.1	8.4	8.7	9.3	10.2	12.1	14.1	16.7	18.4	20.1	21.8	23.4	25.1	26.8	28.5	30.1	34.9
200	16.3	16.9	17.4	17.4	20.4	24.1	28.1	32.8	35.9	40.2	43.5	46.9	50.2	53.5	56.9	60.2	69.8
300	22.3	23.5	24.7	24.4	30.6	36.2	40.7	44.0	48.0	57.1	65.2	70.2	75.2	80.2	85.1	90.1	102.1
400	27.4	29.1	30.8	31.0	38.3	48.2	50.0	53.9	58.6	68.8	86.7	86.4	95.8	99.5	104.5	110.0	120.6
500	32.1	34.2	36.5	37.1	45.3	56.6	58.5	62.9	68.1	79.2	98.4	98.7	108.6	112.6	118.2	124.2	136.1
600	36.4	39.1	41.8	43.0	51.9	64.0	66.3	71.1	76.8	88.4	108.7	109.6	119.7	123.8	129.8	136.3	149.0
700	40.5	43.6	46.8	48.5	58.1	70.9	73.5	78.7	84.7	96.7	117.6	119.1	129.4	133.5	139.8	146.5	159.9
800	44.4	48.0	51.5	53.9	64.0	77.4	80.2	85.8	92.0	104.3	125.6	127.6	137.7	141.8	148.3	155.2	168.8
870	47.0	50.9	54.7	57.5	67.9	81.6	84.6	90.4	96.8	109.2	130.6	133.0	142.9	146.9	153.4	160.4	174.1
1000	51.7	56.1	60.4	64.0	74.8	89.0	92.3	98.4	105.1	117.5	138.8	141.7	151.2	154.9	161.4	168.3	181.7
1160	57.12	62.1	67.0	71.5	82.7	97.2	101.0	107.3	114.2	126.4	147.1	150.6	159.2	162.4	168.5	175.1	187.4
1200	58.5	63.6	68.6	73.3	84.6	99.1	103.0	109.4	116.3	128.4	148.9	152.5	160.8	163.9	169.8	176.3	188.2
*1400	64.8	70.5	76.1	81.8	93.4	108.1	112.3	119.0	125.8	137.3	156.4	160.2	167.0	168.9	174.0	179.4	188.7
*1600	70.8	76.9	82.9	89.7	101.4	115.8	120.4	127.2	133.8	144.4	161.4	165.1	170.0	170.4	174.0	177.8	183.0
*1750	75.2	81.4	87.7	95.2	106.7	120.9	125.7	132.5	138.8	148.4	163.7	166.9	170.1	169.1	171.3	173.4	
*2000	82.1	88.5	95.0	104.0	114.6	128.1	133.1	139.8	145.2	153.0	164.6	166.4	166.4	162.6	161.6		
*2400	92.9	98.5	105.0	114.4	124.5	136.3	141.3	147.3	150.6	154.4	159.0	150.7					
*2800		107.6	113.0	122.3	130.9	140.4	144.9	149.6	149.7	148.5							
*3200				127.1	133.7	140.5	143.9	146.7									
*3500					133.6	138.0	140.1										
PD: MM	124.8	129.2	133.7	142.6	151.5	160.4	169.3	178.3	196.1	213.9	231.7	249.6	267.4	285.2	303.0	320.9	356.5
Inches	**4.91**	**5.09**	**5.26**	**5.61**	**5.97**	**6.32**	**6.67**	**7.02**	**7.72**	**8.42**	**9.12**	**9.82**	**10.53**	**11.23**	**11.93**	**12.63**	**14.04**

Operation in shaded area will result in a reduction of belt life.

* Operation in this speed range may require sound dampening guard.

FEATURES/BENEFITS PAGE PT11-2 | SPECIFICATIONS PAGE PT11-4 | ENGINEERING/TECHNICAL PAGE PT11-64

SELECTION

HT100 Basic Horsepower Rating

NOTE: Multiply rating by Belt Length Correction Factor from Ratio/Center Distance Tables

14M-170	HT100 Horsepower Rating–170MM Wide Belt (6.69 in.)											
RPM Small Sprocket	No. Teeth											
	36	38	40	44	48	52	56	60	64	68	72	80
10	1.9	2.2	2.6	2.9	3.1	3.4	3.7	3.9	4.2	4.5	4.7	5.5
20	3.8	4.4	5.2	5.8	6.3	6.8	7.3	7.9	8.4	8.9	9.4	11.0
40	7.5	8.8	10.5	11.5	12.6	13.6	14.7	15.7	16.8	17.8	18.9	21.8
60	11.3	13.2	15.7	17.3	18.9	20.4	22.0	23.6	25.1	26.7	28.3	32.8
100	18.9	22.0	26.2	28.8	31.4	34.0	36.6	39.3	41.9	44.5	47.1	54.6
200	37.7	43.9	51.2	56.2	62.8	68.0	73.2	78.5	83.7	88.9	94.1	109.1
300	56.5	63.6	68.8	75.1	89.3	101.9	109.7	117.5	125.3	133.1	140.9	159.6
400	75.3	78.2	84.3	91.6	107.6	135.5	135.0	149.7	155.5	163.4	171.8	188.6
500	88.4	91.4	98.3	106.5	123.7	153.9	154.3	169.8	176.0	184.8	194.1	212.7
600	100.1	103.6	111.2	120.0	138.2	169.9	171.3	187.2	193.6	203.0	213.0	232.9
700	110.9	114.9	123.0	132.4	151.2	183.9	186.2	202.2	208.7	218.5	229.1	249.9
800	120.9	125.3	134.0	143.8	163.1	196.3	199.5	215.3	221.7	231.8	242.6	263.9
870	127.6	132.3	141.3	151.4	170.7	204.1	207.9	223.4	229.7	239.9	250.8	272.1
1000	139.1	144.3	153.8	164.3	183.7	216.9	221.5	236.4	242.2	252.3	263.1	284.0
1160	152.0	157.8	167.8	178.5	197.6	229.9	235.4	248.9	253.9	263.4	273.7	292.9
=1200	155.0	161.0	171.0	181.8	200.8	232.8	238.4	251.4	256.1	265.5	275.6	294.2
=1400	168.9	175.5	186.0	196.7	214.7	244.4	250.4	261.1	264.1	272.0	280.4	294.9
=1600	181.1	188.2	198.8	209.2	225.7	252.3	258.0	265.7	266.4	272.0	277.9	286.1
=1750	189.0	196.5	207.1	217.0	232.1	255.8	260.9	265.9	264.4	267.8	271.1	
=2000	200.3	208.1	218.5	227.0	239.2	257.3	260.2	260.1	254.2	252.7		
=2400	213.1	220.8	230.2	235.4	241.4	248.5	245.0					
=2800	219.5	226.5	233.9	234.0	232.1							
=3200	219.6	224.9	229.4									
=3500	215.8	219.0										
PD: MM	160.4	169.3	178.3	196.1	213.9	231.7	249.6	267.4	285.2	303.0	320.9	356.5
Inches	**6.32**	**6.67**	**7.02**	**7.72**	**8.42**	**9.12**	**9.82**	**10.53**	**11.23**	**11.93**	**12.63**	**14.04**

20M-115	HT100 Horsepower Rating–115MM Wide Belt (4.53 in.)													
RPM Small Sprocket	No. Teeth													
	34	36	38	40	44	48	52	56	60	64	68	72	80	90
*10	2.7	2.9	3.1	3.3	3.6	4.0	4.3	4.6	4.9	5.1	5.4	5.6	6.1	6.7
*20	5.4	5.8	6.1	6.5	7.3	7.9	8.6	9.2	9.8	10.3	10.8	11.3	12.3	13.4
*30	8.1	8.7	9.2	9.8	10.9	11.9	12.9	13.8	14.7	15.4	16.2	16.9	18.4	20.2
*40	10.7	11.5	12.3	13.1	14.5	15.8	17.1	18.5	19.5	20.6	21.6	22.6	24.6	26.9
*50	13.4	14.4	15.3	16.3	18.1	19.8	21.4	23.1	24.4	25.7	27.0	28.2	30.7	33.6
*60	16.1	17.3	18.4	19.6	21.8	23.7	25.7	27.7	29.3	30.8	32.4	33.9	36.8	40.3
*80	21.5	23.1	24.5	26.1	29.0	31.6	34.3	36.9	39.1	41.1	43.1	45.1	49.0	53.7
*100	26.8	28.8	30.7	32.6	36.3	39.6	42.8	46.1	48.8	51.4	53.9	56.4	61.3	67.1
*150	40.3	43.2	46.0	48.9	54.4	59.3	64.2	69.2	73.2	77.0	80.8	84.5	91.8	100.5
*200	53.7	57.6	61.3	65.2	72.4	79.0	85.6	92.1	97.4	102.5	107.5	112.5	122.1	133.6
*300	77.7	83.5	88.7	94.3	105.8	117.7	125.4	132.9	140.3	147.5	154.5	161.4	174.8	190.8
*400	97.9	105.0	111.5	118.5	132.7	147.5	156.8	165.9	174.8	183.4	191.8	200.0	215.8	234.3
*500	116.7	125.0	132.7	140.9	157.6	174.8	185.5	195.9	206.0	215.8	225.2	234.3	251.6	271.5
*600	134.3	143.8	152.5	161.8	180.6	200.0	211.9	223.3	234.3	244.8	254.9	264.5	282.5	302.5
730	155.7	166.5	176.4	186.9	208.2	230.0	242.9	255.2	266.2	277.9	288.2	297.9	315.3	333.2
800	166.6	178.1	188.5	199.5	221.9	244.8	258.2	270.7	282.5	293.5	303.7	313.1	329.4	345.0
870	177.0	189.1	200.0	211.6	235.0	258.8	272.4	285.0	296.6	307.5	317.4	326.2	340.9	353.4
970	191.2	204.0	215.5	227.8	252.4	277.3	272.4	285.0	296.6	307.5	317.4	326.2	340.9	353.4
1170	217.0	231.0	243.4	256.6	282.8	309.0	321.8	332.8	342.0	349.3	354.7	358.0	358.5	
=1200	220.6	234.7	247.3	260.5	286.9	313.1	325.6	336.3	345.0	351.7	356.4	358.9	357.2	
=1460	248.6	263.5	276.4	289.9	316.3	341.8	350.6	356.5	356.2	358.6	354.5			
=1600	261.3	276.3	289.0	302.3	327.8	351.7	357.5	359.3	357.2					
=1750	273.0	287.8	300.0	312.7	336.5	357.9	359.2	355.7						
=2000	288.1	301.8	312.5	323.4	342.3	357.2								
PD: MM	216.45	229.18	241.92	254.65	280.11	305.58	331.04	356.51	381.97	407.44	432.90	458.37	509.30	572.96
Inches	**8.522**	**9.023**	**9.524**	**10.026**	**11.028**	**12.031**	**13.033**	**14.036**	**15.038**	**16.041**	**17.043**	**18.046**	**20.051**	**22.557**

Operation in shaded area will result in a reduction of belt life.

* Refer to page PT11-20 for additional Service Factors for speeds of 600 RPM or less.

= Drives within this speed range may generate an objectionable noise level. This can be reduced by using commercially available acoustical damping material in the belt guard.

FEATURES/BENEFITS PAGE PT11-2	SPECIFICATIONS PAGE PT11-4	ENGINEERING/TECHNICAL PAGE PT11-64	

HT100 Basic Horsepower Rating

NOTE: Multiply rating by Belt Length Correction Factor from Ratio/Center Distance Tables

20M-170 RPM Small Sprocket	HT100 Horsepower Rating–170MM Wide Belt (6.69 in.) No. Teeth													
	34	36	38	40	44	48	52	56	60	64	68	72	80	90
*10	4.2	4.5	4.8	5.1	5.6	6.1	6.7	7.2	7.6	8.0	8.4	8.8	9.5	10.4
*20	8.3	9.0	9.5	10.1	11.3	12.3	13.3	14.3	15.2	16.0	16.8	17.5	19.0	20.9
*30	12.5	13.4	14.3	15.2	16.9	18.4	20.0	21.5	22.8	23.9	25.1	26.3	28.6	31.3
*40	16.7	17.9	19.1	20.3	22.5	24.6	26.6	28.7	30.3	31.9	33.5	35.1	38.1	41.8
*50	20.8	22.4	23.8	25.3	28.2	30.7	33.3	35.8	37.9	39.9	41.9	43.8	47.6	52.2
*60	25.0	26.9	28.6	30.4	33.8	36.9	39.9	43.0	45.5	47.9	50.3	52.6	57.1	62.6
*80	33.4	35.8	38.1	40.5	45.1	49.1	53.2	57.3	60.7	63.8	67.0	70.1	76.1	83.5
*100	41.7	44.8	47.6	50.7	56.3	61.4	66.5	71.7	75.8	79.8	83.7	87.6	95.1	104.3
*150	62.5	67.2	71.4	76.0	84.4	92.1	99.7	107.4	113.6	119.6	125.4	131.2	142.5	156.1
*200	83.3	89.5	95.2	101.2	112.5	122.7	132.9	143.1	151.3	159.2	167.0	174.7	189.6	207.6
*300	120.7	129.6	137.8	146.5	164.4	182.4	194.8	206.5	217.9	229.1	240.0	250.7	271.5	296.5
*400	152.1	163.1	173.2	184.0	206.2	229.1	243.6	257.8	271.5	285.0	298.1	310.8	335.4	364.3
*500	181.2	194.3	206.2	218.8	244.8	271.5	288.3	304.5	320.2	335.4	350.1	364.3	391.4	422.6
*600	208.7	223.4	236.9	251.3	280.7	310.8	329.4	347.2	364.3	380.8	396.6	411.7	439.9	471.4
730	242.0	258.8	274.1	290.5	323.6	357.6	377.8	397.1	415.4	432.7	449.0	464.2	491.8	520.5
800	258.9	276.8	293.0	310.2	345.2	380.8	401.7	421.4	439.9	457.2	473.4	488.3	514.4	539.9
870	275.1	293.9	310.9	329.0	365.5	402.7	424.0	443.9	462.4	479.5	495.1	509.3	533.1	554.1
970	297.3	317.2	335.2	354.3	392.8	431.7	453.2	473.0	490.9	507.1	521.4	533.8	552.8	
1170	337.7	359.5	379.0	399.6	440.7	481.7	502.1	519.9	534.9	547.0	556.3	562.6	565.8	
=1200	343.3	365.4	385.0	405.8	447.1	488.3	508.3	525.6	539.9	551.2	559.4	564.4	564.5	
=1460	387.3	410.7	431.0	452.4	494.2	534.5	549.3	559.6	565.2	565.8	561.3			
=1600	407.5	431.1	451.2	472.3	512.9	551.2	561.5	566.0	564.5					
=1750	426.3	449.7	469.1	489.4	527.6	562.3	566.2	562.8						
=2000	450.8	472.8	490.1	507.8	539.1	564.5								
PD: MM	216.45	229.18	241.92	254.65	280.11	305.58	331.04	356.51	381.97	407.44	432.90	458.37	509.30	572.96
Inches	**8.522**	**9.023**	**9.524**	**10.026**	**11.028**	**12.031**	**13.033**	**14.036**	**15.038**	**16.041**	**17.043**	**18.046**	**20.051**	**22.557**

20M-230 RPM Small Sprocket	HT100 Horsepower Rating–230MM Wide Belt (9.06 in.) No. Teeth											
	38	40	44	48	52	56	60	64	68	72	80	90
*10	6.6	7.0	7.8	8.5	9.2	10.0	10.5	11.1	11.6	12.2	13.2	14.5
*20	13.2	14.1	15.6	17.1	18.5	19.9	21.1	22.2	23.3	24.3	26.4	29.0
*30	19.8	21.1	23.5	25.6	27.7	29.9	31.6	33.3	34.9	36.5	39.7	43.5
*40	26.5	28.1	31.3	34.1	37.0	39.8	42.1	44.3	46.5	48.7	52.9	58.0
*50	33.1	35.2	39.1	42.7	46.2	49.8	52.6	55.4	58.1	60.8	66.1	72.5
*60	39.7	42.2	46.9	51.2	55.4	59.7	63.2	66.5	69.8	73.0	79.3	87.0
*80	52.9	56.3	62.6	68.2	73.9	79.6	84.2	88.6	93.0	97.3	105.7	115.9
*100	66.1	70.3	78.2	85.3	92.4	99.5	105.2	110.8	116.2	121.6	132.1	144.8
*150	99.2	105.5	117.2	127.9	138.5	149.1	157.7	166.0	174.2	182.2	197.9	216.8
*200	132.1	140.6	156.2	170.4	184.5	198.7	210.1	221.1	231.9	242.5	263.3	288.3
*300	191.3	203.4	228.2	253.9	270.5	286.7	302.6	318.1	333.3	348.2	377.1	411.8
*400	240.5	255.5	286.3	318.1	338.3	358.0	377.1	395.8	414.0	431.8	465.9	506.2
*500	286.3	303.9	340.0	377.1	400.4	422.9	444.8	465.9	486.4	506.2	543.9	587.4
*600	329.1	349.1	389.8	431.8	457.4	482.4	506.2	529.1	551.1	572.2	611.6	655.7
730	380.8	403.5	449.6	496.8	525.0	551.9	577.4	601.5	624.3	645.7	684.4	724.9
800	406.9	430.9	479.5	529.1	558.3	585.8	611.6	635.9	658.5	679.4	716.2	752.5
870	432.0	457.1	508.0	559.7	589.4	617.2	643.1	667.1	689.0	709.0	742.8	773.0
=970	465.8	492.4	546.0	600.2	630.3	657.9	683.2	705.9	726.1	743.8	771.1	
=1170	526.9	555.6	612.9	670.2	698.9	724.0	745.3	762.8	776.3	785.7	791.9	
=1200	535.3	564.2	621.9	679.4	707.7	732.1	752.5	768.8	780.9	788.7	790.6	
=1460	599.8	629.7	688.1	744.8	766.1	781.2	789.9	791.9	787.0			
=1600	628.2	657.8	714.8	768.8	784.0	791.4	790.6					
=1750	653.6	682.2	736.0	785.4	791.9	788.7						
=2000	683.8	709.0	753.7	790.6								
PD: MM	241.92	254.65	280.11	305.58	331.04	356.51	381.97	407.44	432.90	458.37	509.30	572.96
Inches	**9.524**	**10.026**	**11.028**	**12.031**	**13.033**	**14.036**	**15.038**	**16.041**	**17.043**	**18.046**	**20.051**	**22.557**

Operation in shaded area will result in a reduction of belt life.

* Refer to page PT11-20 for additional Service Factors for speeds of 600 RPM or less.

= Drives within this speed range may generate an objectionable noise level. This can be reduced by using commercially available acoustical damping material in the belt guard.

FEATURES/BENEFITS PAGE PT11-2 | SPECIFICATIONS PAGE PT11-4 | ENGINEERING/TECHNICAL PAGE PT11-64

SELECTION

HT100 Basic Horsepower Rating

NOTE: Multiply rating by Belt Length Correction Factor from Ratio/Center Distance Tables

20M-290 RPM Small Sprocket	HT100 Horsepower Rating–290MM Wide Belt (11.42 in.) No. Teeth							
	52	56	60	64	68	72	80	90
*10	11.8	12.7	13.5	14.2	14.9	15.6	16.9	18.6
*20	23.7	25.5	27.0	28.4	29.8	31.1	33.8	37.1
*30	35.5	38.2	40.4	42.6	44.7	46.7	50.8	55.7
*40	47.3	50.9	53.9	56.7	59.5	62.3	67.7	74.2
*50	59.1	63.7	67.4	70.9	74.4	77.9	84.6	92.7
*60	71.0	76.4	80.8	85.1	89.3	93.4	101.5	111.1
*80	94.6	101.9	107.8	113.4	119.0	124.5	135.3	148.3
*100	118.2	127.3	134.7	141.8	148.7	155.6	169.0	185.3
*150	177.2	190.8	201.9	212.4	222.9	233.2	253.2	277.4
*200	236.1	254.2	268.9	282.9	296.8	310.4	336.9	368.9
*300	346.2	366.9	387.2	407.1	426.6	445.6	482.7	527.1
*400	433.0	458.2	482.7	506.6	529.9	552.7	596.4	648.1
*500	512.5	541.4	569.4	596.4	622.7	648.1	696.4	752.3
*600	585.7	617.5	648.1	677.5	705.7	732.8	783.4	840.1
730	672.2	706.6	739.3	770.3	799.6	827.1	877.0	929.2
800	714.9	750.1	783.4	814.5	843.6	870.6	918.1	965.1
870	754.8	790.6	823.8	854.6	882.9	908.7	952.4	992.0
=970	807.3	842.9	875.4	904.7	930.9	953.8	989.4	
=1170	895.7	928.1	955.7	978.5	996.3	1008.9	1018.0	
=1200	907.0	938.5	965.1	986.4	1002.4	1012.9	1016.7	
=1460	982.9	1002.9	1014.7	1018.0				
=1600	1006.5	1016.8	1016.7					
=1750	1017.7	1014.6						
=2000								
PD: MM	331.04	356.51	381.97	407.44	432.90	458.37	509.30	572.96
Inches	**13.033**	**14.036**	**15.038**	**16.041**	**17.043**	**18.046**	**20.051**	**22.557**

20M-340 RPM Small Sprocket	HT100 Horsepower Rating–340MM Wide Belt (13.39 in.) No. Teeth							
	52	56	60	64	68	72	80	90
*10	14.0	15.1	15.9	16.8	17.6	18.4	20.0	21.9
*20	28.0	30.1	31.9	33.5	35.2	36.8	40.0	43.9
*30	41.9	45.2	47.8	50.3	52.8	55.2	60.0	65.8
*40	55.9	60.2	63.7	67.1	70.4	73.6	80.0	87.7
*50	69.9	75.3	79.6	83.8	88.0	92.0	100.0	109.6
*60	83.9	90.3	95.6	100.6	105.6	110.4	120.0	131.5
*80	111.8	120.4	127.4	134.1	140.7	147.2	159.9	175.3
*100	139.8	150.5	159.2	167.6	175.8	184.0	199.8	219.0
*150	209.5	225.6	238.7	251.2	263.5	275.6	299.3	328.0
*200	279.2	300.5	317.9	334.5	350.8	366.9	398.3	436.2
*300	409.3	433.8	457.8	481.3	504.3	526.9	570.7	623.1
*400	511.9	541.7	570.7	599.0	626.5	653.4	705.2	766.3
*500	605.9	640.1	673.2	705.2	736.3	766.3	823.5	889.7
*=600	692.5	730.1	766.3	801.1	834.5	866.5	926.5	993.7
=730	794.8	835.6	874.3	911.0	945.7	978.3	1037.4	1099.5
=800	845.3	887.1	926.5	963.4	997.8	1029.8	1086.3	1142.2
=870	892.7	935.0	974.4	1010.9	1044.5	1075.1	1127.2	1174.4
=970	954.8	997.0	1035.6	1070.4	1101.5	1128.7	1171.4	
=1170	1059.7	1098.2	1131.1	1158.3	1179.6	1194.8	1206.4	
=1200	1073.1	1110.6	1142.2	1167.7	1187.0	1199.8	1205.2	
=1460	1163.5	1187.5	1202.0	1206.5	1200.6			
=1600	1192.0	1204.6	1205.2					
=1750	1205.8	1202.8						
=2000								
PD: MM	331.04	356.51	381.97	407.44	432.90	458.37	509.30	572.96
Inches	13.033	14.036	15.038	16.041	17.043	18.046	20.051	22.557

Operation in shaded area will result in a reduction of belt life.

* Refer to page PT11-20 for additional Service Factors for speeds of 600 RPM or less.

= Drives within this speed range may generate an objectionable noise level. This can be reduced by using commercially available acoustical damping material in the belt guard.

FEATURES/BENEFITS PAGE PT11-2	SPECIFICATIONS PAGE PT11-4	ENGINEERING/TECHNICAL PAGE PT11-64	

5MM Pitch HT200 Belt Drive Selection Table

Speed Ratio	Sprocket Combinations Driver No. of Teeth	Driver Pitch Dia. In.	Driven No. of Teeth	Driven Pitch Dia. In.	Center Distance, Inches 300-5M	355-5M	375-5M	400-5M	425-5M	450-5M	550-5M	535-5M	565-5M	600-5M	650-5M	700-5M	750-5M	800-5M	900-5M	1000-5M	1150-5M	1300-5M	1450-5M	1600-5M	1720-5M	2100-5M
Length Factor*					0.77	0.81	0.83	0.84	0.86	0.88	0.90	0.92	0.94	0.95	0.98	1.00	1.01	1.03	1.06	1.09	1.13	1.16	1.19	1.22	1.24	1.29
1.00	32	2.005	32	2.005	2.76	3.84	4.23	4.73	5.22	5.71	6.69	7.38	7.97	8.66	9.65	10.63	11.62	12.60	14.57	16.54	19.49	22.44	25.40	28.35	30.71	38.19
1.00	34	2.130	34	2.130	2.56	3.64	4.03	4.53	5.02	5.51	6.49	7.18	7.77	8.46	9.45	10.43	11.42	12.40	14.37	16.34	19.29	22.24	25.20	28.15	30.51	37.99
1.00	36	2.256	36	2.256	...	3.45	3.84	4.33	4.82	5.32	6.30	6.99	7.58	8.27	9.25	10.24	11.22	12.21	14.17	16.14	19.10	22.05	25.00	27.95	30.32	37.80
1.00	38	2.381	38	2.381	...	3.25	3.64	4.13	4.62	5.12	6.10	6.79	7.38	8.07	9.05	10.04	11.02	12.01	13.97	15.94	18.90	21.85	24.80	27.75	30.12	37.60
1.00	40	2.506	40	2.506	...	3.05	3.44	3.94	4.43	4.92	5.90	6.59	7.18	7.87	8.86	9.84	10.83	11.81	13.78	15.75	18.70	21.65	24.61	27.56	29.92	37.40
1.00	44	2.757	44	2.757	...	...	...	3.54	4.03	4.53	5.51	6.20	6.79	7.48	8.46	9.45	10.43	11.42	13.38	15.35	18.31	21.26	24.21	27.16	29.53	37.01
1.00	48	3.008	48	3.008	...	...	...	...	3.64	4.14	5.12	5.81	6.40	7.09	8.07	9.06	10.04	11.03	12.99	14.96	17.92	20.87	23.82	26.77	29.14	36.62
1.00	52	3.258	52	3.258	...	...	...	...	...	3.74	4.72	5.41	6.00	6.69	7.68	8.66	9.65	10.63	12.60	14.57	17.52	20.47	23.43	26.38	28.74	36.22
1.00	56	3.509	56	3.509	...	...	...	...	...	...	4.33	5.02	5.61	6.30	7.28	8.27	9.25	10.24	12.20	14.17	17.13	20.08	23.03	25.98	28.35	35.83
1.00	60	3.760	60	3.760	...	...	...	...	...	...	...	4.62	5.21	5.90	6.89	7.87	8.86	9.84	11.81	13.78	16.73	19.68	22.64	25.59	27.95	35.43
1.00	64	4.010	64	4.010	...	...	...	...	...	...	...	...	4.82	5.51	6.50	7.48	8.47	9.45	11.42	13.39	16.34	19.29	22.25	25.20	27.56	35.04
1.00	68	4.261	68	4.261	...	...	...	...	...	...	...	...	...	5.12	6.10	7.09	8.07	9.06	11.02	12.99	15.95	18.90	21.85	24.80	27.17	34.65
1.04	50	3.133	52	3.258	...	...	...	...	...	3.84	4.82	5.51	6.10	6.79	7.78	8.76	9.75	10.73	12.70	14.67	17.62	20.57	23.53	26.48	28.84	36.32
1.05	38	2.381	40	2.506	...	3.15	3.54	4.04	4.53	5.02	6.00	6.69	7.28	7.97	8.96	9.94	10.93	11.91	13.88	15.85	18.80	21.75	24.71	27.66	30.02	37.50
1.06	36	2.256	38	2.381	...	3.35	3.74	4.23	4.72	5.22	6.20	6.89	7.48	8.17	9.15	10.14	11.12	12.11	14.07	16.04	19.00	21.95	24.90	27.85	30.22	37.70
1.06	34	2.130	36	2.256	...	3.54	3.93	4.43	4.92	5.41	6.39	7.08	7.67	8.37	9.35	10.34	11.32	12.31	14.27	16.24	19.20	22.15	25.10	28.05	30.42	37.90
1.06	68	4.261	72	4.511	...	...	...	...	...	...	...	...	...	4.92	5.90	6.89	7.87	8.86	10.82	12.79	15.75	18.70	21.66	24.61	26.97	34.45
1.06	32	2.005	34	2.130	2.66	3.74	4.13	4.63	5.12	5.61	6.59	7.28	7.87	8.56	9.55	10.53	11.52	12.50	14.47	16.44	19.39	22.34	25.30	28.25	30.61	38.09
1.06	64	4.010	68	4.261	...	...	...	...	...	...	...	...	4.62	5.31	6.30	7.28	8.27	9.25	11.22	13.19	16.14	19.09	22.05	25.00	27.36	34.84
1.07	60	3.760	64	4.010	...	...	...	...	...	...	...	4.43	5.02	5.71	6.69	7.68	8.66	9.65	11.61	13.58	16.54	19.49	22.44	25.39	27.76	35.24
1.07	56	3.509	60	3.760	...	...	...	...	...	...	4.13	4.82	5.41	6.10	7.08	8.07	9.06	10.04	12.01	13.98	16.93	19.88	22.84	25.79	28.15	35.63
1.08	52	3.258	56	3.509	...	...	...	...	...	...	4.52	5.21	5.80	6.49	7.48	8.46	9.45	10.43	12.40	14.37	17.32	20.27	23.23	26.18	28.54	36.02
1.08	48	3.008	52	3.258	...	...	...	...	...	3.94	4.92	5.61	6.20	6.89	7.87	8.86	9.84	10.83	12.79	14.76	17.72	20.67	23.62	26.57	28.94	36.42
1.09	44	2.757	48	3.008	...	...	...	3.34	3.84	4.33	5.31	6.00	6.59	7.28	8.27	9.25	10.24	11.22	13.19	15.16	18.11	21.06	24.02	26.97	29.33	36.81
1.10	40	2.506	44	2.757	...	...	3.24	3.74	4.23	4.72	5.71	6.40	6.99	7.68	8.66	9.65	10.63	11.62	13.58	15.55	18.51	21.46	24.41	27.36	29.73	37.21
1.11	36	2.256	40	2.506	...	3.25	3.64	4.13	4.62	5.12	6.10	6.79	7.38	8.07	9.05	10.04	11.02	12.01	13.97	15.94	18.90	21.85	24.80	27.75	30.12	37.60
1.12	34	2.130	38	2.381	...	3.44	3.84	4.33	4.82	5.32	6.30	6.99	7.58	8.27	9.25	10.24	11.22	12.21	14.17	16.14	19.10	22.05	25.00	27.95	30.32	37.80
1.13	32	2.005	36	2.256	2.56	3.64	4.03	4.53	5.02	5.51	6.49	7.18	7.77	8.46	9.45	10.43	11.42	12.40	14.37	16.34	19.29	22.24	25.20	28.15	30.51	37.99
1.13	64	4.010	72	4.511	...	...	...	...	...	...	...	...	4.42	5.11	6.10	7.08	8.07	9.05	11.02	12.99	15.95	18.90	21.85	24.80	27.17	34.65
1.13	60	3.760	68	4.261	...	...	...	...	...	...	...	...	4.81	5.50	6.49	7.48	8.46	9.45	11.41	13.38	16.34	19.29	22.24	25.19	27.56	35.04
1.14	56	3.509	64	4.010	...	...	...	...	...	...	...	4.62	5.21	5.90	6.89	7.87	8.86	9.84	11.81	13.78	16.73	19.68	22.64	25.59	27.95	35.43
1.15	52	3.258	60	3.760	...	...	...	...	...	...	4.32	5.01	5.60	6.29	7.28	8.26	9.25	10.23	12.20	14.17	17.13	20.08	23.03	25.98	28.35	35.83
1.16	38	2.381	44	2.757	...	2.95	3.34	3.84	4.33	4.82	5.80	6.49	7.08	7.77	8.76	9.74	10.73	11.71	13.68	15.65	18.60	21.55	24.51	27.46	29.82	37.30
1.17	48	3.008	56	3.509	...	...	...	...	...	3.73	4.71	5.41	6.00	6.69	7.67	8.66	9.64	10.63	12.59	14.56	17.52	20.47	23.43	26.38	28.74	36.22
1.18	34	2.130	40	2.506	...	3.34	3.73	4.23	4.72	5.22	6.20	6.89	7.48	8.17	9.15	10.14	11.12	12.11	14.07	16.04	19.00	21.95	24.90	27.85	30.22	37.70
1.18	68	4.261	80	5.013	...	...	...	...	...	...	...	...	...	...	5.50	6.49	7.47	8.46	10.42	12.40	15.35	18.30	21.26	24.21	26.57	34.05
1.18	44	2.757	52	3.258	...	...	...	...	3.63	4.13	5.11	5.80	6.39	7.08	8.07	9.05	10.04	11.02	12.99	14.96	17.91	20.86	23.82	26.77	29.13	36.61
1.19	32	2.005	38	2.381	...	3.54	3.93	4.43	4.92	5.41	6.39	7.08	7.67	8.36	9.35	10.33	11.32	12.30	14.27	16.24	19.19	22.14	25.10	28.05	30.41	37.89
1.20	40	2.506	48	3.008	...	...	...	3.54	4.03	4.52	5.50	6.19	6.78	7.48	8.46	9.45	10.43	11.42	13.38	15.35	18.31	21.26	24.21	27.16	29.53	37.01
1.20	60	3.760	72	4.511	...	...	...	...	...	...	...	...	4.61	5.30	6.29	7.27	8.26	9.25	11.21	13.18	16.14	19.09	22.05	25.00	27.36	34.84
1.21	56	3.509	68	4.261	...	...	...	...	...	...	...	4.41	5.00	5.70	6.68	7.67	8.65	9.64	11.61	13.58	16.53	19.48	22.44	25.39	27.75	35.24
1.22	36	2.256	44	2.757	...	3.04	3.43	3.93	4.42	4.92	5.90	6.59	7.18	7.87	8.85	9.84	10.82	11.81	13.78	15.75	18.70	21.65	24.61	27.56	29.92	37.40
1.23	52	3.258	64	4.010	...	...	...	...	...	...	4.11	4.81	5.40	6.09	7.08	8.06	9.05	10.03	12.00	13.97	16.93	19.88	22.83	25.78	28.15	35.63
1.25	32	2.005	40	2.506	...	3.44	3.83	4.32	4.82	5.31	6.29	6.98	7.57	8.26	9.25	10.23	11.22	12.20	14.17	16.14	19.10	22.05	25.00	27.95	30.32	37.80
1.25	48	3.008	60	3.760	...	...	...	...	...	...	4.51	5.20	5.79	6.48	7.47	8.46	9.44	10.43	12.39	14.36	17.32	20.27	23.23	26.18	28.54	36.02
1.25	64	4.010	80	5.013	...	...	...	...	...	...	...	...	...	4.70	5.69	6.67	7.66	8.65	10.62	12.59	15.55	18.50	21.45	24.40	26.77	34.25
1.26	38	2.381	48	3.008	...	...	3.13	3.63	4.12	4.62	5.60	6.29	6.88	7.57	8.56	9.54	10.53	11.51	13.48	15.45	18.40	21.36	24.31	27.26	29.63	37.11
1.27	44	2.757	56	3.509	...	...	...	...	...	3.92	4.90	5.60	6.19	6.88	7.86	8.85	9.84	10.82	12.79	14.76	17.71	20.67	23.62	26.57	28.94	36.42
1.29	56	3.509	72	4.511	...	...	...	...	...	...	...	4.20	4.79	5.49	6.48	7.46	8.45	9.44	11.41	13.38	16.33	19.28	22.24	25.19	27.56	35.04
1.29	34	2.130	44	2.757	...	3.14	3.53	4.02	4.52	5.01	5.99	6.68	7.28	7.97	8.95	9.94	10.92	11.91	13.87	15.84	18.80	21.75	24.70	27.65	30.02	37.50
1.30	40	2.506	52	3.258	...	...	...	3.33	3.82	4.32	5.30	5.99	6.58	7.27	8.26	9.25	10.23	11.22	13.18	15.15	18.11	21.06	24.02	26.97	29.33	36.81
1.31	52	3.258	68	4.261	...	...	...	...	...	...	...	4.60	5.19	5.88	6.87	7.86	8.85	9.83	11.80	13.77	16.73	19.68	22.63	25.58	27.95	35.43
1.32	68	4.261	90	5.639	...	...	...	...	...	...	...	...	...	...	...	5.96	6.96	7.94	9.92	11.89	14.85	17.80	20.76	23.71	26.08	33.56
1.33	36	2.256	48	3.008	...	...	3.22	3.72	4.21	4.71	5.69	6.38	6.98	7.67	8.65	9.64	10.62	11.61	13.58	15.55	18.50	21.45	24.41	27.36	29.72	37.20
1.33	48	3.008	64	4.010	...	...	...	...	...	...	4.30	4.99	5.59	6.28	7.27	8.25	9.24	10.23	12.19	14.16	17.12	20.07	23.03	25.98	28.34	35.82
1.33	60	3.760	80	5.013	...	...	...	...	...	...	...	...	...	4.88	5.87	6.86	7.85	8.84	10.81	12.78	15.74	18.69	21.65	24.60	26.96	34.44
1.36	44	2.757	60	3.760	...	...	...	...	...	3.71	4.69	5.39	5.98	6.67	7.66	8.65	9.63	10.62	12.59	14.56	17.51	20.47	23.42	26.37	28.74	36.22
1.37	38	2.381	52	3.258	...	...	...	3.42	3.91	4.41	5.39	6.09	6.68	7.37	8.35	9.34	10.33	11.31	13.28	15.25	18.21	21.16	24.11	27.06	29.43	36.91
1.38	32	2.005	44	2.757	...	3.23	3.62	4.12	4.61	5.11	6.09	6.78	7.37	8.06	9.05	10.03	11.02	12.00	13.97	15.94	18.90	21.85	24.80	27.75	30.12	37.60
Length Factor*					0.77	0.81	0.83	0.84	0.86	0.88	0.90	0.92	0.94	0.95	0.98	1.00	1.01	1.03	1.06	1.09	1.13	1.16	1.19	1.22	1.24	1.29

Center distance is greater than eight times the Small Sprocket and the Large Sprocket is not flanged.
Large Sprocket should be ordered with flanges as a special.

FEATURES/BENEFITS PAGE PT11-2
SPECIFICATIONS PAGE PT11-4
ENGINEERING/TECHNICAL PAGE PT11-64

SELECTION

5MM Pitch HT200 Belt Drive Selection Table

Speed Ratio	Sprocket Combinations: Driver No. of Teeth	Driver Pitch Dia. In.	Driven No. of Teeth	Driven Pitch Dia. In.	Center Distance, Inches: 300-5M	355-5M	375-5M	400-5M	425-5M	450-5M	550-5M	535-5M	565-5M	600-5M	650-5M	700-5M	750-5M	800-5M	900-5M	1000-5M	1150-5M	1300-5M	1450-5M	1600-5M	1720-5M	2100-5M
Length Factor*					**0.77**	**0.81**	**0.83**	**0.84**	**0.86**	**0.88**	**0.90**	**0.92**	**0.94**	**0.95**	**0.98**	**1.00**	**1.01**	**1.03**	**1.06**	**1.09**	**1.13**	**1.16**	**1.19**	**1.22**	**1.24**	**1.29**
1.39	52	3.258	72	4.511	...	...	...	...	...	...	...	4.38	4.98	5.67	6.66	7.65	8.64	9.63	11.60	13.57	16.53	19.48	22.43	25.39	27.75	35.23
1.40	40	2.506	56	3.509	...	...	...	...	3.61	4.11	5.09	5.78	6.38	7.07	8.06	9.04	10.03	11.01	12.98	14.95	17.91	20.86	23.82	26.77	29.13	36.61
1.41	64	4.010	90	5.639	...	...	...	...	...	...	...	...	...	...	5.15	6.15	7.14	8.13	10.10	12.08	15.04	17.99	20.95	23.90	26.27	33.75
1.41	34	2.130	48	3.008	...	2.92	3.32	3.81	4.31	4.80	5.79	6.48	7.07	7.76	8.75	9.73	10.72	11.71	13.67	15.64	18.60	21.55	24.51	27.46	29.82	37.30
1.42	48	3.008	68	4.261	...	...	...	...	...	...	4.08	4.78	5.37	6.07	7.06	8.05	9.03	10.02	11.99	13.96	16.92	19.87	22.83	25.78	28.14	35.63
1.43	56	3.509	80	5.013	...	...	...	...	...	...	...	...	...	5.06	6.06	7.05	8.04	9.03	11.00	12.97	15.93	18.88	21.84	24.79	27.16	34.64
1.44	36	2.256	52	3.258	...	...	...	3.51	4.00	4.50	5.49	6.18	6.77	7.46	8.45	9.44	10.42	11.41	13.37	15.35	18.30	21.25	24.21	27.16	29.53	37.01
1.46	44	2.757	64	4.010	...	...	...	...	...	...	4.48	5.18	5.77	6.46	7.45	8.44	9.43	10.42	12.38	14.36	17.31	20.27	23.22	26.17	28.54	36.02
1.47	38	2.381	56	3.509	...	...	...	...	3.70	4.20	5.18	5.88	6.47	7.16	8.15	9.14	10.12	11.11	13.08	15.05	18.01	20.96	23.91	26.86	29.23	36.71
1.50	32	2.005	48	3.008	...	3.01	3.41	3.91	4.40	4.90	5.88	6.57	7.17	7.86	8.84	9.83	10.82	11.80	13.77	15.74	18.70	21.65	24.60	27.55	29.92	37.40
1.50	40	2.506	60	3.760	...	...	...	...	...	3.89	4.88	5.57	6.17	6.86	7.85	8.84	9.82	10.81	12.78	14.75	17.71	20.66	23.62	26.57	28.93	36.41
1.50	48	3.008	72	4.511	...	...	...	...	...	...	...	4.56	5.16	5.86	6.85	7.84	8.83	9.82	11.79	13.76	16.72	19.67	22.63	25.58	27.94	35.43
1.50	60	3.760	90	5.639	...	...	...	...	...	...	...	...	...	...	5.33	6.33	7.32	8.31	10.29	12.27	15.23	18.18	21.14	24.09	26.46	33.95
1.53	34	2.130	52	3.258	...	...	3.10	3.60	4.09	4.59	5.58	6.27	6.87	7.56	8.54	9.53	10.52	11.50	13.47	15.44	18.40	21.35	24.31	27.26	29.62	37.10
1.54	52	3.258	80	5.013	...	...	...	...	...	...	...	...	4.54	5.24	6.24	7.23	8.22	9.21	11.18	13.16	16.12	19.07	22.03	24.98	27.35	34.83
1.55	44	2.757	68	4.261	...	...	...	...	...	...	4.26	4.96	5.56	6.25	7.24	8.23	9.22	10.21	12.18	14.15	17.11	20.06	23.02	25.97	28.34	35.82
1.56	36	2.256	56	3.509	...	...	...	3.29	3.79	4.29	5.27	5.97	6.56	7.26	8.24	9.23	10.22	11.20	13.17	15.14	18.10	21.05	24.01	26.96	29.33	36.81
1.58	38	2.381	60	3.760	...	...	...	...	3.47	3.98	4.97	5.66	6.26	6.95	7.94	8.93	9.92	10.91	12.87	14.85	17.80	20.76	23.71	26.66	29.03	36.51
1.60	40	2.506	64	4.010	...	...	...	...	...	3.66	4.66	5.36	5.95	6.65	7.64	8.63	9.62	10.61	12.57	14.55	17.51	20.46	23.42	26.37	28.73	36.21
1.61	56	3.509	90	5.639	...	...	...	...	...	...	...	...	...	...	5.51	6.51	7.50	8.50	10.48	12.45	15.42	18.37	21.33	24.29	26.65	34.14
1.63	32	2.005	52	3.258	...	...	3.18	3.69	4.18	4.68	5.67	6.37	6.96	7.65	8.64	9.63	10.61	11.60	13.57	15.54	18.50	21.45	24.40	27.35	29.72	37.20
1.64	44	2.757	72	4.511	...	...	...	...	...	...	4.04	4.74	5.34	6.04	7.03	8.02	9.01	10.00	11.97	13.95	16.91	19.86	22.82	25.77	28.14	35.62
1.65	34	2.130	56	3.509	...	...	...	3.38	3.87	4.38	5.37	6.06	6.66	7.35	8.34	9.33	10.31	11.30	13.27	15.24	18.20	21.15	24.11	27.06	29.42	36.90
1.65	68	4.261	112	7.018	...	...	...	...	...	...	...	...	...	...	...	...	...	6.75	8.75	10.74	13.71	16.67	19.64	22.59	24.96	32.45
1.67	36	2.256	60	3.760	...	...	...	...	3.56	4.07	5.06	5.76	6.35	7.04	8.03	9.02	10.01	11.00	12.97	14.94	17.90	20.85	23.81	26.76	29.13	36.61
1.67	48	3.008	80	5.013	...	...	...	...	...	...	...	...	4.71	5.42	6.42	7.41	8.41	9.40	11.37	13.35	16.31	19.26	22.22	25.18	27.54	35.03
1.68	38	2.381	64	4.010	...	...	...	...	...	3.75	4.75	5.45	6.05	6.74	7.73	8.72	9.71	10.70	12.67	14.64	17.60	20.55	23.51	26.46	28.83	36.31
1.70	40	2.506	68	4.261	...	...	...	...	...	...	4.44	5.14	5.74	6.44	7.43	8.42	9.41	10.40	12.37	14.34	17.30	20.26	23.21	26.17	28.53	36.01
1.73	52	3.258	90	5.639	...	...	...	...	...	...	...	...	...	4.67	5.68	6.69	7.68	8.68	10.66	12.64	15.61	18.56	21.52	24.48	26.85	34.33
1.75	32	2.005	56	3.509	...	...	...	3.46	3.96	4.47	5.46	6.15	6.75	7.44	8.43	9.42	10.41	11.39	13.36	15.34	18.29	21.25	24.20	27.15	29.52	37.00
1.75	64	4.010	112	7.018	...	...	...	...	...	...	...	...	...	...	...	...	5.91	6.92	8.93	10.92	13.90	16.86	19.83	22.78	25.15	32.64
1.77	34	2.130	60	3.760	...	...	...	...	3.65	4.15	5.15	5.85	6.44	7.14	8.13	9.12	10.11	11.09	13.06	15.04	18.00	20.95	23.91	26.86	29.22	36.70
1.78	36	2.256	64	4.010	...	...	...	...	...	3.84	4.84	5.54	6.14	6.83	7.82	8.82	9.80	10.79	12.76	14.74	17.70	20.65	23.61	26.56	28.93	36.41
1.79	38	2.381	68	4.261	...	...	...	...	...	...	4.53	5.23	5.83	6.53	7.52	8.51	9.50	10.49	12.46	14.44	17.40	20.35	23.31	26.26	28.63	36.11
1.80	40	2.506	72	4.511	...	...	...	...	...	...	4.21	4.92	5.52	6.22	7.21	8.21	9.20	10.19	12.16	14.14	17.10	20.05	23.01	25.96	28.33	35.81
1.80	50	3.133	90	5.639	...	...	...	...	...	...	...	...	...	4.75	5.77	6.77	7.77	8.77	10.75	12.73	15.70	18.66	21.62	24.57	26.94	34.43
1.82	44	2.757	80	5.013	...	...	...	...	...	...	...	4.28	4.89	5.59	6.60	7.59	8.59	9.58	11.56	13.54	16.50	19.45	22.41	25.37	27.73	35.22
1.87	60	3.760	112	7.018	...	...	...	...	...	...	...	...	...	...	...	...	6.08	7.10	9.10	11.10	14.08	17.05	20.01	22.97	25.34	32.83
1.88	32	2.005	60	3.760	...	...	...	3.23	3.73	4.24	5.24	5.94	6.53	7.23	8.22	9.21	10.20	11.19	13.16	15.13	18.09	21.04	24.00	26.95	29.32	36.80
1.88	48	3.008	90	5.639	...	...	...	...	...	...	...	...	...	4.84	5.86	6.86	7.86	8.86	10.84	12.83	15.79	18.75	21.71	24.67	27.04	34.52
1.88	34	2.130	64	4.010	...	...	...	...	3.41	3.92	4.93	5.63	6.23	6.92	7.92	8.91	9.90	10.89	12.86	14.83	17.79	20.75	23.70	26.66	29.02	36.51
1.89	36	2.256	68	4.261	...	...	...	...	...	3.60	4.61	5.32	5.92	6.62	7.61	8.60	9.59	10.58	12.56	14.53	17.49	20.45	23.41	26.36	28.72	36.21
1.90	38	2.381	72	4.511	...	...	...	...	...	...	4.29	5.00	5.61	6.31	7.30	8.30	9.29	10.28	12.26	14.23	17.19	20.15	23.11	26.06	28.43	35.91
2.00	32	2.005	64	4.010	...	...	...	...	3.50	4.01	5.02	5.72	6.32	7.01	8.01	9.00	9.99	10.98	12.95	14.93	17.89	20.84	23.80	26.75	29.12	36.60
2.00	34	2.130	68	4.261	...	...	...	...	...	3.69	4.70	5.41	6.01	6.71	7.70	8.70	9.69	10.68	12.65	14.63	17.59	20.54	23.50	26.45	28.82	36.30
2.00	36	2.256	72	4.511	...	...	...	...	...	...	4.38	5.09	5.69	6.40	7.39	8.39	9.38	10.37	12.35	14.33	17.29	20.24	23.20	26.16	28.52	36.01
2.00	40	2.506	80	5.013	...	...	...	...	...	...	...	4.45	5.06	5.77	6.77	7.77	8.77	9.76	11.74	13.72	16.69	19.64	22.60	25.56	27.93	35.41
2.00	56	3.509	112	7.018	...	...	...	...	...	...	...	...	...	...	...	...	6.25	7.27	9.28	11.28	14.26	17.23	20.20	23.16	25.53	33.03
2.05	44	2.757	90	5.639	...	...	...	...	...	...	...	...	...	5.01	6.03	7.04	8.04	9.04	11.03	13.01	15.98	18.94	21.90	24.86	27.23	34.72
2.11	38	2.381	80	5.013	...	...	...	...	...	...	...	4.53	5.14	5.85	6.86	7.86	8.86	9.85	11.83	13.82	16.78	19.74	22.70	25.65	28.02	35.51
2.12	34	2.130	72	4.511	...	...	...	...	...	...	.4.46	5.18	5.78	6.48	7.48	8.48	9.47	10.47	12.44	14.42	17.38	20.34	23.30	26.25	28.62	36.10
2.13	32	2.005	68	4.261	...	...	...	...	...	3.77	4.79	5.49	6.09	6.79	7.79	8.79	9.78	10.77	12.74	14.72	17.68	20.64	23.60	26.55	28.92	36.40
2.15	52	3.258	112	7.018	...	...	...	...	...	...	...	...	...	...	...	5.38	6.42	7.44	9.46	11.46	14.45	17.42	20.39	23.35	25.72	33.22
2.22	36	2.256	80	5.013	...	...	...	...	...	...	3.88	4.61	5.23	5.94	6.95	7.95	8.95	9.95	11.93	13.91	16.87	19.83	22.79	25.75	28.12	35.60
2.25	32	2.005	72	4.511	...	...	...	...	...	3.52	4.55	5.26	5.87	6.57	7.57	8.57	9.57	10.56	12.53	14.51	17.48	20.43	23.39	26.35	28.72	36.20
2.25	40	2.506	90	5.639	...	...	...	...	...	...	...	...	4.44	5.17	6.20	7.21	8.22	9.22	11.21	13.19	16.17	19.13	22.09	25.05	27.42	34.91
2.33	48	3.008	112	7.018	...	...	...	...	...	...	...	...	...	...	...	5.54	6.58	7.61	9.63	11.64	14.63	17.60	20.57	23.54	25.91	33.41
2.35	34	2.130	80	5.013	...	...	...	...	...	...	3.96	4.70	5.31	6.03	7.04	8.04	9.04	10.04	12.02	14.00	16.97	19.93	22.89	25.84	28.21	35.70
2.37	38	2.381	90	5.639	...	...	...	...	...	...	...	...	4.52	5.26	6.28	7.30	8.31	9.31	11.30	13.29	16.26	19.22	22.19	25.14	27.51	35.00
Length Factor*					**0.77**	**0.81**	**0.83**	**0.84**	**0.86**	**0.88**	**0.90**	**0.92**	**0.94**	**0.95**	**0.98**	**1.00**	**1.01**	**1.03**	**1.06**	**1.09**	**1.13**	**1.16**	**1.19**	**1.22**	**1.24**	**1.29**

Center distance is greater than eight times the Small Sprocket and the Large Sprocket is not flanged.
Large Sprocket should be ordered with flanges as a special.

FEATURES/BENEFITS PAGE PT11-2 | SPECIFICATIONS PAGE PT11-4 | ENGINEERING/TECHNICAL PAGE PT11-64

5MM Pitch HT200 Belt Drive Selection Table

Speed Ratio	Sprocket Combinations				Center Distance, Inches																					
	Driver		Driven																							
	No. of Teeth	Pitch Dia. In.	No. of Teeth	Pitch Dia. In.	300-5M	355-5M	375-5M	400-5M	425-5M	450-5M	550-5M	535-5M	565-5M	600-5M	650-5M	700-5M	750-5M	800-5M	900-5M	1000-5M	1150-5M	1300-5M	1450-5M	1600-5M	1720-5M	2100-5M
Length Factor*					**0.77**	**0.81**	**0.83**	**0.84**	**0.86**	**0.88**	**0.90**	**0.92**	**0.94**	**0.95**	**0.98**	**1.00**	**1.01**	**1.03**	**1.06**	**1.09**	**1.13**	**1.16**	**1.19**	**1.22**	**1.24**	**1.29**
2.50	32	2.005	80	5.013	. . .	. . .	. . .	. . .	. . .	. . .	4.05	4.78	5.40	6.11	7.12	8.13	9.13	10.13	12.11	14.09	17.06	20.02	22.98	25.94	28.31	35.80
2.50	36	2.256	90	5.639	. . .	. . .	. . .	. . .	. . .	. . .	. . .	. . .	4.60	5.34	6.37	7.38	8.39	9.40	11.39	13.38	16.35	19.32	22.28	25.24	27.61	35.10
2.55	44	2.757	112	7.018	. . .	. . .	. . .	. . .	. . .	. . .	. . .	. . .	. . .	. . .	. . .	5.70	6.75	7.78	9.81	11.82	14.81	17.78	20.76	23.72	26.10	33.60
2.65	34	2.130	90	5.639	. . .	. . .	. . .	. . .	. . .	. . .	. . .	. . .	4.69	5.42	6.45	7.47	8.48	9.49	11.48	13.47	16.44	19.41	22.37	25.33	27.70	35.19
2.80	40	2.506	112	7.018	. . .	. . .	. . .	. . .	. . .	. . .	. . .	. . .	. . .	. . .	. . .	5.86	6.91	7.95	9.98	11.99	14.99	17.97	20.94	23.91	26.28	33.78
2.81	32	2.005	90	5.639	. . .	. . .	. . .	. . .	. . .	. . .	. . .	4.12	4.77	5.50	6.54	7.56	8.57	9.57	11.57	13.56	16.54	19.50	22.47	25.43	27.80	35.29
2.95	38	2.381	112	7.018	. . .	. . .	. . .	. . .	. . .	. . .	. . .	. . .	. . .	. . .	. . .	5.94	7.00	8.03	10.06	12.08	15.08	18.06	21.04	24.00	26.38	33.88
3.11	36	2.256	112	7.018	. . .	. . .	. . .	. . .	. . .	. . .	. . .	. . .	. . .	. . .	4.92	6.02	7.08	8.11	10.15	12.17	15.17	18.15	21.13	24.09	26.47	33.97
3.29	34	2.130	112	7.018	. . .	. . .	. . .	. . .	. . .	. . .	. . .	. . .	. . .	. . .	5.00	6.10	7.16	8.20	10.24	12.26	15.26	18.24	21.22	24.19	26.56	34.07
3.50	32	2.005	112	7.018	. . .	. . .	. . .	. . .	. . .	. . .	. . .	. . .	. . .	. . .	5.08	6.18	7.24	8.28	10.32	12.34	15.35	18.33	21.31	24.28	26.66	34.16
Length Factor*					**0.77**	**0.81**	**0.83**	**0.84**	**0.86**	**0.88**	**0.90**	**0.92**	**0.94**	**0.95**	**0.98**	**1.00**	**1.01**	**1.03**	**1.06**	**1.09**	**1.13**	**1.16**	**1.19**	**1.22**	**1.24**	**1.29**

Center distance is greater than eight times the Small Sprocket and the Large Sprocket is not flanged.
Large Sprocket should be ordered with flanges as a special.

V-Drives
FHP Drives
Drive Component Accessories
DYNA-SYNC
HT200/HTD Synchronous Drives
HT500 Synchronous Drives
Roller Chain Sprockets

SELECTION

8MM Pitch HT200 Belt Drive Selection Table

Speed Ratio	Sprocket Combinations				Center Distance, Inches															
	Driver		Driven																	
	No. of Teeth	Pitch Dia. Inches	No. of Teeth	Pitch Dia. Inches	384-8M	480-8M	560-8M	600-8M	640-8M	720-8M	800-8M	840-8M	880-8M	920-8M	960-8M	1040-8M	1064-8M	1120-8M	1160-8M	1200-8M
Length Factor*					0.70	0.80	0.80	0.80	0.90	0.90	0.90	0.90	0.90	1.00	1.00	1.00	1.00	1.00	1.00	1.00
1.00	22	2.206	22	2.206	4.09	5.98	7.56	8.34	9.13	10.71	12.28	13.07	13.86	14.64	15.43	17.00	17.48	18.58	19.37	20.15
1.00	24	2.406	24	2.406	3.78	5.67	7.25	8.03	8.82	10.40	11.97	12.76	13.55	14.33	15.12	16.69	17.17	18.27	19.06	19.84
1.00	26	2.607	26	2.607	3.46	5.35	6.93	7.71	8.50	10.08	11.65	12.44	13.23	14.01	14.80	16.37	16.85	17.95	18.74	19.52
1.00	28	2.807	28	2.807	. . .	5.04	6.62	7.40	8.19	9.77	11.34	12.13	12.92	13.70	14.49	16.06	16.54	17.64	18.43	19.21
1.00	30	3.008	30	3.008	. . .	4.73	6.30	7.09	7.88	9.45	11.03	11.81	12.60	13.39	14.18	15.75	16.22	17.32	18.11	18.90
1.00	32	3.208	32	3.208	. . .	4.41	5.99	6.77	7.56	9.14	10.71	11.50	12.29	13.07	13.86	15.43	15.91	17.01	17.80	18.58
1.00	34	3.409	34	3.409	. . .	4.10	5.67	6.46	7.25	8.82	10.40	11.18	11.97	12.76	13.55	15.12	15.59	16.69	17.48	18.27
1.00	36	3.609	36	3.609	. . .	. . .	5.36	6.14	6.93	8.51	10.08	10.87	11.66	12.44	13.23	14.80	15.28	16.38	17.17	17.95
1.00	38	3.810	38	3.810	. . .	. . .	5.04	5.83	6.62	8.19	9.77	10.55	11.34	12.13	12.92	14.49	14.96	16.06	16.85	17.64
1.00	40	4.010	40	4.010	. . .	. . .	4.73	5.51	6.30	7.88	9.45	10.24	11.03	11.81	12.60	14.17	14.65	15.75	16.54	17.32
1.00	44	4.411	44	4.411	. . .	. . .	. . .	. . .	5.67	7.25	8.82	9.61	10.40	11.18	11.97	13.54	14.02	15.12	15.91	16.69
1.00	48	4.812	48	4.812	. . .	. . .	. . .	. . .	. . .	6.62	8.19	8.98	9.77	10.55	11.34	12.91	13.39	14.49	15.28	16.06
1.00	56	5.614	56	5.614	. . .	. . .	. . .	. . .	. . .	. . .	6.93	7.72	8.51	9.29	10.08	11.65	12.13	13.23	14.02	14.80
1.00	64	6.416	64	6.416	. . .	. . .	. . .	. . .	. . .	. . .	. . .	. . .	7.25	8.03	8.82	10.39	10.87	11.97	12.76	13.54
1.00	72	7.218	72	7.218	. . .	. . .	. . .	. . .	. . .	. . .	. . .	. . .	. . .	. . .	. . .	9.13	9.61	10.71	11.50	12.28
1.00	80	8.020	80	8.020	. . .	. . .	. . .	. . .	. . .	. . .	. . .	. . .	. . .	. . .	. . .	. . .	. . .	9.45	10.24	11.02
1.05	38	3.810	40	4.010	. . .	. . .	4.88	5.67	6.46	8.03	9.61	10.39	11.18	11.97	12.76	14.33	14.80	15.90	16.69	17.48
1.06	36	3.609	38	3.810	. . .	. . .	5.20	5.98	6.77	8.35	9.92	10.71	11.50	12.28	13.07	14.64	15.12	16.22	17.01	17.79
1.06	34	3.409	36	3.609	. . .	. . .	5.51	6.30	7.09	8.66	10.24	11.02	11.81	12.60	13.39	14.96	15.43	16.53	17.32	18.11
1.06	32	3.208	34	3.409	. . .	4.25	5.83	6.61	7.40	8.98	10.55	11.34	12.13	12.91	13.70	15.27	15.75	16.85	17.64	18.42
1.07	30	3.008	32	3.208	. . .	4.57	6.14	6.93	7.72	9.29	10.87	11.65	12.44	13.23	14.02	15.59	16.06	17.16	17.95	18.74
1.07	28	2.807	30	3.008	. . .	4.88	6.46	7.24	8.03	9.61	11.18	11.97	12.76	13.54	14.33	15.90	16.38	17.48	18.27	19.05
1.08	26	2.607	28	2.807	3.31	5.20	6.77	7.56	8.35	9.92	11.50	12.28	13.07	13.86	14.65	16.22	16.69	17.79	18.58	19.37
1.08	24	2.406	26	2.607	3.62	5.51	7.09	7.87	8.66	10.24	11.81	12.60	13.39	14.17	14.96	16.53	17.01	18.11	18.90	19.68
1.09	22	2.206	24	2.406	3.94	5.83	7.40	8.19	8.98	10.55	12.13	12.91	13.70	14.49	15.28	16.85	17.32	18.42	19.21	20.00
1.09	44	4.411	48	4.812	. . .	. . .	. . .	. . .	5.35	6.93	8.50	9.29	10.08	10.86	11.65	13.22	13.70	14.80	15.59	16.38
1.10	40	4.010	44	4.411	. . .	. . .	. . .	5.19	5.98	7.56	9.13	9.92	10.71	11.49	12.28	13.85	14.33	15.43	16.22	17.00
1.11	36	3.609	40	4.010	. . .	. . .	5.04	5.82	6.61	8.19	9.76	10.55	11.34	12.12	12.91	14.48	14.96	16.06	16.85	17.63
1.11	72	7.218	80	8.020	. . .	. . .	. . .	. . .	. . .	. . .	. . .	. . .	. . .	. . .	. . .	8.49	8.97	10.07	10.86	11.65
1.12	34	3.409	38	3.810	. . .	. . .	5.35	6.14	6.93	8.50	10.08	10.86	11.65	12.44	13.23	14.80	15.27	16.37	17.16	17.95
1.13	32	3.208	36	3.609	. . .	4.09	5.67	6.45	7.24	8.82	10.39	11.18	11.97	12.75	13.54	15.11	15.59	16.69	17.48	18.26
1.13	64	6.416	72	7.218	. . .	. . .	. . .	. . .	. . .	. . .	. . .	. . .	. . .	7.39	8.18	9.75	10.23	11.33	12.12	12.91
1.13	80	8.020	90	9.023	. . .	. . .	. . .	. . .	. . .	. . .	. . .	. . .	. . .	. . .	. . .	. . .	. . .	. . .	9.44	10.22
1.13	30	3.008	34	3.409	. . .	4.41	5.98	6.77	7.56	9.13	10.71	11.49	12.28	13.07	13.86	15.43	15.90	17.00	17.79	18.58
1.14	28	2.807	32	3.208	. . .	4.72	6.30	7.08	7.87	9.45	11.02	11.81	12.60	13.38	14.17	15.74	16.22	17.32	18.11	18.89
1.14	56	5.614	64	6.416	. . .	. . .	. . .	. . .	. . .	. . .	. . .	7.08	7.87	8.65	9.44	11.01	11.49	12.59	13.38	14.17
1.15	26	2.607	30	3.008	. . .	5.04	6.61	7.40	8.19	9.76	11.34	12.12	12.91	13.70	14.49	16.06	16.53	17.63	18.42	19.21
1.16	38	3.810	44	4.411	. . .	. . .	. . .	5.34	6.14	7.71	9.29	10.07	10.86	11.65	12.44	14.01	14.49	15.59	16.38	17.16
Length Factor*					0.70	0.80	0.80	0.80	0.90	0.90	0.90	0.90	0.90	1.00	1.00	1.00	1.00	1.00	1.00	1.00

Center distance is greater than eight times the Small Sprocket and the Large Sprocket is not flanged. Large Sprocket should be ordered with flanges as a special.

* This length correction factor must be used to determine the proper belt width.

FEATURES/BENEFITS PAGE PT11-2
SPECIFICATIONS PAGE PT11-4
ENGINEERING/TECHNICAL PAGE PT11-64

8MM Pitch HT200 Belt Drive Selection Table

Speed Ratio	Sprocket Combinations Driver No. of Teeth	Driver Pitch Dia. Inches	Driven No. of Teeth	Driven Pitch Dia. Inches	Center Distance, Inches 1224-8M	1280-8M	1440-8M	1512-8M	1584-8M	1600-8M	1760-8M	1800-8M	2000-8M	2200-8M	2400-8M	2600-8M	2800-8M	3048-8M	3280-8M	3600-8M	4400-8M
Length Factor*					1.00	1.10	1.10	1.10	1.10	1.10	1.10	1.20	1.20	1.20	1.20	1.20	1.20	1.20	1.20	1.20	1.20
1.00	22	2.206	22	2.206	20.63	21.73	24.88	26.30	27.71	28.03	31.18	31.97	35.90	39.84	43.78	47.71	51.65	56.53	61.10	67.40	83.15
1.00	24	2.406	24	2.406	20.32	21.42	24.57	25.99	27.40	27.72	30.87	31.66	35.59	39.53	43.47	47.40	51.34	56.22	60.79	67.09	82.84
1.00	26	2.607	26	2.607	20.00	21.10	24.25	25.67	27.08	27.40	30.55	31.34	35.27	39.21	43.15	47.08	51.02	55.90	60.47	66.77	82.52
1.00	28	2.807	28	2.807	19.69	20.79	23.94	25.36	26.77	27.09	30.24	31.03	34.96	38.90	42.84	46.77	50.71	55.59	60.16	66.46	82.21
1.00	30	3.008	30	3.008	19.37	20.47	23.62	25.04	26.46	26.77	29.92	30.71	34.65	38.58	42.52	46.46	50.40	55.28	59.84	66.14	81.89
1.00	32	3.208	32	3.208	19.06	20.16	23.31	24.73	26.14	26.46	29.61	30.40	34.33	38.27	42.21	46.14	50.08	54.96	59.53	65.83	81.58
1.00	34	3.409	34	3.409	18.74	19.84	22.99	24.41	25.83	26.14	29.29	30.08	34.02	37.95	41.89	45.83	49.77	54.65	59.21	65.51	81.26
1.00	36	3.609	36	3.609	18.43	19.53	22.68	24.10	25.51	25.83	28.98	29.77	33.70	37.64	41.58	45.51	49.45	54.33	58.90	65.20	80.95
1.00	38	3.810	38	3.810	18.11	19.21	22.36	23.78	25.20	25.51	28.66	29.45	33.39	37.32	41.26	45.20	49.14	54.02	58.58	64.88	80.63
1.00	40	4.010	40	4.010	17.80	18.90	22.05	23.47	24.88	25.20	28.35	29.14	33.07	37.01	40.95	44.88	48.82	53.70	58.27	64.57	80.32
1.00	44	4.411	44	4.411	17.17	18.27	21.42	22.84	24.25	24.57	27.72	28.51	32.44	36.38	40.32	44.25	48.19	53.07	57.64	63.94	79.69
1.00	48	4.812	48	4.812	16.54	17.64	20.79	22.21	23.62	23.94	27.09	27.88	31.81	35.75	39.69	43.62	47.56	52.44	57.01	63.31	79.06
1.00	56	5.614	56	5.614	15.28	16.38	19.53	20.95	22.36	22.68	25.83	26.62	30.55	34.49	38.43	42.36	46.30	51.18	55.75	62.05	77.80
1.00	64	6.416	64	6.416	14.02	15.12	18.27	19.69	21.10	21.42	24.57	25.36	29.29	33.23	37.17	41.10	45.04	49.92	54.49	60.79	76.54
1.00	72	7.218	72	7.218	12.76	13.86	17.01	18.43	19.84	20.16	23.31	24.10	28.03	31.97	35.91	39.84	43.78	48.66	53.23	59.53	75.28
1.00	80	8.020	80	8.020	11.50	12.60	15.75	17.17	18.58	18.90	22.05	22.84	26.77	30.71	34.65	38.58	42.52	47.40	51.97	58.27	74.02
1.05	38	3.810	40	4.010	17.95	19.05	22.20	23.62	25.04	25.35	28.50	29.29	33.23	37.16	41.10	45.04	48.98	53.86	58.42	64.72	80.47
1.06	36	3.609	38	3.810	18.27	19.37	22.52	23.94	25.35	25.67	28.82	29.61	33.54	37.48	41.42	45.35	49.29	54.17	58.74	65.04	80.79
1.06	34	3.409	36	3.609	18.58	19.68	22.83	24.25	25.67	25.98	29.13	29.92	33.86	37.79	41.73	45.67	49.61	54.49	59.05	65.35	81.10
1.06	32	3.208	34	3.409	18.90	20.00	23.15	24.57	25.98	26.30	29.45	30.24	34.17	38.11	42.05	45.98	49.92	54.80	59.37	65.67	81.42
1.07	30	3.008	32	3.208	19.21	20.31	23.46	24.88	26.30	26.61	29.76	30.55	34.49	38.42	42.36	46.30	50.24	55.12	59.68	65.98	81.73
1.07	28	2.807	30	3.008	19.53	20.63	23.78	25.20	26.61	26.93	30.08	30.87	34.80	38.74	42.68	46.61	50.55	55.43	60.00	66.30	82.05
1.08	26	2.607	28	2.807	19.84	20.94	24.09	25.51	26.93	27.24	30.39	31.18	35.12	39.05	42.99	46.93	50.87	55.75	60.31	66.61	82.36
1.08	24	2.406	26	2.607	20.16	21.26	24.41	25.83	27.24	27.56	30.71	31.50	35.43	39.37	43.31	47.24	51.18	56.06	60.63	66.93	82.68
1.09	22	2.206	24	2.406	20.47	21.57	24.72	26.14	27.56	27.87	31.02	31.81	35.75	39.68	43.62	47.56	51.50	56.38	60.94	67.24	82.99
1.09	44	4.411	48	4.812	16.85	17.95	21.10	22.52	23.94	24.25	27.40	28.19	32.13	36.06	40.00	43.94	47.88	52.76	57.32	63.62	79.37
1.10	40	4.010	44	4.411	17.48	18.58	21.73	23.15	24.57	24.88	28.03	28.82	32.76	36.69	40.63	44.57	48.51	53.39	57.95	64.25	80.00
1.11	36	3.609	40	4.010	18.11	19.21	22.36	23.78	25.20	25.51	28.66	29.45	33.39	37.32	41.26	45.20	49.14	54.02	58.58	64.88	80.63
1.11	72	7.218	80	8.020	12.12	13.22	16.37	17.79	19.21	19.52	22.67	23.46	27.40	31.33	35.27	39.21	43.15	48.03	52.60	58.90	74.65
1.12	34	3.409	38	3.810	18.42	19.52	22.67	24.09	25.51	25.82	28.97	29.76	33.70	37.63	41.57	45.51	49.45	54.33	58.89	65.19	80.94
1.13	32	3.208	36	3.609	18.74	19.84	22.99	24.41	25.83	26.14	29.29	30.08	34.02	37.95	41.89	45.83	49.77	54.65	59.21	65.51	81.26
1.13	64	6.416	72	7.218	13.38	14.48	17.63	19.05	20.47	20.78	23.93	24.72	28.66	32.59	36.53	40.47	44.41	49.29	53.86	60.16	75.91
1.13	80	8.020	90	9.023	10.70	11.80	14.95	16.37	17.79	18.10	21.25	22.04	25.98	29.92	33.86	37.79	41.73	46.61	51.18	57.48	73.23
1.13	30	3.008	34	3.409	19.05	20.15	23.30	24.72	26.14	26.45	29.60	30.39	34.33	38.26	42.20	46.14	50.08	54.96	59.52	65.82	81.57
1.14	28	2.807	32	3.208	19.37	20.47	23.62	25.04	26.46	26.77	29.92	30.71	34.65	38.58	42.52	46.46	50.40	55.28	59.84	66.14	81.89
1.14	56	5.614	64	6.416	14.64	15.74	18.89	20.31	21.73	22.04	25.19	25.98	29.92	33.85	37.79	41.73	45.67	50.55	55.12	61.42	77.17
1.15	26	2.607	30	3.008	19.68	20.78	23.93	25.35	26.77	27.08	30.23	31.02	34.96	38.89	42.83	46.77	50.71	55.59	60.15	66.45	82.20
1.16	38	3.810	44	4.411	17.64	18.74	21.89	23.31	24.72	25.04	28.19	28.98	32.91	36.85	40.79	44.72	48.66	53.54	58.11	64.41	80.16
Length Factor*					1.00	1.10	1.10	1.10	1.10	1.10	1.10	1.20	1.20	1.20	1.20	1.20	1.20	1.20	1.20	1.20	1.20

Center distance is greater than eight times the Small Sprocket and the Large Sprocket is not flanged. Large Sprocket should be ordered with flanges as a special.

* This length correction factor must be used to determine the proper belt width.

FEATURES/BENEFITS PAGE PT11-2
SPECIFICATIONS PAGE PT11-4
ENGINEERING/TECHNICAL PAGE PT11-64

SELECTION

8MM Pitch HT200 Belt Drive Selection Table

Speed Ratio	Sprocket Combinations				Center Distance, Inches															
	Driver		Driven																	
	No. of Teeth	Pitch Dia. Inches	No. of Teeth	Pitch Dia. Inches	384-8M	480-8M	560-8M	600-8M	640-8M	720-8M	800-8M	840-8M	880-8M	920-8M	960-8M	1040-8M	1064-8M	1120-8M	1160-8M	1200-8M
Length Factor*					**0.70**	**0.80**	**0.80**	**0.80**	**0.90**	**0.90**	**0.90**	**0.90**	**0.90**	**1.00**	**1.00**	**1.00**	**1.00**	**1.00**	**1.00**	**1.00**
1.17	24	2.406	28	2.807	3.46	5.35	6.93	7.71	8.50	10.08	11.65	12.44	13.23	14.01	14.80	16.37	16.85	17.95	18.74	19.52
1.17	48	4.812	56	5.614	. . .	. . .	. . .	. . .	. . .	5.97	7.55	8.34	9.13	9.91	10.70	12.27	12.75	13.85	14.64	15.43
1.18	34	3.409	40	4.010	. . .	. . .	5.19	5.98	6.77	8.34	9.92	10.70	11.49	12.28	13.07	14.64	15.12	16.22	17.01	17.79
1.18	22	2.206	26	2.607	3.77	5.67	7.24	8.03	8.82	10.39	11.97	12.75	13.54	14.33	15.12	16.69	17.16	18.26	19.05	19.84
1.19	32	3.208	38	3.810	. . .	. . .	5.50	6.29	7.08	8.66	10.23	11.02	11.81	12.59	13.38	14.96	15.43	16.53	17.32	18.11
1.20	30	3.008	36	3.609	. . .	4.24	5.82	6.61	7.40	8.97	10.55	11.33	12.12	12.91	13.70	15.27	15.75	16.85	17.64	18.42
1.20	40	4.010	48	4.812	. . .	. . .	. . .	. . .	5.66	7.24	8.81	9.60	10.39	11.17	11.96	13.54	14.01	15.11	15.90	16.69
1.21	28	2.807	34	3.409	. . .	4.56	6.14	6.92	7.71	9.29	10.86	11.65	12.44	13.22	14.01	15.59	16.06	17.16	17.95	18.74
1.22	36	3.609	44	4.411	. . .	. . .	4.71	5.50	6.29	7.87	9.44	10.23	11.02	11.80	12.59	14.17	14.64	15.74	16.53	17.32
1.23	26	2.607	32	3.208	. . .	4.87	6.45	7.24	8.03	9.60	11.18	11.96	12.75	13.54	14.33	15.90	16.38	17.48	18.27	19.05
1.25	24	2.406	30	3.008	3.29	5.19	6.77	7.55	8.34	9.92	11.49	12.28	13.07	13.85	14.64	16.22	16.69	17.79	18.58	19.37
1.25	32	3.208	40	4.010	. . .	. . .	5.34	6.13	6.92	8.50	10.07	10.86	11.65	12.43	13.22	14.80	15.27	16.37	17.16	17.95
1.25	64	6.416	80	8.020	. . .	. . .	. . .	. . .	. . .	. . .	. . .	. . .	. . .	. . .	. . .	9.10	9.57	10.68	11.47	12.26
1.25	72	7.218	90	9.023	. . .	. . .	. . .	. . .	. . .	. . .	. . .	. . .	. . .	. . .	. . .	. . .	. . .	9.25	10.04	10.83
1.26	38	3.810	48	4.812	. . .	. . .	. . .	5.01	5.81	7.39	8.96	9.75	10.54	11.33	12.12	13.69	14.16	15.27	16.06	16.84
1.27	30	3.008	38	3.810	. . .	4.08	5.66	6.44	7.23	8.81	10.39	11.17	11.96	12.75	13.54	15.11	15.58	16.69	17.48	18.26
1.27	22	2.206	28	2.807	3.61	5.50	7.08	7.87	8.66	10.23	11.81	12.59	13.38	14.17	14.96	16.53	17.01	18.11	18.90	19.68
1.27	44	4.411	56	5.614	. . .	. . .	. . .	. . .	. . .	6.27	7.85	8.64	9.43	10.22	11.01	12.58	13.06	14.16	14.95	15.73
1.29	28	2.807	36	3.609	. . .	4.39	5.97	6.76	7.55	9.13	10.70	11.49	12.28	13.06	13.86	15.43	15.90	17.00	17.79	18.58
1.29	56	5.614	72	7.218	. . .	. . .	. . .	. . .	. . .	. . .	. . .	. . .	7.20	7.99	8.79	10.36	10.84	11.94	12.73	13.52
1.29	34	3.409	44	4.411	. . .	. . .	4.86	5.65	6.44	8.02	9.60	10.38	11.17	11.96	12.75	14.32	14.79	15.90	16.69	17.47
1.31	26	2.607	34	3.409	. . .	4.71	6.29	7.07	7.86	9.44	11.02	11.80	12.59	13.38	14.17	15.74	16.22	17.32	18.11	18.89
1.33	24	2.406	32	3.208	. . .	5.02	6.60	7.39	8.18	9.76	11.33	12.12	12.91	13.69	14.49	16.06	16.53	17.63	18.42	19.21
1.33	30	3.008	40	4.010	. . .	. . .	5.49	6.28	7.07	8.65	10.23	11.01	11.80	12.59	13.38	14.95	15.42	16.53	17.32	18.10
1.33	36	3.609	48	4.812	. . .	. . .	. . .	5.16	5.96	7.54	9.12	9.90	10.69	11.48	12.27	13.84	14.32	15.42	16.21	17.00
1.33	48	4.812	64	6.416	. . .	. . .	. . .	. . .	. . .	. . .	6.88	7.67	8.47	9.26	10.05	11.62	12.10	13.20	13.99	14.78
1.36	28	2.807	38	3.810	. . .	4.22	5.81	6.59	7.39	8.96	10.54	11.33	12.12	12.90	13.69	15.26	15.74	16.84	17.63	18.42
1.36	22	2.206	30	3.008	3.44	5.34	6.92	7.70	8.50	10.07	11.65	12.43	13.22	14.01	14.80	16.37	16.85	17.95	18.74	19.52
1.38	32	3.208	44	4.411	. . .	. . .	5.00	5.79	6.59	8.17	9.75	10.53	11.33	12.11	12.90	14.47	14.95	16.05	16.84	17.63
1.39	26	2.607	36	3.609	. . .	4.54	6.12	6.91	7.70	9.28	10.86	11.64	12.43	13.22	14.01	15.58	16.06	17.16	17.95	18.73
1.40	40	4.010	56	5.614	. . .	. . .	. . .	. . .	. . .	6.57	8.15	8.94	9.73	10.52	11.31	12.89	13.36	14.46	15.26	16.04
1.40	80	8.020	112	11.229	. . .	. . .	. . .	. . .	. . .	. . .	. . .	. . .	. . .	. . .	. . .	. . .	. . .	. . .	. . .	. . .
1.41	64	6.416	90	9.023	. . .	. . .	. . .	. . .	. . .	. . .	. . .	. . .	. . .	. . .	. . .	8.24	8.72	9.83	10.63	11.42
1.41	34	3.409	48	4.812	. . .	. . .	. . .	5.31	6.10	7.69	9.27	10.05	10.85	11.63	12.42	14.00	14.47	15.57	16.36	17.15
1.42	24	2.406	34	3.409	. . .	4.86	6.44	7.23	8.02	9.59	11.17	11.96	12.75	13.53	14.32	15.89	16.37	17.47	18.26	19.05
1.43	28	2.807	40	4.010	. . .	4.05	5.64	6.43	7.22	8.80	10.38	11.16	11.96	12.74	13.53	15.10	15.58	16.68	17.47	18.26
1.43	56	5.614	80	8.020	. . .	. . .	. . .	. . .	. . .	. . .	. . .	. . .	. . .	. . .	8.10	9.69	10.17	11.27	12.07	12.86
1.46	22	2.206	32	3.208	3.27	5.17	6.75	7.54	8.33	9.91	11.49	12.27	13.06	13.85	14.64	16.21	16.69	17.79	18.58	19.36
Length Factor*					**0.70**	**0.80**	**0.80**	**0.80**	**0.90**	**0.90**	**0.90**	**0.90**	**0.90**	**1.00**	**1.00**	**1.00**	**1.00**	**1.00**	**1.00**	**1.00**

Center distance is greater than eight times the Small Sprocket and the Large Sprocket is not flanged.
Large Sprocket should be ordered with flanges as a special.

* This length correction factor must be used to determine the proper belt width.

8MM Pitch HT200 Belt Drive Selection Table

Speed Ratio	Sprocket Combinations				Center Distance, Inches																
	Driver		Driven																		
	No. of Teeth	Pitch Dia. Inches	No. of Teeth	Pitch Dia. Inches	1224-8M	1280-8M	1440-8M	1512-8M	1584-8M	1600-8M	1760-8M	1800-8M	2000-8M	2200-8M	2400-8M	2600-8M	2800-8M	3048-8M	3280-8M	3600-8M	4400-8M
Length Factor*					1.00	1.10	1.10	1.10	1.10	1.10	1.10	1.20	1.20	1.20	1.20	1.20	1.20	1.20	1.20	1.20	1.20
1.17	24	2.406	28	2.807	20.00	21.10	24.25	25.67	27.08	27.40	30.55	31.34	35.28	39.21	43.15	47.09	51.03	55.91	60.47	66.77	82.52
1.17	48	4.812	56	5.614	15.90	17.00	20.15	21.57	22.99	23.30	26.45	27.24	31.18	35.11	39.05	42.99	46.93	51.81	56.38	62.68	78.43
1.18	34	3.409	40	4.010	18.27	19.37	22.52	23.94	25.35	25.67	28.82	29.61	33.54	37.48	41.42	45.35	49.29	54.17	58.74	65.04	80.79
1.18	22	2.206	26	2.607	20.31	21.41	24.56	25.98	27.40	27.71	30.86	31.65	35.59	39.52	43.46	47.40	51.34	56.22	60.78	67.08	82.83
1.19	32	3.208	38	3.810	18.58	19.68	22.83	24.25	25.67	25.98	29.13	29.92	33.86	37.79	41.73	45.67	49.61	54.49	59.05	65.35	81.10
1.20	30	3.008	36	3.609	18.90	20.00	23.15	24.57	25.98	26.30	29.45	30.24	34.17	38.11	42.05	45.98	49.92	54.80	59.37	65.67	81.42
1.20	40	4.010	48	4.812	17.16	18.26	21.41	22.83	24.25	24.56	27.71	28.50	32.44	36.37	40.31	44.25	48.19	53.07	57.63	63.93	79.69
1.21	28	2.807	34	3.409	19.21	20.31	23.46	24.88	26.30	26.61	29.76	30.55	34.49	38.42	42.36	46.30	x50.24	55.12	59.68	65.98	81.73
1.22	36	3.609	44	4.411	17.79	18.89	22.04	23.46	24.88	25.19	28.34	29.13	33.07	37.00	40.94	44.88	48.82	53.70	58.26	64.56	80.32
1.23	26	2.607	32	3.208	19.53	20.63	23.78	25.20	26.61	26.93	30.08	30.87	34.80	38.74	42.68	46.61	50.55	55.43	60.00	66.30	82.05
1.25	24	2.406	30	3.008	19.84	20.94	24.09	25.51	26.93	27.24	30.39	31.18	35.12	39.05	42.99	46.93	50.87	55.75	60.31	66.61	82.36
1.25	32	3.208	40	4.010	18.42	19.52	22.67	24.09	25.51	25.82	28.97	29.76	33.70	37.63	41.57	45.51	49.45	54.33	58.89	65.19	80.95
1.25	64	6.416	80	8.020	12.73	13.83	16.99	18.41	19.83	20.14	23.29	24.08	28.02	31.96	35.90	39.83	43.77	48.66	53.22	59.52	75.27
1.25	72	7.218	90	9.023	11.30	12.41	15.56	16.99	18.40	18.72	21.87	22.66	26.60	30.54	34.48	38.41	42.35	47.24	51.80	58.10	73.85
1.26	38	3.810	48	4.812	17.32	18.42	21.57	22.99	24.40	24.72	27.87	28.66	32.59	36.53	40.47	44.41	48.35	53.23	57.79	64.09	79.84
1.27	30	3.008	38	3.810	18.74	19.84	22.99	24.41	25.82	26.14	29.29	30.08	34.01	37.95	41.89	45.82	49.76	54.64	59.21	65.51	81.26
1.27	22	2.206	28	2.807	20.16	21.26	24.41	25.83	27.24	27.56	30.71	31.50	35.43	39.37	43.31	47.24	51.18	56.06	60.63	66.93	82.68
1.27	44	4.411	56	5.614	16.21	17.31	20.46	21.88	23.30	23.61	26.76	27.55	31.49	35.43	39.37	43.30	47.24	52.12	56.69	62.99	78.74
1.29	28	2.807	36	3.609	19.05	20.15	23.30	24.72	26.14	26.45	29.60	30.39	34.33	38.26	42.20	46.14	50.08	54.96	59.52	65.82	81.57
1.29	56	5.614	72	7.218	13.99	15.10	18.25	19.67	21.09	21.40	24.55	25.34	29.28	33.22	37.16	41.09	45.03	49.92	54.48	60.78	76.53
1.29	34	3.409	44	4.411	17.95	19.05	22.20	23.62	25.03	25.35	28.50	29.29	33.22	37.16	41.10	45.04	48.98	53.86	58.42	64.72	80.47
1.31	26	2.607	34	3.409	19.37	20.47	23.62	25.04	26.45	26.77	29.92	30.71	34.64	38.58	42.52	46.45	50.39	55.27	59.84	66.14	81.89
1.33	24	2.406	32	3.208	19.68	20.78	23.93	25.35	26.77	27.08	30.23	31.02	34.96	38.89	42.83	46.77	50.71	55.59	60.15	66.45	82.20
1.33	30	3.008	40	4.010	18.58	19.68	22.83	24.25	25.66	25.98	29.13	29.92	33.85	37.79	41.73	45.67	49.61	54.49	59.05	65.35	81.10
1.33	36	3.609	48	4.812	17.47	18.57	21.72	23.14	24.56	24.87	28.02	28.81	32.75	36.69	40.63	44.56	48.50	53.38	57.95	64.25	80.00
1.33	48	4.812	64	6.416	15.26	16.36	19.51	20.93	22.35	22.66	25.81	26.60	30.54	34.48	38.42	42.35	46.29	51.18	55.74	62.04	77.79
1.36	28	2.807	38	3.810	18.89	19.99	23.14	24.56	25.98	26.29	29.44	30.23	34.17	38.10	42.05	45.98	49.92	54.80	59.37	65.67	81.42
1.36	22	2.206	30	3.008	20.00	21.10	24.25	25.67	27.08	27.40	30.55	31.34	35.27	39.21	43.15	47.08	51.02	55.90	60.47	66.77	82.52
1.38	32	3.208	44	4.411	18.10	19.20	22.35	23.77	25.19	25.50	28.65	29.44	33.38	37.32	41.26	45.19	49.13	54.01	58.58	64.88	80.63
1.39	26	2.607	36	3.609	19.21	20.31	23.46	24.88	26.29	26.61	29.76	30.55	34.48	38.42	42.36	46.30	50.24	55.12	59.68	65.98	81.73
1.40	40	4.010	56	5.614	16.52	17.62	20.77	22.19	23.61	23.92	27.07	27.86	31.80	35.74	39.68	43.61	47.55	52.44	57.00	63.30	79.05
1.40	80	8.020	112	11.229	. . .	9.95	13.13	14.56	15.98	16.30	19.46	20.25	24.20	28.14	32.09	36.03	39.97	44.85	49.42	55.72	71.48
1.41	64	6.416	90	9.023	11.90	13.00	16.17	17.59	19.01	19.33	22.48	23.27	27.21	31.15	35.10	39.03	42.97	47.86	52.42	58.72	74.48
1.41	34	3.409	48	4.812	17.62	18.73	21.88	23.30	24.71	25.03	28.18	28.97	32.91	36.84	40.78	44.72	48.66	53.54	58.10	64.40	80.16
1.42	24	2.406	34	3.409	19.52	20.62	23.77	25.19	26.61	26.92	30.07	30.86	34.80	38.73	42.67	46.61	50.55	55.43	60.00	66.30	82.05
1.43	28	2.807	40	4.010	18.73	19.83	22.98	24.40	25.82	26.13	29.28	30.07	34.01	37.95	41.89	45.82	49.76	54.64	59.21	65.51	81.26
1.43	56	5.614	80	8.020	13.33	14.44	17.60	19.02	20.44	20.75	23.91	24.70	28.64	32.57	36.52	40.45	44.40	49.28	53.84	60.14	75.90
1.46	22	2.206	32	3.208	19.84	20.94	24.09	25.51	26.92	27.24	30.39	31.18	35.11	39.05	42.99	46.93	50.87	55.75	60.31	66.61	82.36
Length Factor*					1.00	1.10	1.10	1.10	1.10	1.10	1.10	1.20	1.20	1.20	1.20	1.20	1.20	1.20	1.20	1.20	1.20

Center distance is greater than eight times the Small Sprocket and the Large Sprocket is not flanged.
Large Sprocket should be ordered with flanges as a special.

* This length correction factor must be used to determine the proper belt width.

V-Drives
FHP Drives
Drive Component Accessories
DYNA-SYNC
HT200/HTD Synchronous Drives
HT500 Synchronous Drives
Roller Chain Sprockets

SELECTION

8MM Pitch HT200 Belt Drive Selection Table

Speed Ratio	Sprocket Combinations: Driver No. of Teeth	Driver Pitch Dia. Inches	Driven No. of Teeth	Driven Pitch Dia. Inches	Center Distance, Inches: 480-8M	560-8M	600-8M	640-8M	720-8M	800-8M	840-8M	880-8M	920-8M	960-8M	1040-8M	1064-8M	1120-8M	1160-8M	1200-8M
Length Factor*					**0.80**	**0.80**	**0.80**	**0.90**	**0.90**	**0.90**	**0.90**	**0.90**	**1.00**	**1.00**	**1.00**	**1.00**	**1.00**	**1.00**	**1.00**
1.46	44	4.411	64	6.416	. . .	. . .	. . .	. . .	. . .	7.18	7.97	8.76	9.55	10.35	11.92	12.40	13.50	14.30	15.08
1.46	26	2.607	38	3.810	4.37	5.95	6.74	7.54	9.12	10.69	11.48	12.27	13.06	13.85	15.42	15.89	16.99	17.78	18.57
1.47	30	3.008	44	4.411	. . .	5.15	5.94	6.74	8.32	9.90	10.69	11.48	12.26	13.05	14.63	15.10	16.20	16.99	17.78
1.47	38	3.810	56	5.614	. . .	. . .	. . .	. . .	6.71	8.30	9.09	9.88	10.67	11.46	13.04	13.51	14.62	15.41	16.19
1.50	24	2.406	36	3.609	4.69	6.27	7.06	7.85	9.43	11.01	11.80	12.59	13.37	14.16	15.73	16.21	17.31	18.10	18.89
1.50	32	3.208	48	4.812	. . .	4.66	5.45	6.25	7.84	9.42	10.20	11.00	11.78	12.58	14.15	14.62	15.73	16.52	17.30
1.50	48	4.812	72	7.218	. . .	. . .	. . .	. . .	. . .	. . .	6.98	7.78	8.58	9.37	10.96	11.43	12.54	13.33	14.12
1.54	26	2.607	40	4.010	4.19	5.79	6.58	7.37	8.95	10.53	11.32	12.11	12.89	13.69	15.26	15.73	16.83	17.62	18.41
1.55	22	2.206	34	3.409	5.00	6.59	7.38	8.17	9.75	11.32	12.11	12.90	13.69	14.48	16.05	16.52	17.62	18.42	19.20
1.56	36	3.609	56	5.614	. . .	. . .	. . .	5.26	6.86	8.45	9.24	10.03	10.82	11.61	13.19	13.66	14.77	15.56	16.35
1.56	72	7.218	112	11.229	. . .	. . .	. . .	. . .	. . .	. . .	. . .	. . .	. . .	. . .	. . .	. . .	. . .	. . .	. . .
1.57	28	2.807	44	4.411	. . .	5.30	6.09	6.88	8.47	10.05	10.84	11.63	12.42	13.21	14.78	15.25	16.36	17.15	17.93
1.58	24	2.406	38	3.810	4.51	6.10	6.89	7.69	9.27	10.85	11.63	12.42	13.21	14.00	15.57	16.05	17.15	17.94	18.72
1.60	30	3.008	48	4.812	. . .	4.80	5.60	6.39	7.98	9.57	10.35	11.15	11.93	12.73	14.30	14.78	15.88	16.67	17.45
1.60	40	4.010	64	6.416	. . .	. . .	. . .	. . .	5.86	7.46	8.26	9.06	9.85	10.64	12.22	12.70	13.80	14.60	15.38
1.61	56	5.614	90	9.023	. . .	. . .	. . .	. . .	. . .	. . .	. . .	. . .	. . .	. . .	8.81	9.29	10.41	11.21	12.00
1.64	22	2.206	36	3.609	4.83	6.42	7.21	8.00	9.58	11.16	11.95	12.74	13.52	14.32	15.89	16.36	17.46	18.25	19.04
1.64	44	4.411	72	7.218	. . .	. . .	. . .	. . .	. . .	6.46	7.27	8.07	8.87	9.66	11.25	11.73	12.83	13.63	14.42
1.65	34	3.409	56	5.614	. . .	. . .	. . .	5.40	7.00	8.59	9.38	10.18	10.97	11.76	13.34	13.81	14.92	15.71	16.50
1.67	24	2.406	40	4.010	4.34	5.93	6.72	7.52	9.10	10.68	11.47	12.26	13.05	13.84	15.41	15.89	16.99	17.78	18.56
1.67	48	4.812	80	8.020	. . .	. . .	. . .	. . .	. . .	. . .	. . .	7.06	7.87	8.67	10.27	10.75	11.86	12.65	13.45
1.68	38	3.810	64	6.416	. . .	. . .	. . .	. . .	6.00	7.61	8.40	9.20	9.99	10.79	12.37	12.85	13.95	14.75	15.53
1.69	26	2.607	44	4.411	. . .	5.44	6.23	7.03	8.62	10.20	10.99	11.78	12.57	13.36	14.93	15.41	16.51	17.30	18.09
1.71	28	2.807	48	4.812	. . .	4.94	5.74	6.54	8.13	9.71	10.50	11.30	12.08	12.88	14.45	14.93	16.03	16.82	17.61
1.73	22	2.206	38	3.810	4.66	6.25	7.04	7.83	9.42	11.00	11.78	12.57	13.36	14.15	15.72	16.20	17.30	18.09	18.88
1.75	32	3.208	56	5.614	. . .	. . .	. . .	5.54	7.14	8.74	9.53	10.33	11.12	11.91	13.49	13.96	15.07	15.86	16.65
1.75	64	6.416	112	11.229	. . .	. . .	. . .	. . .	. . .	. . .	. . .	. . .	. . .	. . .	. . .	. . .	. . .	. . .	9.45
1.78	36	3.609	64	6.416	. . .	. . .	. . .	. . .	6.14	7.75	8.55	9.35	10.14	10.94	12.52	13.00	14.10	14.90	15.68
1.80	40	4.010	72	7.218	. . .	. . .	. . .	. . .	. . .	6.74	7.55	8.35	9.15	9.95	11.54	12.02	13.13	13.92	14.71
1.80	80	8.020	144	14.437	. . .	. . .	. . .	. . .	. . .	. . .	. . .	. . .	. . .	. . .	. . .	. . .	. . .	. . .	. . .
1.82	22	2.206	40	4.010	4.48	6.08	6.87	7.66	9.25	10.83	11.62	12.41	13.20	13.99	15.56	16.04	17.14	17.93	18.72
1.82	44	4.411	80	8.020	. . .	. . .	. . .	. . .	. . .	. . .	. . .	7.34	8.15	8.95	10.55	11.03	12.15	12.95	13.74
1.83	24	2.406	44	4.411	3.97	5.58	6.38	7.18	8.76	10.35	11.14	11.93	12.72	13.51	15.08	15.56	16.66	17.45	18.24
1.85	26	2.607	48	4.812	. . .	5.08	5.88	6.68	8.27	9.86	10.65	11.44	12.23	13.03	14.60	15.08	16.18	16.97	17.76
1.87	30	3.008	56	5.614	. . .	. . .	4.86	5.68	7.29	8.88	9.68	10.47	11.26	12.06	13.64	14.11	15.22	16.01	16.80
1.88	48	4.812	90	9.023	. . .	. . .	. . .	. . .	. . .	. . .	. . .	. . .	. . .	7.75	9.37	9.85	10.98	11.78	12.58
1.88	34	3.409	64	6.416	. . .	. . .	. . .	. . .	6.28	7.89	8.69	9.49	10.28	11.08	12.66	13.14	14.25	15.04	15.83
1.90	38	3.810	72	7.218	. . .	. . .	. . .	. . .	. . .	6.88	7.68	8.49	9.29	10.09	11.68	12.16	13.27	14.07	14.86
Length Factor*					**0.80**	**0.80**	**0.80**	**0.90**	**0.90**	**0.90**	**0.90**	**0.90**	**1.00**	**1.00**	**1.00**	**1.00**	**1.00**	**1.00**	**1.00**

Center distance is greater than eight times the Small Sprocket and the Large Sprocket is not flanged.
Large Sprocket should be ordered with flanges as a special.

* This length correction factor must be used to determine the proper belt width.

8MM Pitch HT200 Belt Drive Selection Table

Speed Ratio	Sprocket Combinations				Center Distance, Inches																
	Driver		Driven																		
	No. of Teeth	Pitch Dia. Inches	No. of Teeth	Pitch Dia. Inches	1224-8M	1280-8M	1440-8M	1512-8M	1584-8M	1600-8M	1760-8M	1800-8M	2000-8M	2200-8M	2400-8M	2600-8M	2800-8M	3048-8M	3280-8M	3600-8M	4400-8M
Length Factor*					**1.00**	**1.10**	**1.10**	**1.10**	**1.10**	**1.10**	**1.10**	**1.20**	**1.20**	**1.20**	**1.20**	**1.20**	**1.20**	**1.20**	**1.20**	**1.20**	**1.20**
1.46	44	4.411	64	6.416	15.56	16.66	19.82	21.24	22.65	22.97	26.12	26.91	30.85	34.79	38.73	42.66	46.61	51.49	56.05	62.35	78.11
1.46	26	2.607	38	3.810	19.05	20.15	23.30	24.72	26.13	26.45	29.60	30.39	34.32	38.26	42.20	46.14	50.08	54.96	59.52	65.82	81.57
1.47	30	3.008	44	4.411	18.25	19.36	22.51	23.93	25.34	25.66	28.81	29.60	33.54	37.47	41.41	45.35	49.29	54.17	58.73	65.03	80.79
1.47	38	3.810	56	5.614	16.67	17.77	20.92	22.35	23.76	24.08	27.23	28.02	31.96	35.89	39.83	43.77	47.71	52.59	57.16	63.46	79.21
1.50	24	2.406	36	3.609	19.36	20.46	23.61	25.03	26.45	26.76	29.91	30.70	34.64	38.58	42.52	46.45	50.39	55.27	59.84	66.14	81.89
1.50	32	3.208	48	4.812	17.78	18.88	22.03	23.45	24.87	25.18	28.33	29.13	33.06	37.00	40.94	44.87	48.81	53.70	58.26	64.56	80.31
1.50	48	4.812	72	7.218	14.60	15.70	18.86	20.28	21.70	22.01	25.17	25.96	29.90	33.84	37.78	41.71	45.66	50.54	55.10	61.40	77.16
1.54	26	2.607	40	4.010	18.88	19.99	23.14	24.56	25.97	26.29	29.44	30.23	34.17	38.10	42.04	45.98	49.92	54.80	59.36	65.66	81.41
1.55	22	2.206	34	3.409	19.68	20.78	23.93	25.35	26.76	27.08	30.23	31.02	34.95	38.89	42.83	46.77	50.71	55.59	60.15	66.45	82.20
1.56	36	3.609	56	5.614	16.82	17.92	21.08	22.50	23.92	24.23	27.38	28.17	32.11	36.05	39.99	43.92	47.87	52.75	57.31	63.61	79.36
1.56	72	7.218	112	11.229	. . .	10.51	13.71	15.14	16.57	16.89	20.06	20.85	24.80	28.75	32.70	36.64	40.58	45.47	50.04	56.34	72.10
1.57	28	2.807	44	4.411	18.41	19.51	22.66	24.08	25.50	25.81	28.96	29.76	33.69	37.63	41.57	45.50	49.44	54.33	58.89	65.19	80.94
1.58	24	2.406	38	3.810	19.20	20.30	23.45	24.87	26.29	26.60	29.75	30.54	34.48	38.42	42.36	46.29	50.23	55.11	59.68	65.98	81.73
1.60	30	3.008	48	4.812	17.93	19.03	22.18	23.61	25.02	25.34	28.49	29.28	33.22	37.15	41.09	45.03	48.97	53.85	58.42	64.72	80.47
1.60	40	4.010	64	6.416	15.86	16.96	20.12	21.54	22.96	23.28	26.43	27.22	31.16	35.10	39.04	42.97	46.92	51.80	56.36	62.66	78.42
1.61	56	5.614	90	9.023	12.48	13.59	16.76	18.19	19.61	19.93	23.09	23.88	27.82	31.76	35.71	39.65	43.59	48.47	53.04	59.34	75.10
1.64	22	2.206	36	3.609	19.52	20.62	23.77	25.19	26.60	26.92	30.07	30.86	34.80	38.73	42.67	46.61	50.55	55.43	59.99	66.29	82.04
1.64	44	4.411	72	7.218	14.90	16.00	19.16	20.58	22.00	22.32	25.47	26.26	30.20	34.14	38.09	42.02	45.97	50.85	55.41	61.72	77.47
1.65	34	3.409	56	5.614	16.97	18.07	21.23	22.65	24.07	24.38	27.54	28.33	32.26	36.20	40.14	44.08	48.02	52.90	57.47	63.77	79.52
1.67	24	2.406	40	4.010	19.04	20.14	23.29	24.71	26.13	26.44	29.60	30.39	34.32	38.26	42.20	46.13	50.07	54.96	59.52	65.82	81.57
1.67	48	4.812	80	8.020	13.92	15.03	18.20	19.62	21.04	21.36	24.51	25.31	29.25	33.19	37.13	41.07	45.01	49.90	54.46	60.77	76.52
1.68	38	3.810	64	6.416	16.01	17.11	20.27	21.69	23.11	23.43	26.58	27.37	31.31	35.25	39.19	43.13	47.07	51.95	56.52	62.82	78.57
1.69	26	2.607	44	4.411	18.56	19.66	22.82	24.24	25.65	25.97	29.12	29.91	33.85	37.78	41.72	45.66	49.60	54.48	59.05	65.35	81.10
1.71	28	2.807	48	4.812	18.08	19.18	22.34	23.76	25.18	25.49	28.64	29.43	33.37	37.31	41.25	45.18	49.13	54.01	58.57	64.87	80.62
1.73	22	2.206	38	3.810	19.35	20.45	23.61	25.03	26.44	26.76	29.91	30.70	34.64	38.57	42.51	46.45	50.39	55.27	59.83	66.14	81.89
1.75	32	3.208	56	5.614	17.12	18.23	21.38	22.80	24.22	24.54	27.69	28.48	32.42	36.36	40.30	44.23	48.18	53.06	57.62	63.92	79.68
1.75	64	6.416	112	11.229	9.94	11.07	14.28	15.72	17.15	17.47	20.65	21.44	25.40	29.35	33.30	37.24	41.19	46.08	50.65	56.96	72.72
1.78	36	3.609	64	6.416	16.16	17.26	20.42	21.85	23.26	23.58	26.73	27.53	31.47	35.40	39.35	43.28	47.23	52.11	56.67	62.98	78.73
1.80	40	4.010	72	7.218	15.19	16.30	19.46	20.88	22.30	22.62	25.78	26.57	30.51	34.45	38.39	42.33	46.27	51.16	55.72	62.03	77.78
1.80	80	8.020	144	14.437	. . .	. . .	. . .	11.68	13.15	13.47	16.70	17.50	21.49	25.46	29.43	33.39	37.34	42.24	46.82	53.13	68.90
1.82	22	2.206	40	4.010	19.19	20.29	23.45	24.87	26.28	26.60	29.75	30.54	34.48	38.41	42.35	46.29	50.23	55.11	59.68	65.98	81.73
1.82	44	4.411	80	8.020	14.22	15.33	18.49	19.92	21.34	21.66	24.82	25.61	29.55	33.49	37.44	41.38	45.32	50.20	54.77	61.08	76.83
1.83	24	2.406	44	4.411	18.71	19.82	22.97	24.39	25.81	26.12	29.27	30.06	34.00	37.94	41.88	45.81	49.76	54.64	59.20	65.50	81.25
1.85	26	2.607	48	4.812	18.23	19.34	22.49	23.91	25.33	25.64	28.80	29.59	33.53	37.46	41.40	45.34	49.28	54.16	58.73	65.03	80.78
1.87	30	3.008	56	5.614	17.27	18.38	21.53	22.96	24.37	24.69	27.84	28.63	32.57	36.51	40.45	44.39	48.33	53.21	57.78	64.08	79.83
1.88	48	4.812	90	9.023	13.06	14.17	17.35	18.78	20.20	20.52	23.69	24.48	28.43	32.37	36.32	40.26	44.20	49.09	53.66	59.96	75.72
1.88	34	3.409	64	6.416	16.31	17.41	20.57	22.00	23.42	23.73	26.89	27.68	31.62	35.56	39.50	43.44	47.38	52.26	56.83	63.13	78.88
1.90	38	3.810	72	7.218	15.34	16.45	19.61	21.03	22.45	22.77	25.93	26.72	30.66	34.60	38.55	42.48	46.43	51.31	55.88	62.18	77.94
Length Factor*					**1.00**	**1.10**	**1.10**	**1.10**	**1.10**	**1.10**	**1.10**	**1.20**	**1.20**	**1.20**	**1.20**	**1.20**	**1.20**	**1.20**	**1.20**	**1.20**	**1.20**

Center distance is greater than eight times the Small Sprocket and the Large Sprocket is not flanged.
Large Sprocket should be ordered with flanges as a special.

* This length correction factor must be used to determine the proper belt width.

V-Drives
FHP Drives
Drive Component Accessories
DYNA-SYNC
HT200/HTD Synchronous Drives
HT500 Synchronous Drives
Roller Chain Sprockets

SELECTION

8MM Pitch HT200 Belt Drive Selection Table

Speed Ratio	Sprocket Combinations				Center Distance, Inches													
	Driver		Driven															
	No. of Teeth	Pitch Dia. Inches	No. of Teeth	Pitch Dia. Inches	560-8M	600-8M	640-8M	720-8M	800-8M	840-8M	880-8M	920-8M	960-8M	1040-8M	1064-8M	1120-8M	1160-8M	1200-8M
Length Factor*					**0.80**	**0.80**	**0.90**	**0.90**	**0.90**	**0.90**	**0.90**	**1.00**	**1.00**	**1.00**	**1.00**	**1.00**	**1.00**	**1.00**
2.00	22	2.206	44	4.411	5.72	6.52	7.32	8.91	10.50	11.28	12.08	12.87	13.66	15.23	15.71	16.81	17.60	18.39
2.00	24	2.406	48	4.812	5.22	6.02	6.82	8.42	10.01	10.80	11.59	12.38	13.18	14.75	15.23	16.33	17.12	17.91
2.00	28	2.807	56	5.614	. . .	5.00	5.82	7.43	9.03	9.82	10.62	11.41	12.21	13.78	14.26	15.37	16.16	16.95
2.00	32	3.208	64	6.416	. . .	. . .	. . .	6.41	8.03	8.83	9.63	10.43	11.23	12.81	13.29	14.40	15.19	15.98
2.00	36	3.609	72	7.218	. . .	. . .	. . .	. . .	7.01	7.82	8.63	9.43	10.24	11.83	12.31	13.42	14.22	15.01
2.00	40	4.010	80	8.020	. . .	. . .	. . .	. . .	. . .	6.79	7.61	8.42	9.23	10.84	11.32	12.43	13.23	14.03
2.00	56	5.614	112	11.229	. . .	. . .	. . .	. . .	. . .	. . .	. . .	. . .	. . .	. . .	. . .	. . .	9.17	9.99
2.00	72	7.218	144	14.437	. . .	. . .	. . .	. . .	. . .	. . .	. . .	. . .	. . .	. . .	. . .	. . .	. . .	. . .
2.05	44	4.411	90	9.023	. . .	. . .	. . .	. . .	. . .	. . .	. . .	7.19	8.01	9.64	10.13	11.26	12.06	12.86
2.11	38	3.810	80	8.020	. . .	. . .	. . .	. . .	. . .	6.92	7.75	8.56	9.37	10.98	11.46	12.58	13.38	14.17
2.12	34	3.409	72	7.218	. . .	. . .	. . .	. . .	7.15	7.96	8.77	9.57	10.38	11.97	12.45	13.56	14.36	15.15
2.13	30	3.008	64	6.416	. . .	. . .	. . .	6.55	8.17	8.97	9.77	10.57	11.37	12.96	13.44	14.54	15.34	16.13
2.15	26	2.607	56	5.614	. . .	5.13	5.95	7.57	9.17	9.96	10.76	11.56	12.35	13.93	14.41	15.52	16.31	17.10
2.18	22	2.206	48	4.812	5.35	6.16	6.97	8.56	10.15	10.95	11.74	12.53	13.32	14.90	15.38	16.48	17.27	18.06
2.22	36	3.609	80	8.020	. . .	. . .	. . .	. . .	. . .	7.05	7.88	8.70	9.51	11.12	11.60	12.72	13.52	14.32
2.25	32	3.208	72	7.218	. . .	. . .	. . .	. . .	7.28	8.10	8.91	9.71	10.52	12.12	12.60	13.71	14.51	15.30
2.25	40	4.010	90	9.023	. . .	. . .	. . .	. . .	. . .	. . .	. . .	7.45	8.28	9.92	10.41	11.54	12.34	13.14
2.25	64	6.416	144	14.437	. . .	. . .	. . .	. . .	. . .	. . .	. . .	. . .	. . .	. . .	. . .	. . .	. . .	. . .
2.29	28	2.807	64	6.416	. . .	. . .	. . .	6.69	8.31	9.11	9.92	10.71	11.51	13.10	13.58	14.69	15.49	16.28
2.33	24	2.406	56	5.614	. . . . .	5.26	6.09	7.71	9.31	10.11	10.91	11.70	12.50	14.08	14.56	15.66	16.46	17.25
2.33	48	4.812	112	11.229	. . .	. . .	. . .	. . .	. . .	. . .	. . .	. . .	. . .	. . .	. . .	8.86	9.70	10.53
2.35	34	3.409	80	8.020	. . .	. . .	. . .	. . .	6.35	7.19	8.01	8.83	9.65	11.26	11.74	12.86	13.66	14.46
2.37	38	3.810	90	9.023	. . .	. . .	. . .	. . .	. . .	. . .	6.74	7.58	8.41	10.05	10.54	11.67	12.48	13.28
2.40	30	3.008	72	7.218	. . .	. . .	. . .	5.75	7.42	8.23	9.05	9.85	10.66	12.26	12.74	13.85	14.65	15.44
240	80	8.020	192	19.249	. . .	. . .	. . .	. . .	. . .	. . .	. . .	. . .	. . .	. . .	. . .	. . .	. . .	. . .
2.46	26	2.607	64	6.416	. . .	. . .	5.16	6.82	8.45	9.25	10.06	10.86	11.66	13.25	13.73	14.84	15.63	16.42
2.50	32	3.208	80	8.020	. . .	. . .	. . .	. . .	6.48	7.32	8.15	8.97	9.78	11.40	11.88	13.00	13.81	14.60
2.50	36	3.609	90	9.023	. . .	. . .	. . .	. . .	. . .	. . .	6.86	7.71	8.55	10.19	10.68	11.81	12.62	13.43
2.55	22	2.206	56	5.614	4.56	5.40	6.22	7.85	9.45	10.25	11.05	11.85	12.64	14.23	14.70	15.81	16.61	17.39
2.55	44	4.411	112	11.229	. . .	. . .	. . .	. . .	. . .	. . .	. . .	. . .	. . .	. . .	. . .	9.12	9.96	10.79
2.57	28	2.807	72	7.218	. . .	. . .	. . .	5.88	7.55	8.37	9.19	9.99	10.80	12.40	12.88	14.00	14.80	15.59
2.57	56	5.614	144	14.437	. . .	. . .	. . .	. . .	. . .	. . .	. . .	. . .	. . .	. . .	. . .	. . .	. . .	. . .
2.65	34	3.409	90	9.023	. . .	. . .	. . .	. . .	. . .	. . .	6.99	7.84	8.68	10.32	10.81	11.95	12.76	13.56
2.67	24	2.406	64	6.416	. . .	. . .	5.29	6.96	8.59	9.39	10.20	11.00	11.80	13.39	13.87	14.98	15.78	16.57
2.67	30	3.008	80	8.020	. . .	. . .	. . .	. . .	6.61	7.45	8.28	9.10	9.92	11.54	12.02	13.14	13.95	14.75
2.67	72	7.218	192	19.249	. . .	. . .	. . .	. . .	. . .	. . .	. . .	. . .	. . .	. . .	. . .	. . .	. . .	. . .
2.77	26	2.607	72	7.218	. . .	. . .	. . .	6.01	7.68	8.50	9.32	10.13	10.94	12.54	13.02	14.14	14.94	15.73
2.80	40	4.010	112	11.229	. . .	. . .	. . .	. . .	. . .	. . .	. . .	. . .	. . .	. . .	8.16	9.37	10.22	11.06
2.81	32	3.208	90	9.023	. . .	. . .	. . .	. . .	. . .	. . .	7.12	7.97	8.81	10.46	10.95	12.09	12.90	13.70
2.86	28	2.807	80	8.020	. . .	. . .	. . .	. . .	6.74	7.58	8.41	9.24	10.06	11.67	12.16	13.28	14.09	14.89
Length Factor*					**0.80**	**0.80**	**0.90**	**0.90**	**0.90**	**0.90**	**0.90**	**1.00**	**1.00**	**1.00**	**1.00**	**1.00**	**1.00**	**1.00**

Center distance is greater than eight times the Small Sprocket and the Large Sprocket is not flanged. Large Sprocket should be ordered with flanges as a special.

* This length correction factor must be used to determine the proper belt width.

8MM Pitch HT200 Belt Drive Selection Table

Speed Ratio	Sprocket Combinations Driver No. of Teeth	Driver Pitch Dia. Inches	Driven No. of Teeth	Driven Pitch Dia. Inches	Center Distance, Inches 1224-8M	1280-8M	1440-8M	1512-8M	1584-8M	1600-8M	1760-8M	1800-8M	2000-8M	2200-8M	2400-8M	2600-8M	2800-8M	3048-8M	3280-8M	3600-8M	4400-8M
Length Factor*					1.00	1.10	1.10	1.10	1.10	1.10	1.10	1.20	1.20	1.20	1.20	1.20	1.20	1.20	1.20	1.20	1.20
2.00	22	2.206	44	4.411	18.87	19.97	23.12	24.54	25.96	26.27	29.43	30.22	34.16	38.09	42.03	45.97	49.91	54.79	59.36	65.66	81.41
2.00	24	2.406	48	4.812	18.39	19.49	22.64	24.07	25.48	25.80	28.95	29.74	33.68	37.62	41.56	45.50	49.44	54.32	58.88	65.18	80.94
2.00	28	2.807	56	5.614	17.42	18.53	21.69	23.11	24.53	24.84	28.00	28.79	32.73	36.66	40.61	44.54	48.49	53.37	57.93	64.24	79.99
2.00	32	3.208	64	6.416	16.46	17.56	20.72	22.15	23.57	23.88	27.04	27.83	31.77	35.71	39.65	43.59	47.53	52.42	56.98	63.29	79.04
2.00	36	3.609	72	7.218	15.49	16.59	19.76	21.18	22.60	22.92	26.08	26.87	30.81	34.75	38.70	42.64	46.58	51.46	56.03	62.34	78.09
2.00	40	4.010	80	8.020	14.51	15.62	18.79	20.22	21.64	21.96	25.12	25.91	29.85	33.80	37.74	41.68	45.63	50.51	55.08	61.38	77.14
2.00	56	5.614	112	11.229	10.49	11.63	14.85	16.29	17.73	18.05	21.23	22.03	25.99	29.94	33.90	37.85	41.80	46.69	51.26	57.57	73.33
2.00	72	7.218	144	14.437	. . .	. . .	. . .	12.22	13.69	14.02	17.26	18.07	22.07	26.05	30.02	33.98	37.94	42.84	47.42	53.74	69.51
2.05	44	4.411	90	9.023	13.34	14.46	17.64	19.07	20.50	20.82	23.98	24.78	28.73	32.67	36.62	40.56	44.51	49.40	53.96	60.27	76.03
2.11	38	3.810	80	8.020	14.65	15.76	18.94	20.36	21.79	22.10	25.27	26.06	30.00	33.95	37.90	41.84	45.78	50.67	55.23	61.54	77.30
2.12	34	3.409	72	7.218	15.63	16.74	19.91	21.33	22.75	23.07	26.23	27.02	30.97	34.91	38.85	42.79	46.73	51.62	56.19	62.49	78.25
2.13	30	3.008	64	6.416	16.61	17.71	20.87	22.30	23.72	24.03	27.19	27.98	31.92	35.86	39.81	43.75	47.69	52.57	57.14	63.44	79.20
2.15	26	2.607	56	5.614	17.57	18.68	21.84	23.26	24.68	24.99	28.15	28.94	32.88	36.82	40.76	44.70	48.64	53.52	58.09	64.39	80.14
2.18	22	2.206	48	4.812	18.54	19.64	22.80	24.22	25.63	25.95	29.10	29.89	33.83	37.77	41.71	45.65	49.59	54.47	59.04	65.34	81.09
2.22	36	3.609	80	8.020	14.80	15.91	19.08	20.51	21.94	22.25	25.42	26.21	30.16	34.10	38.05	41.99	45.93	50.82	55.39	61.69	77.45
2.25	32	3.208	72	7.218	15.78	16.89	20.06	21.48	22.90	23.22	26.38	27.17	31.12	35.06	39.00	42.94	46.89	51.77	56.34	62.64	78.40
2.25	40	4.010	90	9.023	13.63	14.75	17.93	19.37	20.79	21.11	24.28	25.07	29.03	32.97	36.92	40.87	44.81	49.70	54.27	60.58	76.34
2.25	64	6.416	144	14.437	. . .	. . .	11.24	12.75	14.23	14.56	17.81	18.62	22.64	26.62	30.60	34.57	38.53	43.44	48.02	54.34	70.12
2.29	28	2.807	64	6.416	16.75	17.86	21.02	22.45	23.87	24.18	27.34	28.13	32.08	36.02	39.96	43.90	47.84	52.73	57.29	63.60	79.35
2.33	24	2.406	56	5.614	17.72	18.83	21.99	23.41	24.83	25.14	28.30	29.09	33.03	36.97	40.91	44.85	48.79	53.68	58.24	64.55	80.30
2.33	48	4.812	112	11.229	11.03	12.17	15.41	16.86	18.30	18.62	21.81	22.61	26.58	30.54	34.50	38.45	42.40	47.29	51.87	58.18	73.95
2.35	34	3.409	80	8.020	14.94	16.05	19.23	20.66	22.08	22.40	25.56	26.36	30.31	34.25	38.20	42.14	46.09	50.97	55.54	61.85	77.60
2.37	38	3.810	90	9.023	13.77	14.89	18.08	19.51	20.94	21.26	24.43	25.22	29.17	33.12	37.07	41.02	44.97	49.85	54.42	60.73	76.49
2.40	30	3.008	72	7.218	15.92	17.03	20.20	21.63	23.05	23.37	26.53	27.32	31.27	35.21	39.16	43.10	47.04	51.93	56.49	62.80	78.56
240	80	8.020	192	19.249	. . .	. . .	. . .	. . .	. . .	. . .	. . .	. . .	17.04	21.16	25.21	29.24	33.24	38.18	42.79	49.14	64.97
2.46	26	2.607	64	6.416	16.90	18.01	21.17	22.60	24.02	24.33	27.49	28.28	32.23	36.17	40.11	44.05	48.00	52.88	57.45	63.75	79.51
2.50	32	3.208	80	8.020	15.08	16.20	19.38	20.81	22.23	22.55	25.71	26.51	30.46	34.40	38.35	42.29	46.24	51.12	55.69	62.00	77.76
2.50	36	3.609	90	9.023	13.91	15.03	18.22	19.66	21.08	21.40	24.57	25.37	29.32	33.27	37.23	41.17	45.12	50.01	54.58	60.88	76.65
2.55	22	2.206	56	5.614	17.87	18.98	22.14	23.56	24.98	25.30	28.45	29.24	33.18	37.12	41.07	45.01	48.95	53.83	58.40	64.70	80.46
2.55	44	4.411	112	11.229	11.29	12.44	15.69	17.14	18.58	18.90	22.10	22.90	26.87	30.83	34.79	38.75	42.70	47.59	52.17	58.48	74.25
2.57	28	2.807	72	7.218	16.07	17.18	20.35	21.78	23.20	23.52	26.68	27.47	31.42	35.36	39.31	43.25	47.19	52.08	56.65	62.95	78.71
2.57	56	5.614	144	14.437	. . .	. . .	11.76	13.28	14.77	15.10	18.36	19.18	23.20	27.20	31.18	35.15	39.12	44.03	48.62	54.94	70.73
2.65	34	3.409	90	9.023	14.05	15.17	18.37	19.80	21.23	21.55	24.72	25.52	29.47	33.42	37.38	41.32	45.27	50.16	54.73	61.04	76.80
2.67	24	2.406	64	6.416	17.05	18.16	21.32	22.75	24.17	24.48	27.64	28.44	32.38	36.32	40.27	44.21	48.15	53.03	57.60	63.90	79.66
2.67	30	3.008	80	8.020	15.23	16.34	19.52	20.95	22.38	22.70	25.86	26.66	30.61	34.55	38.50	42.44	46.39	51.28	55.85	62.15	77.91
2.67	72	7.218	192	19.249	. . .	. . .	. . .	. . .	. . .	. . .	. . .	. . .	17.56	21.70	25.77	29.80	33.81	38.76	43.37	49.73	65.56
2.77	26	2.607	72	7.218	16.21	17.32	20.50	21.93	23.35	23.67	26.83	27.62	31.57	35.51	39.46	43.40	47.35	52.23	56.80	63.11	78.86
2.80	40	4.010	112	11.229	11.56	12.71	15.97	17.42	18.86	19.19	22.38	23.18	27.16	31.13	35.09	39.04	43.00	47.90	52.47	58.79	74.56
2.81	32	3.208	90	9.023	14.19	15.31	18.51	19.95	21.38	21.69	24.87	25.66	29.62	33.57	37.53	41.47	45.42	50.31	54.88	61.19	76.95
2.86	28	2.807	80	8.020	15.37	16.49	19.67	21.10	22.53	22.84	26.01	26.80	30.76	34.70	38.65	42.60	46.54	51.43	56.00	62.31	78.07
Length Factor*					1.00	1.10	1.10	1.10	1.10	1.10	1.10	1.20	1.20	1.20	1.20	1.20	1.20	1.20	1.20	1.20	1.20

Center distance is greater than eight times the Small Sprocket and the Large Sprocket is not flanged. Large Sprocket should be ordered with flanges as a special.

* This length correction factor must be used to determine the proper belt width.

V-Drives
FHP Drives
Drive Component Accessories
DYNA-SYNC
HT200/HTD Synchronous Drives
HT500 Synchronous Drives
Roller Chain Sprockets

SELECTION

8MM Pitch HT200 Belt Drive Selection Table

Speed Ratio	Sprocket Combinations				Center Distance, Inches										
	Driver		Driven												
	No. of Teeth	Pitch Dia. Inches	No. of Teeth	Pitch Dia. Inches	720-8M	800-8M	840-8M	880-8M	920-8M	960-8M	1040-8M	1064-8M	1120-8M	1160-8M	1200-8M
Length Factor*					0.90	0.90	0.90	0.90	1.00	1.00	1.00	1.00	1.00	1.00	1.00
2.91	22	2.206	64	6.416	7.09	8.72	9.53	10.34	11.14	11.94	13.53	14.01	15.13	15.92	16.72
2.95	38	3.810	112	11.229	. . .	. . .	. . .	. . .	. . .	. . .	. . .	8.29	9.50	10.35	11.19
3.00	24	2.406	72	7.218	6.14	7.82	8.64	9.46	10.27	11.08	12.68	13.17	14.28	15.08	15.88
3.00	30	3.008	90	9.023	. . .	. . .	6.36	7.24	8.10	8.94	10.59	11.09	12.22	13.04	13.84
3.00	48	4.812	144	14.437	. . .	. . .	. . .	. . .	. . .	. . .	. . .	. . .	. . .	. . .	. . .
3.00	64	6.416	192	19.249	. . .	. . .	. . .	. . .	. . .	. . .	. . .	. . .	. . .	. . .	. . .
3.08	26	2.607	80	8.020	. . .	6.86	7.71	8.55	9.37	10.19	11.81	12.30	13.42	14.23	15.03
3.11	36	3.609	112	11.229	. . .	. . ..	. . .	. . .	. . .	. . .	7.88	8.41	9.63	10.48	11.32
3.21	28	2.807	90	9.023	. . .	. . .	6.48	7.37	8.22	9.07	10.73	11.22	12.36	13.18	13.98
3.27	22	2.206	72	7.218	6.27	7.95	8.77	9.59	10.41	11.22	12.82	13.31	14.43	15.23	16.02
3.27	44	4.411	144	14.437	. . .	. . .	. . .	. . .	. . .	. . .	. . .		. . .	. . .	. . .
3.29	34	3.409	112	11.229	. . .	. . .	. . .	. . .	. . .	. . .	8.00	8.54	9.75	10.61	11.45
3.33	24	2.406	80	8.020	. . .	6.99	7.84	8.68	9.50	10.33	11.95	12.44	13.56	14.37	15.17
3.43	56	5.614	192	19.249	. . .	. . .	. . .	. . .	. . .	. . .	. . .	. . .	. . .	. . .	. . .
3.46	26	2.607	90	9.023	. . .	. . .	6.61	7.49	8.35	9.20	10.86	11.35	12.50	13.31	14.12
3.50	32	3.208	112	11.229	. . .	. . .	. . .	. . .	. . .	. . .	8.12	8.66	9.88	10.74	11.58
3.60	40	4.010	144	14.437	. . .	. . .	. . .	. . .	. . .	. . .	. . .	. . .	. . .	. . .	. . .
3.64	22	2.206	80	8.020	. . .	7.12	7.97	8.81	9.64	10.46	12.09	12.58	13.70	14.51	15.31
3.73	30	3.008	112	11.229	. . .	. . .	. . .	. . .	. . .	. . .	8.24	8.78	10.01	10.87	11.71
3.75	24	2.406	90	9.023	. . .	. . .	6.73	7.62	8.48	9.33	10.99	11.49	12.63	13.45	14.26
3.79	38	3.810	144	14.437	. . .	. . .	. . .	. . .	. . .	. . .	. . .	. . .	. . .	. . .	. . .
4.00	28	2.807	112	11.229	. . .	. . .	. . .	. . .	. . .	. . .	8.36	8.91	10.13	10.99	11.84
4.00	36	3.609	144	14.437	. . .	. . .	. . .	. . .	. . .	. . .	. . .	. . .	. . .	. . .	. . .
4.00	48	4.812	192	19.249	. . .	. . .	. . .	. . .	. . .	. . .	. . .	. . .	. . .	. . .	. . .
4.09	22	2.206	90	9.023	. . .	5.92	6.85	7.74	8.61	9.46	11.12	11.62	12.77	13.59	14.40
4.24	34	3.409	144	14.437	. . .	. . .	. . .	. . .	. . .	. . .	. . .	. . .	. . .	. . .	. . .
4.31	26	2.607	112	11.229	. . .	. . .	. . .	. . .	. . .	. . .	8.48	9.03	10.26	11.12	11.97
4.36	44	4.411	192	19.249	. . .	. . .	. . .	. . .	. . .	. . .	. . .	. . .	. . .	. . .	. . .
4.50	32	3.208	144	14.437	. . .	. . .	. . .	. . .	. . .	. . .	. . .	. . .	. . .	. . .	. . .
4.67	24	2.406	112	11.229	. . .	. . .	. . .	. . .	. . .	. . .	8.60	9.15	10.38	11.25	12.10
4.80	30	3.008	144	14.437	. . .	. . .	. . .	. . .	. . .	. . .	. . .	. . .	. . .	. . .	. . .
4.80	40	4.010	192	19.249	. . .	. . .	. . .	. . .	. . .	. . .	. . .	. . .	. . .	. . .	. . .
5.05	38	3.810	192	19.249	. . .	. . .	. . .	. . .	. . .	. . .	. . .	. . .	. . .	. . .	. . .
5.09	22	2.206	112	11.229	. . .	. . .	. . .	. . .	. . .	. . .	8.72	9.27	10.51	11.38	12.23
5.14	28	2.807	144	14.437	. . .	. . .	. . .	. . .	. . .	. . .	. . .	. . .	. . .	. . .	. . .
5.33	36	3.609	192	19.249	. . .	. . .	. . .	. . .	. . .	. . .	. . .	. . .	. . .	. . .	. . .
5.54	26	2.607	144	14.437	. . .	. . .	. . .	. . .	. . .	. . .	. . .	. . .	. . .	. . .	. . .
5.65	34	3.409	192	19.249	. . .	. . .	. . .	. . .	. . .	. . .	. . .	. . .	. . .	. . .	. . .
6.00	24	2.406	144	14.437	. . .	. . .	. . .	. . .	. . .	. . .	. . .	. . .	. . .	. . .	. . .
6.00	32	3.208	192	19.249	. . .	. . .	. . .	. . .	. . .	. . .	. . .	. . .	. . .	. . .	. . .
6.40	30	3.008	192	19.249	. . .	. . .	. . .	. . .	. . .	. . .	. . .	. . .	. . .	. . .	. . .
6.55	22	2.206	144	14.437	. . .	. . .	. . .	. . .	. . .	. . .	. . .	. . .	. . .	. . .	. . .
6.86	28	2.807	192	19.249	. . .	. . .	. . .	. . .	. . .	. . .	. . .	. . .	. . .	. . .	. . .
Length Factor*					0.90	0.90	0.90	0.90	1.00	1.00	1.00	1.00	1.00	1.00	1.00

Center distance is greater than eight times the Small Sprocket and the Large Sprocket is not flanged. Large Sprocket should be ordered with flanges as a special.

* This length correction factor must be used to determine the proper belt width.

8MM Pitch HT200 Belt Drive Selection Table

Speed Ratio	Sprocket Combinations Driver No. of Teeth	Driver Pitch Dia. Inches	Driven No. of Teeth	Driven Pitch Dia. Inches	Center Distance, Inches 1224-8M	1280-8M	1440-8M	1512-8M	1584-8M	1600-8M	1760-8M	1800-8M	2000-8M	2200-8M	2400-8M	2600-8M	2800-8M	3048-8M	3280-8M	3600-8M	4400-8M
Length Factor*					1.00	1.10	1.10	1.10	1.10	1.10	1.10	1.20	1.20	1.20	1.20	1.20	1.20	1.20	1.20	1.20	1.20
2.91	22	2.206	64	6.416	17.19	18.30	21.47	22.90	24.32	24.63	27.79	28.59	32.53	36.47	40.42	44.36	48.30	53.19	57.75	64.06	79.82
2.95	38	3.810	112	11.229	11.69	12.84	16.10	17.56	19.01	19.33	22.53	23.33	27.31	31.27	35.24	39.19	43.15	48.05	52.62	58.94	74.71
3.00	24	2.406	72	7.218	16.36	17.47	20.65	22.08	23.50	23.81	26.98	27.77	31.72	35.67	39.61	43.55	47.50	52.39	56.96	63.26	79.02
3.00	30	3.008	90	9.023	14.33	15.45	18.65	20.09	21.52	21.84	25.01	25.81	29.77	33.72	37.68	41.62	45.57	50.46	55.03	61.34	77.11
3.00	48	4.812	144	14.437	. . .	. . .	12.27	13.80	15.30	15.63	18.91	19.73	23.76	27.77	31.76	35.74	39.71	44.62	49.21	55.54	71.33
3.00	64	6.416	192	19.249	. . .	. . .	. . .	. . .	. . .	. . .	. . .	. . .	18.08	22.23	26.31	30.36	34.37	39.33	43.95	50.31	66.16
3.08	26	2.607	80	8.020	15.51	16.63	19.81	21.25	22.67	22.99	26.16	26.95	30.90	34.85	38.80	42.75	46.70	51.58	56.15	62.46	78.22
3.11	36	3.609	112	11.229	11.82	12.98	16.24	17.70	19.15	19.47	22.67	23.47	27.45	31.42	35.39	39.34	43.30	48.20	52.77	59.09	74.86
3.21	28	2.807	90	9.023	14.47	15.59	18.80	20.23	21.67	21.98	25.16	25.96	29.92	33.87	37.83	41.77	45.72	50.61	55.19	61.50	77.26
3.27	22	2.206	72	7.218	16.50	17.61	20.79	22.22	23.65	23.96	27.13	27.92	31.87	35.82	39.76	43.71	47.65	52.54	57.11	63.41	79.17
3.27	44	4.411	144	14.437	. . .	. . .	12.52	14.06	15.56	15.89	19.18	20.00	24.04	28.05	32.05	36.03	40.00	44.92	49.51	55.84	71.64
3.29	34	3.409	112	11.229	11.95	13.11	16.38	17.84	19.29	19.61	22.81	23.61	27.60	31.57	35.53	39.49	43.45	48.35	52.92	59.24	75.02
3.33	24	2.406	80	8.020	15.65	16.77	19.96	21.39	22.82	23.14	26.31	27.10	31.05	35.00	38.96	42.90	46.85	51.74	56.31	62.61	78.38
3.43	56	5.614	192	19.249	. . .	. . .	. . .	. . .	. . .	. . .	13.39	14.29	18.60	22.77	26.86	30.91	34.94	39.90	44.53	50.89	66.75
3.46	26	2.607	90	9.023	14.61	15.73	18.94	20.38	21.81	22.13	25.31	26.10	30.06	34.02	37.98	41.92	45.87	50.76	55.34	61.65	77.41
3.50	32	3.208	112	11.229	12.08	13.24	16.52	17.98	19.43	19.75	22.95	23.76	27.74	31.71	35.68	39.64	43.60	48.50	53.07	59.39	75.17
3.60	40	4.010	144	14.437	. . .	. . .	12.78	14.32	15.82	16.16	19.45	20.27	24.32	28.34	32.34	36.32	40.29	45.21	49.80	56.13	71.94
3.64	22	2.206	80	8.020	15.80	16.91	20.10	21.54	22.96	23.28	26.45	27.25	31.20	35.15	39.11	43.05	47.00	51.89	56.46	62.77	78.53
3.73	30	3.008	112	11.229	12.21	13.38	16.65	18.11	19.56	19.89	23.10	23.90	27.88	31.86	35.83	39.79	43.75	48.64	53.22	59.54	75.32
3.75	24	2.406	90	9.023	14.75	15.87	19.08	20.52	21.95	22.27	25.45	26.25	30.21	34.17	38.13	42.07	46.02	50.92	55.49	61.80	77.57
3.79	38	3.810	144	14.437	. . .	. . .	12.90	14.45	15.96	16.29	19.59	20.41	24.46	28.48	32.48	36.46	40.44	45.36	49.95	56.28	72.09
4.00	28	2.807	112	11.229	12.35	13.51	16.79	18.25	19.70	20.03	23.24	24.04	28.03	32.00	35.97	39.93	43.89	48.79	53.37	59.69	75.47
4.00	36	3.609	144	14.437	. . .	9.42	13.03	14.57	16.09	16.42	19.72	20.54	24.60	28.62	32.62	36.61	40.59	45.50	50.10	56.43	72.24
4.00	48	4.812	192	19.249	. . .	. . .	. . .	. . .	. . .	. . .	13.88	14.78	19.12	23.30	27.41	31.47	35.50	40.47	45.10	51.47	67.34
4.09	22	2.206	90	9.023	14.88	16.01	19.22	20.66	22.10	22.42	25.60	26.40	30.36	34.32	38.27	42.22	46.17	51.07	55.64	61.95	77.72
4.24	34	3.409	144	14.437	. . .	9.53	13.16	14.70	16.22	16.55	19.86	20.68	24.74	28.76	32.76	36.75	40.73	45.65	50.25	56.58	72.39
4.31	26	2.607	112	11.229	12.48	13.64	16.93	18.39	19.84	20.17	23.38	24.18	28.17	32.15	36.12	40.08	44.04	48.94	53.52	59.84	75.63
4.36	44	4.411	192	19.249	. . .	. . .	. . .	. . .	. . .	. . .	4.12	15.03	19.38	25.57	27.68	31.74	35.78	40.75	45.39	51.76	67.63
4.50	32	3.208	144	14.437	. . .	9.65	13.28	14.83	16.35	16.68	19.99	20.81	24.88	28.90	32.91	36.89	40.88	45.80	50.39	56.73	72.54
4.67	24	2.406	112	11.229	12.61	13.77	17.06	18.53	19.98	20.30	23.52	24.32	28.32	32.29	36.27	40.23	44.19	49.09	53.67	59.99	75.78
4.80	30	3.008	144	14.437	. . .	9.77	13.41	14.96	16.48	16.81	20.13	20.95	25.01	29.04	33.05	37.04	41.02	45.94	50.54	56.88	72.69
4.80	40	4.010	192	19.249	. . .	. . .	. . .	. . .	. . .	. . .	14.37	15.27	19.63	23.83	27.95	32.02	36.05	41.03	45.67	52.05	67.93
5.05	38	3.810	192	19.249	. . .	. . .	. . .	. . .	. . .	. . .	14.49	15.40	19.76	23.96	28.08	32.15	36.19	41.18	45.82	52.19	68.08
5.09	22	2.206	112	11.229	12.74	13.90	17.20	18.67	20.12	20.44	23.66	24.47	28.46	32.44	36.41	40.38	44.34	49.24	53.82	60.14	75.93
5.14	28	2.807	144	14.437	. . .	9.89	13.53	15.09	16.61	16.94	20.26	21.08	25.15	29.18	33.19	37.18	41.17	46.09	50.69	57.02	72.84
5.33	36	3.609	192	19.249	. . .	. . .	. . .	. . .	. . .	. . .	14.61	15.52	19.89	24.09	28.22	32.29	36.33	41.32	45.96	52.34	68.22
5.54	26	2.607	144	14.437	. . .	10.00	13.66	15.21	16.74	17.07	20.39	21.22	25.29	29.32	33.33	37.32	41.31	46.23	50.83	57.17	72.99
5.65	34	3.409	192	19.249	. . .	. . .	. . .	. . .	. . .	. . .	14.73	15.64	20.02	24.23	28.35	32.43	36.47	41.46	46.10	52.48	68.37
6.00	24	2.406	144	14.437	. . .	10.12	13.78	15.34	16.87	17.20	20.53	21.35	25.43	29.46	33.47	37.47	41.45	46.38	50.98	57.32	73.14
6.00	32	3.208	192	19.249	. . .	. . .	. . .	. . .	. . .	. . .	14.85	15.76	20.14	24.36	28.49	32.56	36.61	41.60	46.24	52.63	68.52
6.40	30	3.008	192	19.249	. . .	. . .	. . .	. . .	. . .	. . .	14.97	15.89	20.27	24.49	28.62	32.70	36.75	41.74	46.38	52.77	68.66
6.55	22	2.206	144	14.437	8.80	10.24	13.91	15.47	17.00	17.33	20.66	21.49	25.56	29.60	33.62	37.61	41.60	46.53	51.13	57.47	73.29
6.86	28	2.807	192	19.249	. . .	. . .	. . .	. . .	. . .	. . .	15.09	16.01	20.40	24.62	28.75	32.84	36.89	41.88	46.53	52.91	68.81
Length Factor*					1.00	1.10	1.10	1.10	1.10	1.10	1.10	1.20	1.20	1.20	1.20	1.20	1.20	1.20	1.20	1.20	1.20

Center distance is greater than eight times the Small Sprocket and the Large Sprocket is not flanged.
Large Sprocket should be ordered with flanges as a special.

* This length correction factor must be used to determine the proper belt width.

FEATURES/BENEFITS PAGE PT11-2
SPECIFICATIONS PAGE PT11-4
ENGINEERING/TECHNICAL PAGE PT11-64

SELECTION

14MM Pitch HT200 Belt Drive Selection Table

Speed Ratio	Sprocket Combinations				Center Distance, Inches										
	Driver		Driven												
	No. of Teeth	Pitch Dia. Inches	No. of Teeth	Pitch Dia. Inches	966-14M	1190-14M	1400-14M	1610-14M	1778-14M	1890-14M	2100-14M	2310-14M	2450-14M	2590-14M	2800-14M
Length Factor*					0.80	0.80	0.90	0.90	0.95	0.95	1.00	1.00	1.00	1.05	1.05
1.00	28	4.912	28	4.912	11.30	15.71	19.84	23.98	27.28	29.49	33.62	37.75	40.51	43.27	47.40
1.00	29	5.088	29	5.088	11.02	15.43	19.57	23.70	27.01	29.21	33.35	37.48	40.24	42.99	47.13
1.00	30	5.263	30	5.263	10.75	15.16	19.29	23.43	26.73	28.94	33.07	37.20	39.96	42.72	46.85
1.00	32	5.614	32	5.614	10.20	14.61	18.74	22.88	26.18	28.39	32.52	36.65	39.41	42.17	46.30
1.00	34	5.965	34	5.965	9.65	14.06	18.19	22.33	25.63	27.84	31.97	36.10	38.86	41.62	45.75
1.00	36	6.316	36	6.316	9.09	13.50	17.64	21.77	25.08	27.28	31.42	35.55	38.31	41.06	45.20
1.00	38	6.667	38	6.667	8.54	12.95	17.09	21.22	24.53	26.73	30.87	35.00	37.76	40.51	44.65
1.00	40	7.018	40	7.018	7.99	12.40	16.54	20.67	23.98	26.18	30.32	34.45	37.21	39.96	44.10
1.00	44	7.720	44	7.720	. . .	11.30	15.43	19.57	22.87	25.08	29.21	33.34	36.10	38.86	42.99
1.00	48	8.421	48	8.421	. . .	10.20	14.33	18.47	21.77	23.98	28.11	32.24	35.00	37.76	41.89
1.00	52	9.123	52	9.123	. . .	. . .	13.23	17.36	20.67	22.87	27.01	31.14	33.90	36.65	40.79
1.00	56	9.825	56	9.825	. . .	. . .	12.13	16.26	19.57	21.77	25.91	30.04	32.80	35.55	39.69
1.00	60	10.527	60	10.527	. . .	. . .	. . .	15.16	18.46	20.67	24.80	28.93	31.69	34.45	38.58
1.00	64	11.229	64	11.229	. . .	. . .	. . .	14.06	17.36	19.57	23.70	27.83	30.59	33.35	37.48
1.00	68	11.930	68	11.930	. . .	. . .	. . .	12.96	16.26	18.47	22.60	26.73	29.49	32.25	36.38
1.00	72	12.632	72	12.632	. . .	. . .	. . .	. . .	15.16	17.36	21.50	25.63	28.39	31.14	35.28
1.00	80	14.036	80	14.036	. . .	. . .	. . .	. . .	. . .	15.16	19.29	23.42	26.18	28.94	33.07
1.03	29	5.088	30	5.263	10.88	15.30	19.43	23.57	26.87	29.08	33.21	37.34	40.10	42.86	46.99
1.04	28	4.912	29	5.088	11.16	15.57	19.71	23.84	27.15	29.35	33.49	37.62	40.38	43.13	47.27
1.05	38	6.667	40	7.018	8.26	12.68	16.81	20.95	24.25	26.46	30.59	34.72	37.48	40.24	44.37
1.06	36	6.316	38	6.667	8.82	13.23	17.36	21.50	24.80	27.01	31.14	35.27	38.03	40.79	44.92
1.06	34	5.965	36	6.316	9.37	13.78	17.91	22.05	25.35	27.56	31.69	35.82	38.58	41.34	45.47
1.06	68	11.930	72	12.632	. . .	. . .	. . .	. . .	15.71	17.91	22.05	26.18	28.94	31.69	35.83
1.06	32	5.614	34	5.965	9.92	14.33	18.47	22.60	25.91	28.11	32.25	36.38	39.14	41.89	46.03
1.06	64	11.229	68	11.930	. . .	. . .	. . .	13.50	16.81	19.01	23.15	27.28	30.04	32.79	36.93
1.07	30	5.263	32	5.614	10.47	14.88	19.02	23.15	26.46	28.66	32.80	36.93	39.69	42.44	46.58
1.07	60	10.527	64	11.229	. . .	. . .	. . .	14.60	17.91	20.11	24.25	28.38	31.14	33.90	38.03
1.07	28	4.912	30	5.263	11.02	15.43	19.57	23.70	27.01	29.21	33.35	37.48	40.24	42.99	47.13
1.07	56	9.825	60	10.527	. . .	. . .	11.57	15.71	19.01	21.22	25.35	29.48	32.24	35.00	39.13
1.08	52	9.123	56	9.825	. . .	. . .	12.67	16.81	20.12	22.32	26.46	30.59	33.35	36.10	40.24
1.08	48	8.421	52	9.123	. . .	9.64	13.78	17.91	21.22	23.42	27.56	31.69	34.45	37.20	41.34
1.09	44	7.720	48	8.421	. . .	10.74	14.88	19.01	22.32	24.53	28.66	32.79	35.55	38.31	42.44
1.10	40	7.018	44	7.720	. . .	11.84	15.98	20.12	23.42	25.63	29.76	33.89	36.65	39.41	43.54
1.10	29	5.088	32	5.614	10.61	15.02	19.15	23.29	26.59	28.80	32.93	37.06	39.82	42.58	46.71
1.11	36	6.316	40	7.018	8.54	12.95	17.08	21.22	24.52	26.73	30.87	35.00	37.76	40.51	44.65
1.11	72	12.632	80	14.036	. . .	. . .	. . .	. . .	14.04	16.24	20.38	24.51	27.28	30.03	34.17
1.12	34	5.965	38	6.667	9.09	13.5.0	17.64	21.77	25.08	27.28	31.42	35.55	38.31	41.06	45.20
1.13	32	5.614	36	6.316	9.64	14.05	18.19	22.32	25.63	27.83	31.97	36.10	38.86	41.61	45.75
1.13	64	11.229	72	12.632	. . .	. . .	. . .	12.94	16.24	18.45	22.59	26.72	29.48	32.24	36.37
1.13	80	14.036	90	15.790	. . .	. . .	. . .	. . .	. . .	. . .	17.89	22.03	24.79	27.55	31.68
Length Factor*					0.80	0.80	0.90	0.90	0.95	0.95	1.00	1.00	1.00	1.05	1.05

Center distance is greater than eight times the Small Sprocket and the Large Sprocket is not flanged. Large Sprocket should be ordered with flanges as a special.

* This length correction factor must be used to determine the proper belt width.

14MM Pitch HT200 Belt Drive Selection Table

Speed Ratio	Sprocket Combinations				Center Distance, Inches										
	Driver		Driven												
	No. of Teeth	Pitch Dia. Inches	No. of Teeth	Pitch Dia. Inches	3150-14M	3360-14M	3500-14M	3850-14M	4326-14M	4578-14M	4956-14M	5320-14M	5740-14M	6160-14M	6860-14M
Length Factor*					1.05	1.10	1.10	1.10	1.10	1.10	1.10	1.10	1.10	1.10	1.10
1.00	28	4.912	28	4.912	54.29	58.42	61.18	68.07	77.44	82.40	89.84	97.01	105.27	113.54	127.32
1.00	29	5.088	29	5.088	54.02	58.15	60.91	67.79	77.16	82.13	89.57	96.73	105.00	113.27	127.05
1.00	30	5.263	30	5.263	53.74	57.87	60.63	67.52	76.89	81.85	89.29	96.46	104.72	112.99	126.77
1.00	32	5.614	32	5.614	53.19	57.32	60.08	66.97	76.34	81.30	88.74	95.91	104.17	112.44	126.22
1.00	34	5.965	34	5.965	52.64	56.77	59.53	66.42	75.79	80.75	88.19	95.36	103.62	111.89	125.67
1.00	36	6.316	36	6.316	52.09	56.22	58.98	65.86	75.23	80.20	87.64	94.80	103.07	111.34	125.12
1.00	38	6.667	38	6.667	51.54	55.67	58.43	65.31	74.68	79.65	87.09	94.25	102.52	110.79	124.57
1.00	40	7.018	40	7.018	50.99	55.12	57.88	64.76	74.13	79.10	86.54	93.70	101.97	110.24	124.02
1.00	44	7.720	44	7.720	49.88	54.01	56.77	63.66	73.03	77.99	85.43	92.60	100.86	109.13	122.91
1.00	48	8.421	48	8.421	48.78	52.91	55.67	62.56	71.93	76.89	84.33	91.50	99.76	108.03	121.81
1.00	52	9.123	52	9.123	47.68	51.81	54.57	61.45	70.82	75.79	83.23	90.39	98.66	106.93	120.71
1.00	56	9.825	56	9.825	46.58	50.71	53.47	60.35	69.72	74.69	82.13	89.29	97.56	105.83	119.61
1.00	60	10.527	60	10.527	45.47	49.60	52.36	59.25	68.62	73.58	81.02	88.19	96.45	104.72	118.50
1.00	64	11.229	64	11.229	44.37	48.50	51.26	58.15	67.52	72.48	79.92	87.09	95.35	103.62	117.40
1.00	68	11.930	68	11.930	43.27	47.40	50.16	57.05	66.42	71.38	78.82	85.99	94.25	102.52	116.30
1.00	72	12.632	72	12.632	42.17	46.30	49.06	55.94	65.31	70.28	77.72	84.88	93.15	101.42	115.20
1.00	80	14.036	80	14.036	39.96	44.09	46.85	53.74	63.11	68.07	75.51	82.68	90.94	99.21	112.99
1.03	29	5.088	30	5.263	53.88	58.01	60.77	67.66	77.03	81.99	89.43	96.60	104.86	113.13	126.91
1.04	28	4.912	29	5.088	54.16	58.29	61.05	67.93	77.30	82.27	89.71	96.87	105.14	113.41	127.19
1.05	38	6.667	40	7.018	51.26	55.39	58.15	65.04	74.41	79.37	86.81	93.98	102.24	110.51	124.29
1.06	36	6.316	38	6.667	51.81	55.94	58.70	65.59	74.96	79.92	87.36	94.53	102.79	111.06	124.84
1.06	34	5.965	36	6.316	52.36	56.49	59.25	66.14	75.51	80.47	87.91	95.08	103.34	111.61	125.39
1.06	68	11.930	72	12.632	42.72	46.85	49.61	56.49	65.86	70.83	78.27	85.43	93.70	101.97	115.75
1.06	32	5.614	34	5.965	52.92	57.05	59.81	66.69	76.06	81.03	88.47	95.63	103.90	112.17	125.95
1.06	64	11.229	68	11.930	43.82	47.95	50.71	57.59	66.97	71.93	79.37	86.54	94.80	103.07	116.85
1.07	30	5.263	32	5.614	53.47	57.60	60.36	67.24	76.61	81.58	89.02	96.18	104.45	112.72	126.50
1.07	60	10.527	64	11.229	44.92	49.05	51.81	58.70	68.07	73.03	80.47	87.64	95.90	104.17	117.95
1.07	28	4.912	30	5.263	54.02	58.15	60.91	67.79	77.16	82.13	89.57	96.73	105.00	113.27	127.05
1.07	56	9.825	60	10.527	46.02	50.15	52.91	59.80	69.17	74.13	81.57	88.74	97.00	105.27	119.06
1.08	52	9.123	56	9.825	47.13	51.26	54.02	60.90	70.27	75.24	82.68	89.84	98.11	106.38	120.16
1.08	48	8.421	52	9.123	48.23	52.36	55.12	62.00	71.38	76.34	83.78	90.95	99.21	107.48	121.26
1.09	44	7.720	48	8.421	49.33	53.46	56.22	63.11	72.48	77.44	84.88	92.05	100.31	108.58	122.36
1.10	40	7.018	44	7.720	50.43	54.56	57.32	64.21	73.58	78.54	85.98	93.15	101.41	109.68	123.46
1.10	29	5.088	32	5.614	53.60	57.73	60.49	67.38	76.75	81.71	89.15	96.32	104.58	112.85	126.63
1.11	36	6.316	40	7.018	51.54	55.67	58.43	65.31	74.68	79.65	87.09	94.25	102.52	110.79	124.57
1.11	72	12.632	80	14.036	41.06	45.19	47.95	54.84	64.21	69.17	76.61	83.78	92.04	100.31	114.09
1.12	34	5.965	38	6.667	52.09	56.22	58.98	65.86	75.23	80.20	87.64	94.80	103.07	111.34	125.12
1.13	32	5.614	36	6.316	52.64	56.77	59.53	66.41	75.78	80.75	88.19	95.35	103.62	111.89	125.67
1.13	64	11.229	72	12.632	43.26	47.39	50.15	57.04	66.41	71.38	78.82	85.98	94.25	102.52	116.30
1.13	80	14.036	90	15.790	38.57	42.71	45.47	52.35	61.72	66.69	74.13	81.29	89.56	97.83	111.61
Length Factor*					1.05	1.10	1.10	1.10	1.10	1.10	1.10	1.10	1.10	1.10	1.10

Center distance is greater than eight times the Small Sprocket and the Large Sprocket is not flanged. Large Sprocket should be ordered with flanges as a special.

* This length correction factor must be used to determine the proper belt width.

V-Drives
FHP Drives
Drive Component Accessories
DYNA-SYNC
HT200/HTD Synchronous Drives
HT500 Synchronous Drives
Roller Chain Sprockets

SELECTION

14MM Pitch HT200 Belt Drive Selection Table

Speed Ratio	Sprocket Combinations				Center Distance, Inches										
	Driver		Driven												
	No. of Teeth	Pitch Dia. Inches	No. of Teeth	Pitch Dia. Inches	966-14M	1190-14M	1400-14M	1610-14M	1778-14M	1890-14M	2100-14M	2310-14M	2450-14M	2590-14M	2800-14M
Length Factor*					0.80	0.80	0.90	0.90	0.95	0.95	1.00	1.00	1.00	1.05	1.05
1.13	30	5.263	34	5.965	10.19	14.60	18.74	22.87	26.18	28.38	32.52	36.65	39.41	42.17	46.30
1.13	60	10.527	68	11.930	. . .	. . .	. . .	14.04	17.35	19.55	23.69	27.82	30.58	33.34	37.48
1.14	28	4.912	32	5.614	10.74	15.15	19.29	23.43	26.73	28.94	33.07	37.20	39.96	42.72	46.85
1.14	56	9.825	64	11.229	. . .	. . .	. . .	15.14	18.45	20.66	24.79	28.93	31.69	34.44	38.58
1.15	52	9.123	60	10.527	. . .	. . .	12.11	16.25	19.55	21.76	25.90	30.03	32.79	35.54	39.68
1.16	38	6.667	44	7.720	. . .	12.11	16.25	20.39	23.69	25.90	30.04	34.17	36.93	39.68	43.82
1.17	48	8.421	56	9.825	. . .	. . .	13.21	17.35	20.66	22.86	27.00	31.13	33.89	36.65	40.78
1.17	29	5.088	34	5.965	10.32	14.74	18.87	23.01	26.32	28.52	32.66	36.79	39.55	42.30	46.44
1.18	34	5.965	40	7.018	8.80	13.22	17.36	21.49	24.80	27.00	31.14	35.27	38.03	40.78	44.92
1.18	68	11.930	80	14.036	. . .	. . .	. . .	. . .	14.57	16.78	20.92	25.05	27.82	30.57	34.71
1.18	44	7.720	52	9.123	. . .	10.17	14.31	18.45	21.76	23.97	28.10	32.23	34.99	37.75	41.89
1.19	32	5.614	38	6.667	9.35	13.77	17.91	22.04	25.35	27.55	31.69	35.82	38.58	41.34	45.47
1.20	30	5.263	36	6.316	9.91	14.32	18.46	22.59	25.90	28.11	32.24	36.37	39.13	41.89	46.02
1.20	40	7.018	48	8.421	. . .	11.28	15.42	19.56	22.86	25.07	29.21	33.34	36.10	38.85	42.99
1.20	60	10.527	72	12.632	. . .	. . .	. . .	13.46	16.78	18.99	23.13	27.26	30.02	32.78	36.92
1.21	28	4.912	34	5.965	10.46	14.87	19.01	23.15	26.45	28.66	32.79	36.92	39.68	42.44	46.57
1.21	56	9.825	68	11.930	. . .	. . .	. . .	14.57	17.88	20.09	24.23	28.36	31.13	33.88	38.02
1.22	36	6.316	44	7.720	7.96	12.38	16.52	20.66	23.97	26.17	30.31	34.44	37.20	39.95	44.09
1.23	52	9.123	64	11.229	. . .	. . .	11.53	15.68	18.99	21.19	25.33	29.47	32.23	34.98	39.12
1.24	29	5.088	36	6.316	10.04	14.46	18.59	22.73	26.04	28.24	32.38	36.51	39.27	42.02	46.16
1.25	32	5.614	40	7.018	9.07	13.49	17.62	21.76	25.07	27.27	31.41	35.54	38.30	41.06	45.19
1.25	48	8.421	60	10.527	. . .	. . .	12.63	16.78	20.09	22.30	26.44	30.57	33.33	36.09	40.22
1.25	64	11.229	80	14.036	. . .	. . .	. . .	. . .	15.09	17.30	21.45	25.59	28.35	31.11	35.25
1.25	72	12.632	90	15.790	. . .	. . .	. . .	. . .	. . .	14.80	18.95	23.09	25.86	28.62	32.76
1.26	38	6.667	48	8.421	. . .	11.54	15.69	19.83	23.13	25.34	29.48	33.61	36.37	39.13	43.26
1.27	30	5.263	38	6.667	9.62	14.04	18.18	22.31	25.62	27.83	31.96	36.09	38.85	41.61	45.74
1.27	44	7.720	56	9.825	. . .	9.59	13.74	17.88	21.19	23.40	27.54	31.67	34.43	37.19	41.33
1.29	28	4.912	36	6.316	10.17	14.59	18.73	22.87	26.17	28.38	32.51	36.64	39.41	42.16	46.30
1.29	56	9.825	72	12.632	. . .	. . .	. . .	13.99	17.31	19.52	23.66	27.80	30.56	33.32	37.46
1.29	34	5.965	44	7.720	8.22	12.65	16.79	20.93	24.24	26.44	30.58	34.71	37.47	40.23	44.36
1.30	40	7.018	52	9.123	. . .	10.70	14.85	18.99	22.30	24.51	28.64	32.78	35.54	38.29	42.43
1.31	52	9.123	68	11.930	. . .	. . .	. . .	15.09	18.41	20.62	24.77	28.90	31.66	34.42	38.56
1.31	29	5.088	38	6.667	9.75	14.17	18.31	22.45	25.76	27.96	32.10	36.23	38.99	41.75	45.88
1.32	68	11.930	90	15.790	. . .	. . .	. . .	. . .	. . .	15.31	19.47	23.62	26.39	29.15	33.29
1.33	30	5.263	40	7.018	9.33	13.75	17.89	22.03	25.34	27.55	31.68	35.81	38.57	41.33	45.47
1.33	36	6.316	48	8.421	. . .	11.80	15.95	20.09	23.40	25.61	29.75	33.88	36.64	39.40	43.53
1.33	48	8.421	64	11.229	. . .	. . .	12.05	16.20	19.52	21.73	25.87	30.00	32.77	35.52	39.66
1.33	60	10.527	80	14.036	. . .	. . .	. . .	. . .	15.61	17.83	21.98	26.12	28.88	31.64	35.79
1.36	28	4.912	38	6.667	9.88	14.30	18.45	22.58	25.89	28.10	32.23	36.37	39.13	41.88	46.02
1.36	44	7.720	60	10.527	. . .	. . .	13.15	17.31	20.62	22.83	26.97	31.11	33.87	36.63	40.76
Length Factor*					0.80	0.80	0.90	0.90	0.95	0.95	1.00	1.00	1.00	1.05	1.05

Center distance is greater than eight times the Small Sprocket and the Large Sprocket is not flanged. Large Sprocket should be ordered with flanges as a special.

* This length correction factor must be used to determine the proper belt width.

FEATURES/BENEFITS PAGE PT11-2 | SPECIFICATIONS PAGE PT11-4 | ENGINEERING/TECHNICAL PAGE PT11-64

14MM Pitch HT200 Belt Drive Selection Table

Speed Ratio	Sprocket Combinations				Center Distance, Inches										
	Driver		Driven												
	No. of Teeth	Pitch Dia. Inches	No. of Teeth	Pitch Dia. Inches	3150-14M	3360-14M	3500-14M	3850-14M	4326-14M	4578-14M	4956-14M	5320-14M	5740-14M	6160-14M	6860-14M
Length Factor*					1.05	1.10	1.10	1.10	1.10	1.10	1.10	1.10	1.10	1.10	1.10
1.13	30	5.263	34	5.965	53.19	57.32	60.08	66.97	76.34	81.30	88.74	95.91	104.17	112.44	126.22
1.13	60	10.527	68	11.930	44.37	48.50	51.26	58.14	67.51	72.48	79.92	87.08	95.35	103.62	117.40
1.14	28	4.912	32	5.614	53.74	57.87	60.63	67.52	76.89	81.85	89.29	96.46	104.72	112.99	126.77
1.14	56	9.825	64	11.229	45.47	49.60	52.36	59.25	68.62	73.58	81.02	88.19	96.45	104.72	118.50
1.15	52	9.123	60	10.527	46.57	50.70	53.46	60.35	69.72	74.68	82.12	89.29	97.55	105.82	119.60
1.16	38	6.667	44	7.720	50.71	54.84	57.60	64.48	73.85	78.82	86.26	93.42	101.69	109.96	123.74
1.17	48	8.421	56	9.825	47.67	51.80	54.57	61.45	70.82	75.79	83.23	90.39	98.66	106.93	120.71
1.17	29	5.088	34	5.965	53.33	57.46	60.22	67.10	76.47	81.44	88.88	96.04	104.31	112.58	126.36
1.18	34	5.965	40	7.018	51.81	55.94	58.70	65.59	74.96	79.92	87.36	94.53	102.79	111.06	124.84
1.18	68	11.930	80	14.036	41.60	45.73	48.49	55.38	64.75	69.72	77.16	84.32	92.59	100.86	114.64
1.18	44	7.720	52	9.123	48.78	52.91	55.67	62.55	71.92	76.89	84.33	91.49	99.76	108.03	121.81
1.19	32	5.614	38	6.667	52.36	56.49	59.25	66.14	75.51	80.47	87.91	95.08	103.34	111.61	125.39
1.20	30	5.263	36	6.316	52.91	57.04	59.80	66.69	76.06	81.02	88.46	95.63	103.89	112.16	125.94
1.20	40	7.018	48	8.421	49.88	54.01	56.77	63.66	73.03	77.99	85.43	92.60	100.86	109.13	122.91
1.20	60	10.527	72	12.632	43.81	47.94	50.70	57.59	66.96	71.92	79.36	86.53	94.80	103.07	116.85
1.21	28	4.912	34	5.965	53.46	57.59	60.35	67.24	76.61	81.58	89.02	96.18	104.45	112.72	126.50
1.21	56	9.825	68	11.930	44.91	49.04	51.80	58.69	68.06	73.03	80.47	87.63	95.90	104.17	117.95
1.22	36	6.316	44	7.720	50.98	55.11	57.87	64.76	74.13	79.09	86.53	93.70	101.96	110.23	124.01
1.23	52	9.123	64	11.229	46.01	50.14	52.91	59.79	69.16	74.13	81.57	88.73	97.00	105.27	119.05
1.24	29	5.088	36	6.316	53.05	57.18	59.94	66.83	76.20	81.16	88.60	95.77	104.03	112.30	126.08
1.25	32	5.614	40	7.018	52.08	56.21	58.97	65.86	75.23	80.20	87.64	94.80	103.07	111.34	125.12
1.25	48	8.421	60	10.527	47.12	51.25	54.01	60.89	70.27	75.23	82.67	89.84	98.10	106.37	120.15
1.25	64	11.229	80	14.036	42.14	46.28	49.04	55.92	65.30	70.26	77.70	84.87	93.14	101.41	115.19
1.25	72	12.632	90	15.790	39.66	43.79	46.55	53.44	62.81	67.78	75.22	82.39	90.65	98.92	112.71
1.26	38	6.667	48	8.421	50.15	54.28	57.04	63.93	73.30	78.26	85.71	92.87	101.14	109.41	123.19
1.27	30	5.263	38	6.667	52.64	56.77	59.53	66.41	75.78	80.75	88.19	95.35	103.62	111.89	125.67
1.27	44	7.720	56	9.825	48.22	52.35	55.11	62.00	71.37	76.33	83.77	90.94	99.20	107.48	121.26
1.29	28	4.912	36	6.316	53.19	57.32	60.08	66.96	76.33	81.30	88.74	95.90	104.17	112.44	126.22
1.29	56	9.825	72	12.632	44.35	48.48	51.24	58.13	67.50	72.47	79.91	87.08	95.34	103.61	117.39
1.29	34	5.965	44	7.720	51.25	55.38	58.15	65.03	74.40	79.37	86.81	93.97	102.24	110.51	124.29
1.30	40	7.018	52	9.123	49.32	53.45	56.21	63.10	72.47	77.44	84.88	92.04	100.31	108.58	122.36
1.31	52	9.123	68	11.930	45.45	49.59	52.35	59.23	68.61	73.57	81.01	88.18	96.44	104.72	118.50
1.31	29	5.088	38	6.667	52.77	56.90	59.66	66.55	75.92	80.88	88.32	95.49	103.75	112.02	125.81
1.32	68	11.930	90	15.790	40.19	44.33	47.09	53.98	63.35	68.32	75.76	82.93	91.20	99.47	113.25
1.33	30	5.263	40	7.018	52.36	56.49	59.25	66.13	75.50	80.47	87.91	95.08	103.34	111.61	125.39
1.33	36	6.316	48	8.421	50.42	54.56	57.32	64.20	73.57	78.54	85.98	93.14	101.41	109.68	123.46
1.33	48	8.421	64	11.229	46.56	50.69	53.45	60.34	69.71	74.67	82.11	89.28	97.55	105.82	119.60
1.33	60	10.527	80	14.036	42.68	46.82	49.58	56.47	65.84	70.81	78.25	85.42	93.68	101.95	115.73
1.36	28	4.912	38	6.667	52.91	57.04	59.80	66.69	76.06	81.02	88.46	95.63	103.89	112.16	125.94
1.36	44	7.720	60	10.527	47.66	51.79	54.55	61.44	70.81	75.78	83.22	90.38	98.65	106.92	120.70
Length Factor*					1.05	1.10	1.10	1.10	1.10	1.10	1.10	1.10	1.10	1.10	1.10

Center distance is greater than eight times the Small Sprocket and the Large Sprocket is not flanged. Large Sprocket should be ordered with flanges as a special.

* This length correction factor must be used to determine the proper belt width.

V-Drives
FHP Drives
Drive Component Accessories
DYNA-SYNC
HT200/HTD Synchronous Drives
HT500 Synchronous Drives
Roller Chain Sprockets

SELECTION

14MM Pitch HT200 Belt Drive Selection Table

Speed Ratio	Sprocket Combinations				Center Distance, Inches										
	Driver		Driven												
	No. of Teeth	Pitch Dia. Inches	No. of Teeth	Pitch Dia. Inches	966-14M	1190-14M	1400-14M	1610-14M	1778-14M	1890-14M	2100-14M	2310-14M	2450-14M	2590-14M	2800-14M
Length Factor*					0.80	0.80	0.90	0.90	0.95	0.95	1.00	1.00	1.00	1.05	1.05
1.37	38	6.667	52	9.123	. . .	10.95	15.11	19.25	22.57	24.77	28.91	33.05	35.81	38.56	42.70
1.38	32	5.614	44	7.720	8.48	12.91	17.05	21.20	24.50	26.71	30.85	34.98	37.74	40.50	44.64
1.38	29	5.088	40	7.018	9.46	13.88	18.03	22.17	25.47	27.68	31.82	35.95	38.71	41.47	45.60
1.39	52	9.123	72	12.632	. . .	. . .	. . .	14.50	17.83	20.04	24.19	28.33	31.09	33.85	37.99
1.40	40	7.018	56	9.825	. . .	10.10	14.26	18.41	21.73	23.94	28.08	32.21	34.97	37.73	41.87
1.40	80	14.036	112	19.650	. . .	. . .	. . .	. . .	. . .	. . .	. . .	18.80	21.59	24.37	28.52
1.41	64	11.229	90	15.790	. . .	. . .	. . .	. . .	. . .	15.82	19.99	24.14	26.91	29.68	33.82
1.41	34	5.965	48	8.421	. . .	12.06	16.21	20.36	23.67	25.88	30.02	34.15	36.91	39.67	43.80
1.42	48	8.421	68	11.930	. . .	. . .	11.44	15.61	18.94	21.15	25.30	29.43	32.20	34.96	39.10
1.43	28	4.912	40	7.018	9.59	14.02	18.16	22.30	25.61	27.82	31.95	36.08	38.85	41.60	45.74
1.43	56	9.825	80	14.036	. . .	. . .	. . .	12.78	16.12	18.34	22.50	26.65	29.41	32.18	36.32
1.44	36	6.316	52	9.123	. . .	11.21	15.37	19.52	22.83	25.04	29.18	33.31	36.08	38.83	42.97
1.46	44	7.720	64	11.229	. . .	. . .	12.55	16.72	20.04	22.25	26.40	30.54	33.30	36.06	40.20
1.47	30	5.263	44	7.720	8.73	13.17	17.32	21.46	24.77	26.98	31.12	35.25	38.01	40.77	44.91
1.47	38	6.667	56	9.825	. . .	10.35	14.52	18.68	21.99	24.20	28.34	32.48	35.24	38.00	42.14
1.50	32	5.614	48	8.421	7.8.7	12.32	16.48	20.62	23.94	26.14	30.28	34.42	37.18	39.94	44.07
1.50	40	7.018	60	10.527	. . .	9.48	13.67	17.83	21.15	23.36	27.50	31.64	34.41	37.16	41.30
1.50	48	8.421	72	12.632	. . .	. . .	. . .	15.01	18.34	20.56	24.72	28.86	31.62	34.39	38.53
1.50	60	10.527	90	15.790	. . .	. . .	. . .	. . .	14.08	16.32	20.50	24.66	27.43	30.20	34.35
1.52	29	5.088	44	7.720	8.86	13.30	17.45	21.60	24.91	27.11	31.25	35.39	38.15	40.90	45.04
1.53	34	5.965	52	9.123	. . .	11.47	15.63	19.78	23.10	25.31	29.45	33.58	36.35	39.10	43.24
1.54	52	9.123	80	14.036	. . .	. . .	. . .	13.28	16.63	18.86	23.02	27.17	29.94	32.70	36.85
1.55	44	7.720	68	11.930	. . .	. . .	11.94	16.12	19.45	21.67	25.82	29.96	32.73	35.49	39.63
1.56	36	6.316	56	9.825	. . .	10.60	14.78	18.94	22.25	24.46	28.61	32.75	35.51	38.27	42.41
1.56	72	12.632	112	19.650	. . .	. . .	. . .	. . .	. . .	. . .	. . .	19.80	22.60	25.39	29.56
1.57	28	4.912	44	7.720	8.98	13.43	17.58	21.73	25.04	27.25	31.39	35.52	38.28	41.04	45.18
1.58	38	6.667	60	10.527	. . .	9.73	13.92	18.09	21.41	23.62	27.77	31.91	34.67	37.43	41.57
1.60	30	5.263	48	8.421	8.11	12.58	16.74	20.89	24.20	26.41	30.55	34.69	37.45	40.21	44.34
1.60	40	7.018	64	11.229	. . .	. . .	13.06	17.24	20.56	22.78	26.93	31.07	33.83	36.59	40.73
1.61	56	9.825	90	15.790	. . .	. . .	. . .	. . .	14.58	16.82	21.01	25.18	27.95	30.72	34.87
1.63	32	5.614	52	9.123	. . .	11.72	15.89	20.04	23.36	25.57	29.71	33.85	36.61	39.37	43.51
1.64	44	7.720	72	12.632	. . .	. . .	11.31	15.52	18.86	21.08	25.24	29.38	32.15	34.91	39.06
1.65	34	5.965	56	9.825	. . .	10.85	15.03	19.20	22.52	24.73	28.87	33.01	35.78	38.54	42.67
1.65	68	11.930	112	19.650	. . .	. . .	. . .	. . .	. . .	. . .	. . .	20.30	23.10	25.89	30.07
1.66	29	5.088	48	8.421	8.24	12.71	16.87	21.02	24.33	26.54	30.68	34.82	37.58	40.34	44.48
1.67	36	6.316	60	10.527	. . .	9.97	14.17	18.35	21.67	23.88	28.03	32.17	34.94	37.70	41.84
1.67	48	8.421	80	14.036	. . .	. . .	. . .	13.77	17.13	19.36	23.53	27.69	30.46	33.23	37.38
1.68	38	6.667	64	11.229	. . .	. . .	13.31	17.49	20.82	23.04	27.19	31.33	34.10	36.86	41.00
1.70	40	7.018	68	11.930	. . .	. . .	12.43	16.63	19.97	22.19	26.34	30.49	33.26	36.02	40.16
1.71	28	4.912	48	8.421	8.36	12.83	17.00	21.15	24.47	26.68	30.82	34.95	37.72	40.48	44.61
Length Factor*					0.80	0.80	0.90	0.90	0.95	0.95	1.00	1.00	1.00	1.05	1.05

Center distance is greater than eight times the Small Sprocket and the Large Sprocket is not flanged. Large Sprocket should be ordered with flanges as a special.

* This length correction factor must be used to determine the proper belt width.

FEATURES/BENEFITS PAGE PT11-2
SPECIFICATIONS PAGE PT11-4
ENGINEERING/TECHNICAL PAGE PT11-64

14MM Pitch HT200 Belt Drive Selection Table

Speed Ratio	Sprocket Combinations				Center Distance, Inches										
	Driver		Driven												
	No. of Teeth	Pitch Dia. Inches	No. of Teeth	Pitch Dia. Inches	3150-14M	3360-14M	3500-14M	3850-14M	4326-14M	4578-14M	4956-14M	5320-14M	5740-14M	6160-14M	6860-14M
Length Factor*					1.05	1.10	1.10	1.10	1.10	1.10	1.10	1.10	1.10	1.10	1.10
1.37	38	6.667	52	9.123	49.59	53.72	56.49	63.37	72.74	77.71	85.15	92.32	100.58	108.85	122.63
1.38	32	5.614	44	7.720	51.53	55.66	58.42	65.30	74.68	79.64	87.08	94.25	102.51	110.78	124.56
1.38	29	5.088	40	7.018	52.49	56.62	59.38	66.27	75.64	80.61	88.05	95.21	103.48	111.75	125.53
1.39	52	9.123	72	12.632	44.89	49.02	51.78	58.67	68.05	73.01	80.45	87.62	95.89	104.16	117.94
1.40	40	7.018	56	9.825	48.76	52.89	55.65	62.54	71.91	76.88	84.32	91.49	99.75	108.02	121.80
1.40	80	14.036	112	19.650	35.44	39.58	42.35	49.25	58.63	63.60	71.05	78.22	86.49	94.76	108.55
1.41	64	11.229	90	15.790	40.73	44.86	47.62	54.52	63.89	68.86	76.31	83.47	91.74	100.01	113.80
1.41	34	5.965	48	8.421	50.70	54.83	57.59	64.47	73.85	78.81	86.25	93.42	101.68	109.95	123.74
1.42	48	8.421	68	11.930	45.99	50.13	52.89	59.78	69.15	74.12	81.56	88.72	96.99	105.26	119.04
1.43	28	4.912	40	7.018	52.63	56.76	59.52	66.41	75.78	80.74	88.18	95.35	103.61	111.89	125.67
1.43	56	9.825	80	14.036	43.22	47.35	50.12	57.01	66.38	71.35	78.79	85.96	94.23	102.50	116.28
1.44	36	6.316	52	9.123	49.86	54.00	56.76	63.64	73.02	77.98	85.42	92.59	100.85	109.13	122.91
1.46	44	7.720	64	11.229	47.09	51.23	53.99	60.88	70.25	75.22	82.66	89.83	98.09	106.36	120.14
1.47	30	5.263	44	7.720	51.80	55.93	58.69	65.58	74.95	79.91	87.35	94.52	102.79	111.06	124.84
1.47	38	6.667	56	9.825	49.03	53.16	55.92	62.81	72.18	77.15	84.59	91.76	100.02	108.30	122.08
1.50	32	5.614	48	8.421	50.97	55.10	57.86	64.75	74.12	79.08	86.53	93.69	101.96	110.23	124.01
1.50	40	7.018	60	10.527	48.20	52.33	55.09	61.98	71.35	76.32	83.76	90.93	99.19	107.47	121.25
1.50	48	8.421	72	12.632	45.43	49.56	52.32	59.21	68.59	73.55	81.00	88.16	96.43	104.70	118.49
1.50	60	10.527	90	15.790	41.26	45.39	48.16	55.05	64.43	69.40	76.85	84.01	92.28	100.56	114.34
1.52	29	5.088	44	7.720	51.93	56.07	58.83	65.71	75.08	80.05	87.49	94.66	102.92	111.19	124.97
1.53	34	5.965	52	9.123	50.14	54.27	57.03	63.92	73.29	78.25	85.70	92.86	101.13	109.40	123.18
1.54	52	9.123	80	14.036	43.75	47.89	50.65	57.54	66.92	71.89	79.33	86.50	94.77	103.04	116.83
1.55	44	7.720	68	11.930	46.53	50.66	53.43	60.32	69.69	74.66	82.10	89.27	97.53	105.81	119.59
1.56	36	6.316	56	9.825	49.30	53.43	56.20	63.08	72.46	77.42	84.86	92.03	100.30	108.57	122.35
1.56	72	12.632	112	19.650	36.49	40.63	43.40	50.31	59.70	64.67	72.12	79.29	87.57	95.84	109.63
1.57	28	4.912	44	7.720	52.07	56.20	58.96	65.85	75.22	80.19	87.63	94.79	103.06	111.33	125.11
1.58	38	6.667	60	10.527	48.47	52.60	55.36	62.25	71.62	76.59	84.03	91.20	99.47	107.74	121.52
1.60	30	5.263	48	8.421	51.24	55.37	58.13	65.02	74.39	79.36	86.80	93.96	102.23	110.50	124.28
1.60	40	7.018	64	11.229	47.63	51.77	54.53	61.42	70.79	75.76	83.20	90.37	98.64	106.91	120.69
1.61	56	9.825	90	15.790	41.79	45.93	48.69	55.59	64.97	69.94	77.38	84.55	92.82	101.10	114.88
1.63	32	5.614	52	9.123	50.41	54.54	57.30	64.19	73.56	78.53	85.97	93.13	101.40	109.67	123.45
1.64	44	7.720	72	12.632	45.96	50.10	52.86	59.75	69.13	74.09	81.54	88.71	96.97	105.25	119.03
1.65	34	5.965	56	9.825	49.57	53.70	56.47	63.35	72.73	77.69	85.14	92.30	100.57	108.84	122.62
1.65	68	11.930	112	19.650	37.01	41.16	43.93	50.84	60.23	65.20	72.65	79.83	88.10	96.38	110.17
1.66	29	5.088	48	8.421	51.37	55.51	58.27	65.15	74.53	79.49	86.93	94.10	102.37	110.64	124.42
1.67	36	6.316	60	10.527	48.74	52.87	55.63	62.52	71.90	76.86	84.31	91.47	99.74	108.01	121.79
1.67	48	8.421	80	14.036	44.28	48.42	51.19	58.08	67.46	72.43	79.87	87.04	95.31	103.58	117.37
1.68	38	6.667	64	11.229	47.90	52.03	54.80	61.69	71.06	76.03	83.47	90.64	98.91	107.18	120.96
1.70	40	7.018	68	11.930	47.06	51.20	53.96	60.85	70.23	75.20	82.64	89.81	98.08	106.35	120.13
1.71	28	4.912	48	8.421	51.51	55.64	58.40	65.29	74.66	79.63	87.07	94.24	102.50	110.77	124.56
Length Factor*					1.05	1.10	1.10	1.10	1.10	1.10	1.10	1.10	1.10	1.10	1.10

Center distance is greater than eight times the Small Sprocket and the Large Sprocket is not flanged. Large Sprocket should be ordered with flanges as a special.

* This length correction factor must be used to determine the proper belt width.

V-Drives
FHP Drives
Drive Component Accessories
DYNA-SYNC
HT200/HTD Synchronous Drives
HT500 Synchronous Drives
Roller Chain Sprockets

SELECTION

14MM Pitch HT200 Belt Drive Selection Table

Speed Ratio	Sprocket Combinations				Center Distance, Inches										
	Driver		Driven												
	No. of Teeth	Pitch Dia. Inches	No. of Teeth	Pitch Dia. Inches	966-14M	1190-14M	1400-14M	1610-14M	1778-14M	1890-14M	2100-14M	2310-14M	2450-14M	2590-14M	2800-14M
Length Factor*					0.80	0.80	0.90	0.90	0.95	0.95	1.00	1.00	1.00	1.05	1.05
1.73	52	9.123	90	15.790	. . .	. . .	. . .	. . .	15.06	17.32	21.51	25.69	28.47	31.24	35.40
1.73	30	5.263	52	9.123	. . .	11.97	16.15	20.30	23.62	25.83	29.98	34.12	36.88	39.64	43.78
1.75	32	5.614	56	9.825	. . .	11.10	15.29	19.46	22.78	24.99	29.14	33.28	36.04	38.80	42.94
1.75	64	11.229	112	19.650	. . .	. . .	. . .	. . .	. . .	. . .	16.55	20.79	23.60	26.40	30.58
1.77	34	5.965	60	10.527	. . .	10.22	14.43	18.60	21.93	24.14	28.30	32.44	35.20	37.96	42.11
1.78	36	6.316	64	11.229	. . .	. . .	13.56	17.74	21.08	23.30	27.45	31.59	34.36	37.12	41.27
1.79	38	6.667	68	11.930	. . .	. . .	12.68	16.88	20.22	22.44	26.60	30.75	33.52	36.28	40.43
1.79	29	5.088	52	9.123	. . .	12.10	16.27	20.43	23.75	25.97	30.11	34.25	37.01	39.77	43.91
1.80	40	7.018	72	12.632	. . .	. . .	11.79	16.02	19.36	21.59	25.75	29.91	32.68	35.44	39.59
1.80	80	14.036	144	25.264	. . .	. . .	. . .	. . .	. . .	. . .	. . .	. . .	. . .	. . .	23.58
1.82	44	7.720	80	14.036	. . .	. . .	. . .	14.26	17.63	19.87	24.05	28.21	30.98	33.75	37.90
1.86	28	4.912	52	9.123	7.70	12.22	16.40	20.56	23.88	26.10	30.24	34.38	37.15	39.91	44.05
1.87	30	5.263	56	9.825	. . .	11.34	15.54	19.71	23.04	25.25	29.40	33.54	36.31	39.07	43.21
1.87	60	10.527	112	19.650	. . .	. . .	. . .	. . .	. . .	. . .	17.02	21.28	24.10	26.90	31.08
1.88	32	5.614	60	10.527	. . .	10.46	14.68	18.86	22.19	24.40	28.56	32.70	35.47	38.23	42.37
1.88	48	8.421	90	15.790	. . .	. . .	. . .	. . .	15.55	17.81	22.02	26.20	28.98	31.76	35.92
1.88	34	5.965	64	11.229	. . .	9.56	13.80	18.00	21.33	23.55	27.71	31.86	34.63	37.39	41.53
1.89	36	6.316	68	11.930	. . .	. . .	12.92	17.13	20.48	22.70	26.86	31.01	33.78	36.55	40.69
1.90	38	6.667	72	12.632	. . .	. . .	12.03	16.26	19.62	21.84	26.01	30.17	32.94	35.70	39.85
1.93	29	5.088	56	9.825	. . .	11.47	15.67	19.84	23.17	25.38	29.53	33.67	36.44	39.20	43.34
2.00	28	4.912	56	9.825	. . .	11.59	15.79	19.97	23.30	25.51	29.66	33.81	36.57	39.33	43.48
2.00	30	5.263	60	10.527	. . .	10.70	14.93	19.11	22.44	24.66	28.82	32.96	35.73	38.49	42.64
2.00	32	5.614	64	11.229	. . .	9.79	14.05	18.25	21.59	23.81	27.97	32.12	34.89	37.65	41.80
2.00	34	5.965	68	11.930	. . .	. . .	13.17	17.38	20.73	22.96	27.12	31.27	34.04	36.81	40.96
2.00	36	6.316	72	12.632	. . .	. . .	12.27	16.51	19.87	22.10	26.27	30.42	33.20	35.96	40.11
2.00	40	7.018	80	14.036	. . .	. . .	. . .	14.74	18.12	20.37	24.55	28.72	31.50	34.27	38.42
2.00	56	9.825	112	19.650	. . .	. . .	. . .	. . .	. . .	. . .	17.50	21.76	24.59	27.39	31.59
2.00	72	12.632	144	25.264	. . .	. . .	. . .	. . .	. . .	. . .	. . .	. . .	. . .	20.23	24.54
2.05	44	7.720	90	15.790	. . .	. . .	. . .	12.58	16.02	18.29	22.51	26.70	29.49	32.27	36.43
2.07	29	5.088	60	10.527	. . .	10.82	15.05	19.24	22.57	24.79	28.95	33.09	35.86	38.63	42.77
2.10	80	14.036	168	29.475	. . .	. . .	. . .	. . .	. . .	. . .	. . .	. . .	. . .	. . .	. . .
2.11	38	6.667	80	14.036	. . .	. . .	. . .	14.98	18.37	20.61	24.81	28.98	31.76	34.53	38.68
2.12	34	5.965	72	12.632	. . .	. . .	12.51	16.76	20.12	22.35	26.52	30.68	33.46	36.23	40.38
2.12	68	11.930	144	25.264	. . .	. . .	. . .	. . .	. . .	. . .	. . .	. . .	. . .	20.69	25.01
2.13	32	5.614	68	11.930	. . .	. . .	13.41	17.63	20.98	23.21	27.38	31.53	34.31	37.07	41.22
2.13	30	5.263	64	11.229	. . .	10.03	14.29	18.50	21.84	24.07	28.23	32.38	35.15	37.91	42.06
2.14	28	4.912	60	10.527	. . .	10.94	15.17	19.37	22.70	24.92	29.08	33.23	35.99	38.76	42.90
2.15	52	9.123	112	19.650	. . .	. . .	. . .	. . .	. . .	. . .	17.97	22.25	25.08	27.89	32.09
2.21	29	5.088	64	11.229	. . .	10.14	14.42	18.63	21.97	24.19	28.36	32.51	35.28	38.05	42.19
2.22	36	6.316	80	14.036	. . .	. . .	10.88	15.22	18.61	20.86	25.06	29.23	32.01	34.79	38.94
Length Factor*					0.80	0.80	0.90	0.90	0.95	0.95	1.00	1.00	1.00	1.05	1.05

Center distance is greater than eight times the Small Sprocket and the Large Sprocket is not flanged. Large Sprocket should be ordered with flanges as a special.

* This length correction factor must be used to determine the proper belt width.

14MM Pitch HT200 Belt Drive Selection Table

Speed Ratio	Sprocket Combinations: Driver No. of Teeth	Driver Pitch Dia. Inches	Driven No. of Teeth	Driven Pitch Dia. Inches	Center Distance, Inches: 3150-14M	3360-14M	3500-14M	3850-14M	4326-14M	4578-14M	4956-14M	5320-14M	5740-14M	6160-14M	6860-14M
Length Factor*					1.05	1.10	1.10	1.10	1.10	1.10	1.10	1.10	1.10	1.10	1.10
1.73	52	9.123	90	15.790	42.31	46.45	49.22	56.12	65.50	70.47	77.92	85.09	93.36	101.64	115.43
1.73	30	5.263	52	9.123	50.67	54.81	57.57	64.46	73.83	78.80	86.24	93.41	101.67	109.94	123.73
1.75	32	5.614	56	9.825	49.84	53.97	56.74	63.62	73.00	77.97	85.41	92.58	100.84	109.11	122.90
1.75	64	11.229	112	19.650	37.52	41.67	44.45	51.36	60.76	65.73	73.19	80.36	88.64	96.92	110.71
1.77	34	5.965	60	10.527	49.00	53.14	55.90	62.79	72.17	77.13	84.58	91.74	100.01	108.28	122.07
1.78	36	6.316	64	11.229	48.17	52.30	55.07	61.96	71.33	76.30	83.74	90.91	99.18	107.45	121.24
1.79	38	6.667	68	11.930	47.33	51.47	54.23	61.12	70.50	75.47	82.91	90.08	98.35	106.62	120.41
1.79	29	5.088	52	9.123	50.81	54.94	57.70	64.59	73.97	78.93	86.38	93.54	101.81	110.08	123.86
1.80	40	7.018	72	12.632	46.49	50.63	53.39	60.29	69.67	74.63	82.08	89.25	97.52	105.79	119.57
1.80	80	14.036	144	25.264	30.63	34.82	37.61	44.56	54.00	58.99	66.46	73.64	81.93	90.22	104.02
1.82	44	7.720	80	14.036	44.81	48.95	51.72	58.61	67.99	72.96	80.41	87.58	95.85	104.12	117.91
1.86	28	4.912	52	9.123	50.94	55.08	57.84	64.73	74.10	79.07	86.51	93.68	101.95	110.22	124.00
1.87	30	5.263	56	9.825	50.11	54.24	57.00	63.89	73.27	78.24	85.68	92.85	101.11	109.39	123.17
1.87	60	10.527	112	19.650	38.04	42.19	44.97	51.88	61.28	66.26	73.72	80.90	89.17	97.45	111.25
1.88	32	5.614	60	10.527	49.27	53.41	56.17	63.06	72.44	77.40	84.85	92.02	100.28	108.56	122.34
1.88	48	8.421	90	15.790	42.84	46.98	49.75	56.65	66.04	71.01	78.46	85.63	93.90	102.18	115.97
1.88	34	5.965	64	11.229	48.43	52.57	55.33	62.23	71.60	76.57	84.01	91.18	99.45	107.72	121.51
1.89	36	6.316	68	11.930	47.60	51.73	54.50	61.39	70.77	75.74	83.18	90.35	98.62	106.89	120.68
1.90	38	6.667	72	12.632	46.76	50.90	53.66	60.55	69.93	74.90	82.35	89.52	97.79	106.06	119.85
1.93	29	5.088	56	9.825	50.24	54.38	57.14	64.03	73.40	78.37	85.81	92.98	101.25	109.52	123.30
2.00	28	4.912	56	9.825	50.38	54.51	57.27	64.16	73.54	78.51	85.95	93.12	101.39	109.66	123.44
2.00	30	5.263	60	10.527	49.54	53.67	56.44	63.33	72.71	77.67	85.12	92.29	100.55	108.83	122.61
2.00	32	5.614	64	11.229	48.70	52.84	55.60	62.49	71.87	76.84	84.28	91.45	99.72	108.00	121.78
2.00	34	5.965	68	11.930	47.86	52.00	54.76	61.66	71.04	76.01	83.45	90.62	98.89	107.16	120.95
2.00	36	6.316	72	12.632	47.02	51.16	53.93	60.82	70.20	75.17	82.62	89.79	98.06	106.33	120.12
2.00	40	7.018	80	14.036	45.34	49.48	52.25	59.15	68.53	73.50	80.95	88.12	96.39	104.67	118.45
2.00	56	9.825	112	19.650	38.55	42.71	45.48	52.40	61.81	66.79	74.25	81.43	89.71	97.99	111.78
2.00	72	12.632	144	25.264	31.61	35.82	38.62	45.58	55.03	60.02	67.50	74.69	82.99	91.28	105.09
2.05	44	7.720	90	15.790	43.36	47.50	50.27	57.18	66.57	71.54	78.99	86.17	94.44	102.72	116.51
2.07	29	5.088	60	10.527	49.6C	53.81	56.57	63.46	72.84	77.81	85.25	92.42	100.69	108.96	122.75
2.10	80	14.036	168	29.475	26.71	31.00	33.84	40.88	50.39	55.41	62.91	70.13	78.44	86.74	100.57
2.11	38	6.667	80	14.036	45.60	49.74	52.51	59.41	68.80	73.77	81.22	88.39	96.66	104.94	118.72
2.12	34	5.965	72	12.632	47.29	51.43	54.19	61.09	70.47	75.44	82.89	90.06	98.33	106.60	120.39
2.12	68	11.930	144	25.264	32.10	36.31	39.12	46.09	55.54	60.54	68.02	75.22	83.51	91.81	105.62
2.13	32	5.614	68	11.930	48.13	52.27	55.03	61.93	71.31	76.28	83.72	90.89	99.16	107.43	121.22
2.13	30	5.263	64	11.229	48.97	53.10	55.87	62.76	72.14	77.11	84.55	91.72	99.99	108.27	122.05
2.14	28	4.912	60	10.527	49.81	53.94	56.70	63.60	72.98	77.94	85.39	92.56	100.83	109.10	122.88
2.15	52	9.123	112	19.650	39.06	43.22	46.00	52.92	62.33	67.32	74.78	81.96	90.24	98.52	112.32
2.21	29	5.088	64	11.229	49.10	53.24	56.00	62.89	72.27	77.24	84.69	91.86	100.13	108.40	122.19
2.22	36	6.316	80	14.036	45.86	50.01	52.77	59.68	69.06	74.03	81.48	88.66	96.93	105.20	118.99
Length Factor*					1.05	1.10	1.10	1.10	1.10	1.10	1.10	1.10	1.10	1.10	1.10

Center distance is greater than eight times the Small Sprocket and the Large Sprocket is not flanged.
Large Sprocket should be ordered with flanges as a special.

* This length correction factor must be used to determine the proper belt width.

V-Drives
FHP Drives
Drive Component Accessories
DYNA-SYNC
HT200/HTD Synchronous Drives
HT500 Synchronous Drives
Roller Chain Sprockets

SELECTION

14MM Pitch HT200 Belt Drive Selection Table

Speed Ratio	Sprocket Combinations				Center Distance, Inches										
	Driver		Driven												
	No. of Teeth	Pitch Dia. Inches	No. of Teeth	Pitch Dia. Inches	966-14M	1190-14M	1400-14M	1610-14M	1778-14M	1890-14M	2100-14M	2310-14M	2450-14M	2590-14M	2800-14M
Length Factor*					0.80	0.80	0.90	0.90	0.95	0.95	1.00	1.00	1.00	1.05	1.05
2.25	32	5.614	72	12.632	. . .	. . .	12.74	17.00	20.37	22.60	26.78	30.94	33.72	36.49	40.64
2.25	40	7.018	90	15.790	. . .	. . .	. . .	13.04	16.50	18.78	23.01	27.20	30.00	32.78	36.95
2.25	64	11.229	144	25.264	. . .	. . .	. . .	. . .	. . .	. . .	. . .	. . .	. . .	21.15	25.49
2.27	30	5.263	68	11.930	. . .	9.32	13.65	17.88	21.23	23.46	27.64	31.79	34.57	37.33	41.48
2.29	28	4.912	64	11.229	. . .	10.26	14.54	18.75	22.10	24.32	28.49	32.64	35.41	38.18	42.32
2.33	48	8.421	112	19.650	. . .	. . .	. . .	. . .	. . .	. . .	18.43	22.73	25.56	28.38	32.59
2.33	72	12.632	168	29.475	. . .	. . .	. . .	. . .	. . .	. . .	. . .	. . .	. . .	. . .	. . .
2.35	29	5.088	68	11.930	. . .	9.43	13.77	18.00	21.36	23.59	27.76	31.92	34.70	37.46	41.61
2.35	34	5.965	80	14.036	. . .	. . .	11.11	15.46	18.86	21.11	25.31	29.48	32.27	35.04	39.20
2.37	38	6.667	90	15.790	. . .	. . .	. . .	13.27	16.74	19.02	23.25	27.45	30.25	33.03	37.20
2.40	30	5.263	72	12.632	. . .	. . .	12.98	17.25	20.62	22.85	27.03	31.20	33.98	36.75	40.90
2.40	60	10.527	144	25.264	. . .	. . .	. . .	. . .	. . .	. . .	. . .	. . .	18.64	21.61	25.96
2.40	80	14.036	192	33.686	. . .	. . .	. . .	. . .	. . .	. . .	. . .	. . .	. . .	. . .	. . .
2.43	28	4.912	68	11.930	. . .	9.54	13.89	18.13	21.49	23.72	27.89	32.05	34.83	37.59	41.74
2.47	68	11.930	168	29.475	. . .	. . .	. . .	. . .							
2.48	29	5.088	72	12.632	. . .	. . .	13.10	17.37	20.74	22.98	27.16	31.33	34.10	36.87	41.03
2.50	32	5.614	80	14.036	. . .	. . .	11.34	15.69	19.10	21.36	25.56	29.74	32.52	35.30	39.46
2.50	36	6.316	90	15.790	. . .	. . .	. . .	13.49	16.97	19.26	23.50	27.70	30.50	33.29	37.46
2.55	44	7.720	112	19.650	. . .	. . .	. . .	. . .	. . .	14.46	18.89	23.20	26.05	28.87	33.08
2.57	28	4.912	72	12.632	. . .	. . .	13.21	17.49	20.86	23.10	27.29	31.45	34.23	37.00	41.16
2.57	56	9.825	144	25.264	. . .	. . .	. . .	. . .	. . .	. . .	. . .	. . .	19.09	22.06	26.43
2.63	64	11.229	168	29.475	. . .	. . .	. . .	. . .	. . .	. . .	. . .	. . .	. . .	. . .	21.15
2.65	34	5.965	90	15.790	. . .	. . .	. . .	13.72	17.21	19.50	23.74	27.95	30.75	33.54	37.71
2.67	30	5.263	80	14.036	. . .	. . .	11.56	15.93	19.34	21.60	25.81	29.99	32.78	35.56	39.72
2.67	72	12.632	192	33.686	. . .	. . .	. . .	. . .	. . .	. . .	. . .	. . .	. . .	. . .	. . .
2.70	80	14.036	216	37.896	. . .	. . .	. . .	. . .	. . .	. . .	. . .	. . .	. . .	. . .	. . .
2.76	29	5.088	80	14.036	. . .	. . .	11.67	16.05	19.46	21.72	25.93	30.12	32.91	35.68	39.85
2.77	52	9.123	144	25.264	. . .	. . .	. . .	. . .	. . .	. . .	. . .	. . .	19.53	22.51	26.89
2.80	40	7.018	112	19.650	. . .	. . .	. . .	. . .	. . .	14.90	19.36	23.68	26.53	29.36	33.58
2.80	60	10.527	168	29.475	. . .	. . .	. . .	. . .	. . .	. . .	. . .	. . .	. . .	. . .	21.59
2.81	32	5.614	90	15.790	. . .	. . .	. . .	13.95	17.44	19.73	23.99	28.20	31.00	33.79	37.97
2.82	68	11.930	192	33.686	. . .	. . .	. . .	. . .	. . .	. . .	. . .	. . .	. . .	. . .	. . .
2.86	28	4.912	80	14.036	. . .	. . .	11.78	16.17	19.58	21.85	26.06	30.24	33.03	35.81	39.98
2.95	38	6.667	112	19.650	. . .	. . .	. . .	. . .	. . .	15.12	19.58	23.91	26.77	29.60	33.83
3.00	30	5.263	90	15.790	. . .	. . .	. . .	14.17	17.68	19.97	24.23	28.45	31.25	34.04	38.22
3.00	48	8.421	144	25.264	. . .	. . .	. . .	. . .	. . .	. . .	. . .	. . .	19.97	22.97	27.36
3.00	56	9.825	168	29.475	. . .	. . .	. . .	. . .	. . .	. . .	. . .	. . .	. . .	. . .	22.02
3.00	64	11.229	192	33.686	. . .	. . .	. . .	. . .	. . .	. . .	. . .	. . .	. . .	. . .	. . .
3.00	72	12.632	216	37.896	. . .	. . .	. . .	. . .	. . .	. . .	. . .	. . .	. . .	. . .	. . .
3.10	29	5.088	90	15.790	. . .	. . .	. . .	14.28	17.79	20.09	24.35	28.57	31.38	34.17	38.35
3.11	36	6.316	112	19.650	. . .	. . .	. . .	. . .	. . .	15.34	19.81	24.15	27.01	29.84	34.07
3.20	60	10.527	192	33.686	. . .	. . .	. . .	. . .	. . .	. . .	. . .	. . .	. . .	. . .	. . .
Length Factor*					0.80	0.80	0.90	0.90	0.95	0.95	1.00	1.00	1.00	1.05	1.05

Center distance is greater than eight times the Small Sprocket and the Large Sprocket is not flanged. Large Sprocket should be ordered with flanges as a special.

* This length correction factor must be used to determine the proper belt width.

14MM Pitch HT200 Belt Drive Selection Table

Speed Ratio	Sprocket Combinations: Driver No. of Teeth	Driver Pitch Dia. Inches	Driven No. of Teeth	Driven Pitch Dia. Inches	Center Distance, Inches: 3150-14M	3360-14M	3500-14M	3850-14M	4326-14M	4578-14M	4956-14M	5320-14M	5740-14M	6160-14M	6860-14M
Length Factor*					**1.05**	**1.10**	**1.10**	**1.10**	**1.10**	**1.10**	**1.10**	**1.10**	**1.10**	**1.10**	**1.10**
2.25	32	5.614	72	12.632	47.55	51.69	54.46	61.35	70.74	75.71	83.16	90.33	98.60	106.87	120.66
2.25	40	7.018	90	15.790	43.88	48.03	50.80	57.70	67.10	72.07	79.53	86.70	94.98	103.25	117.04
2.25	64	11.229	144	25.264	32.59	36.81	39.62	46.59	56.05	61.05	68.54	75.74	84.04	92.33	106.15
2.27	30	5.263	68	11.930	48.39	52.53	55.30	62.19	71.57	76.54	83.99	91.16	99.43	107.71	121.49
2.29	28	4.912	64	11.229	49.23	53.37	56.13	63.03	72.41	77.38	84.82	91.99	100.26	108.54	122.32
2.33	48	8.421	112	19.650	39.56	43.73	46.51	53.44	62.86	67.84	75.30	82.49	90.77	99.05	112.85
2.33	72	12.632	168	29.475	27.65	31.95	34.81	41.86	51.39	56.42	63.93	71.16	79.47	87.78	101.62
2.35	29	5.088	68	11.930	48.52	52.66	55.43	62.33	71.71	76.68	84.12	91.29	99.57	107.84	121.63
2.35	34	5.965	80	14.036	46.12	50.27	53.04	59.94	69.33	74.30	81.75	88.92	97.20	105.47	119.26
2.37	38	6.667	90	15.790	44.14	48.29	51.06	57.97	67.36	72.34	79.79	86.97	95.24	103.52	117.31
2.40	30	5.263	72	12.632	47.81	51.95	54.72	61.62	71.00	75.98	83.42	90.60	98.87	107.14	120.93
2.40	60	10.527	144	25.264	33.08	37.30	40.11	47.10	56.56	61.57	69.06	76.26	84.56	92.86	106.68
2.40	80	14.036	192	33.686	- - -	26.89	29.82	37.02	46.66	51.72	59.28	66.54	74.89	83.22	97.08
2.43	28	4.912	68	11.930	48.66	52.80	55.56	62.46	71.84	76.81	84.26	91.43	99.70	107.98	121.76
2.47	68	11.930	168	29.475	28.11	32.43	35.28	42.35	51.89	56.92	64.44	71.67	79.99	88.30	102.14
2.48	29	5.088	72	12.632	47.94	52.09	54.85	61.75	71.14	76.11	83.56	90.73	99.00	107.28	121.06
2.50	32	5.614	80	14.036	46.39	50.53	53.30	60.20	69.59	74.57	82.02	89.19	97.47	105.74	119.53
2.50	36	6.316	90	15.790	44.40	48.55	51.32	58.23	67.63	72.60	80.06	87.23	95.51	103.79	117.58
2.55	44	7.720	112	19.650	40.07	44.24	47.02	53.96	63.38	68.36	75.83	83.01	91.30	99.58	113.39
2.57	28	4.912	72	12.632	48.08	52.22	54.99	61.89	71.27	76.24	83.69	90.86	99.14	107.41	121.20
2.57	56	9.825	144	25.264	33.56	37.79	40.61	47.60	57.07	62.08	69.57	76.78	85.08	93.38	107.20
2.63	64	11.229	168	29.475	28.57	32.90	35.76	42.84	52.39	57.42	64.95	72.18	80.50	88.82	102.67
2.65	34	5.965	90	15.790	44.65	48.81	51.58	58.49	67.89	72.87	80.32	87.50	95.78	104.06	117.85
2.67	30	5.263	80	14.036	46.65	50.79	53.56	60.47	69.86	74.83	82.29	89.46	97.73	106.01	119.80
2.67	72	12.632	192	33.686	- - -	27.79	30.74	37.97	47.63	52.71	60.28	67.54	75.90	84.24	98.12
2.70	80	14.036	216	37.896	- - -	22.16	25.32	32.85	42.73	47.86	55.51	62.82	72.23	79.60	93.51
2.76	29	5.088	80	14.036	46.78	50.92	53.69	60.60	69.99	74.97	82.42	89.59	97.87	106.15	119.94
2.77	52	9.123	144	25.264	34.04	38.28	41.10	48.10	57.58	62.59	70.09	77.30	85.60	93.91	107.73
2.80	40	7.018	112	19.650	40.57	44.75	47.53	54.47	63.90	68.89	76.35	83.54	91.83	100.12	113.92
2.80	60	10.527	168	29.475	29.03	33.37	36.24	43.33	52.89	57.93	65.46	72.69	81.02	89.34	103.19
2.81	32	5.614	90	15.790	44.91	49.07	51.84	58.75	68.15	73.13	80.59	87.77	96.04	104.33	118.12
2.82	68	11.930	192	33.686	23.63	28.19	31.15	38.41	48.09	53.18	60.76	68.03	76.39	84.73	98.61
2.86	28	4.912	80	14.036	46.91	51.05	53.82	60.73	70.12	75.10	82.55	89.73	98.00	106.28	120.07
2.95	38	6.667	112	19.650	40.82	45.00	47.79	54.73	64.16	69.15	76.62	83.80	92.09	100.38	114.19
3.00	30	5.263	90	15.790	45.17	49.32	52.10	59.02	68.42	73.40	80.85	88.03	96.31	104.59	118.39
3.00	48	8.421	144	25.264	34.52	38.77	41.59	48.60	58.09	63.10	70.60	77.81	86.12	94.43	108.26
3.00	56	9.825	168	29.475	29.49	33.84	36.71	43.81	53.38	58.43	65.96	73.20	81.53	89.86	103.71
3.00	64	11.229	192	33.686	24.14	28.69	31.65	38.91	48.60	53.69	61.27	68.55	76.91	85.26	99.15
3.00	72	12.632	216	37.896	- - -	23.01	26.19	33.76	43.67	48.82	56.48	63.81	72.22	80.61	94.53
3.10	29	5.088	90	15.790	45.30	49.45	52.23	59.15	68.55	73.53	80.99	88.17	96.44	104.73	118.52
3.11	36	6.316	112	19.650	41.07	45.25	48.04	54.99	64.42	69.41	76.88	84.07	92.36	100.65	114.45
3.20	60	10.527	192	33.686	24.49	29.08	32.06	39.34	49.06	54.15	61.75	69.03	77.40	85.75	99.64
Length Factor*					**1.05**	**1.10**	**1.10**	**1.10**	**1.10**	**1.10**	**1.10**	**1.10**	**1.10**	**1.10**	**1.10**

Center distance is greater than eight times the Small Sprocket and the Large Sprocket is not flanged. Large Sprocket should be ordered with flanges as a special.

* This length correction factor must be used to determine the proper belt width.

V-Drives
FHP Drives
Drive Component Accessories
DYNA-SYNC
HT200/HTD Synchronous Drives
HT500 Synchronous Drives
Roller Chain Sprockets

SELECTION

14MM Pitch HT200 Belt Drive Selection Table

Speed Ratio	Sprocket Combinations				Center Distance, Inches										
	Driver		Driven												
	No. Of Teeth	Pitch Dia. Inches	No. Of Teeth	Pitch Dia. Inches	966-14M	1190-14M	1400-14M	1610-14M	1778-14M	1890-14M	2100-14M	2310-14M	2450-14M	2590-14M	2800-14M
Length Factor*					0.80	0.80	0.90	0.90	0.95	0.95	1.00	1.00	1.00	1.05	1.05
3.21	28	4.912	90	15.790	. . .	. . .	. . .	14.40	17.91	20.21	24.47	28.69	31.50	34.29	38.48
3.23	52	9.123	168	29.475	. . .	. . .	. . .	. . .	. . .	. . .	. . .	. . .	. . .	. . .	22.46
3.27	44	7.720	144	25.264	. . .	. . .	. . .	. . .	. . .	. . .	. . .	17.29	20.41	23.42	27.82
3.29	34	5.965	112	19.650	. . .	. . .	. . .	. . .	. . .	15.56	20.04	24.39	27.25	30.09	34.32
3.38	64	11.229	216	37.896	. . .	. . .	. . .	. . .	. . .	. . .	. . .	. . .	. . .	. . .	. . .
3.43	56	9.825	192	33.686	. . .	. . .	. . .	. . .	. . .	. . .	. . .	. . .	. . .	. . .	. . .
3.50	32	5.614	112	19.650	. . .	. . .	. . .	. . .	13.25	15.77	20.27	24.62	27.49	30.33	34.56
3.50	48	8.421	168	29.475	. . .	. . .	. . .	. . .	. . .	. . .	. . .	. . .	. . .	. . .	22.89
3.60	40	7.018	144	25.264	. . .	. . .	. . .	. . .	. . .	. . .	. . .	17.71	20.85	23.86	28.28
3.69	52	9.123	192	33.686	. . .	. . .	. . .	. . .	. . .	. . .	. . .	. . .	. . .	. . .	. . .
3.73	30	5.263	112	19.650	. . .	. . .	. . .	. . .	13.46	15.99	20.50	24.85	27.72	30.57	34.81
3.79	38	6.667	144	25.264	. . .	. . .	. . .	. . .	. . .	. . .	. . .	17.92	21.06	24.09	28.51
3.82	44	7.720	168	29.475	. . .	. . .	. . .	. . .	. . .	. . .	. . .	. . .	. . .	. . .	23.32
3.86	29	5.088	112	19.650	. . .	. . .	. . .	. . .	13.57	16.10	20.61	24.97	27.84	30.69	34.93
3.86	56	9.825	216	37.896	. . .	. . .	. . .	. . .	. . .	. . .	. . .	. . .	. . .	. . .	. . .
4.00	28	4.912	112	19.650	. . .	. . .	. . .	. . .	13.67	16.21	20.72	25.09	27.96	30.81	35.05
4.00	36	6.316	144	25.264	. . .	. . .	. . .	. . .	. . .	. . .	. . .	18.13	21.28	24.31	28.74
4.00	48	8.421	192	33.686	. . .	. . .	. . .	. . .	. . .	. . .	. . .	. . .	. . .	. . .	. . .
4.20	40	7.018	168	29.475	. . .	. . .	. . .	. . .	. . .	. . .	. . .	. . .	. . .	18.87	23.75
4.24	34	5.965	144	25.264	. . .	. . .	. . .	. . .	. . .	. . .	. . .	18.34	21.50	24.53	28.97
4.36	44	7.720	192	33.686	. . .	. . .	. . .	. . .	. . .	. . .	. . .	. . .	. . .	. . .	. . .
4.42	38	6.667	168	29.475	. . .	. . .	. . .	. . .	. . .	. . .	. . .	. . .	. . .	19.08	23.97
4.50	32	5.614	144	25.264	. . .	. . .	. . .	. . .	. . .	. . .	. . .	18.55	21.72	24.76	29.20
4.50	48	8.421	216	37.896	. . .	. . .	. . .	. . .	. . .	. . .	. . .	. . .	. . .	. . .	. . .
4.67	36	6.316	168	29.475	. . .	. . .	. . .	. . .	. . .	. . .	. . .	. . .	. . .	19.28	24.18
4.80	30	5.263	144	25.264	. . .	. . .	. . .	. . .	. . .	. . .	. . .	18.76	21.93	24.98	29.43
4.80	40	7.018	192	33.686	. . .	. . .	. . .	. . .	. . .	. . .	. . .	. . .	. . .	. . .	. . .
4.91	44	7.720	216	37.896	. . .	. . .	. . .	. . .	. . .	. . .	. . .	. . .	. . .	. . .	. . .
4.94	34	5.965	168	29.475	. . .	. . .	. . .	. . .	. . .	. . .	. . .	. . .	. . .	19.48	24.39
4.97	29	5.088	144	25.264	. . .	. . .	. . .	. . .	. . .	. . .	. . .	18.86	22.04	25.09	29.54
5.05	38	6.667	192	33.686	. . .	. . .	. . .	. . .	. . .	. . .	. . .	. . .	. . .	. . .	. . .
5.14	28	4.912	144	25.264	. . .	. . .	. . .	. . .	. . .	. . .	. . .	18.97	22.15	25.20	29.66
5.25	32	5.614	168	29.475	. . .	. . .	. . .	. . .	. . .	. . .	. . .	. . .	. . .	19.69	24.61
5.33	36	6.316	192	33.686	. . .	. . .	. . .	. . .	. . .	. . .	. . .	. . .	. . .	. . .	. . .
5.40	40	7.018	216	37.896	. . .	. . .	. . .	. . .	. . .	. . .	. . .	. . .	. . .	. . .	. . .
5.60	30	5.263	168	29.475	. . .	. . .	. . .	. . .	. . .	. . .	. . .	. . .	. . .	19.89	24.82
5.65	34	5.965	192	33.686	. . .	. . .	. . .	. . .	. . .	. . .	. . .	. . .	. . .	. . .	. . .
5.65	38	6.667	216	37.896	. . .	. . .	. . .	. . .	. . .	. . .	. . .	. . .	. . .	. . .	. . .
5.79	29	5.088	168	29.475	. . .	. . .	. . .	. . .	. . .	. . .	. . .	. . .	. . .	19.99	24.93
6.00	28	4.912	168	29.475	. . .	. . .	. . .	. . .	. . .	. . .	. . .	. . .	. . .	20.09	25.03
6.00	32	5.614	192	33.686	. . .	. . .	. . .	. . .	. . .	. . .	. . .	. . .	. . .	. . .	. . .
6.00	36	6.316	216	37.896	. . .	. . .	. . .	. . .	. . .	. . .	. . .	. . .	. . .	. . .	. . .
6.35	34	5.965	216	37.896	. . .	. . .	. . .	. . .	. . .	. . .	. . .	. . .	. . .	. . .	. . .
6.40	30	5.263	192	33.686	. . .	. . .	. . .	. . .	. . .	. . .	. . .	. . .	. . .	. . .	. . .
6.62	29	5.088	192	33.686	. . .	. . .	. . .	. . .	. . .	. . .	. . .	. . .	. . .	. . .	. . .
6.75	32	5.614	216	37.896	. . .	. . .	. . .	. . .	. . .	. . .	. . .	. . .	. . .	. . .	. . .
6.86	28	4.912	192	33.686	. . .	. . .	. . .	. . .	. . .	. . .	. . .	. . .	. . .	. . .	
Length Factor*					0.80	0.80	0.90	0.90	0.95	0.95	1.00	1.00	1.00	1.05	1.05

Center distance is greater than eight times the Small Sprocket and the Large Sprocket is not flanged. Large Sprocket should be ordered with flanges as a special.

* This length correction factor must be used to determine the proper belt width.

FEATURES/BENEFITS PAGE PT11-2 | SPECIFICATIONS PAGE PT11-4 | ENGINEERING/TECHNICAL PAGE PT11-64

14MM Pitch HT200 Belt Drive Selection Table

Speed Ratio	Sprocket Combinations: Driver No. of Teeth	Driver Pitch Dia. Inches	Driven No. of Teeth	Driven Pitch Dia. Inches	Center Distance, Inches: 3150-14M	3360-14M	3500-14M	3850-14M	4326-14M	4578-14M	4956-14M	5320-14M	5740-14M	6160-14M	6860-14M
Length Factor*					1.05	1.10	1.10	1.10	1.10	1.10	1.10	1.10	1.10	1.10	1.10
3.21	28	4.912	90	15.790	45.42	49.58	52.36	59.28	68.68	73.66	81.12	88.30	96.58	104.86	118.66
3.23	52	9.123	168	29.475	29.95	34.30	37.18	44.30	53.88	58.92	66.46	73.71	82.04	90.37	104.23
3.27	44	7.720	144	25.264	35.00	39.25	42.08	49.09	58.59	63.61	71.11	78.33	86.64	94.95	108.78
3.29	34	5.965	112	19.650	41.32	45.51	48.30	55.24	64.67	69.67	77.14	84.33	92.62	100.91	114.72
3.38	64	11.229	216	37.896	- - -	23.85	27.05	34.66	44.60	49.77	57.45	64.79	73.21	81.61	95.55
3.43	56	9.825	192	33.686	25.01	29.58	32.56	39.85	49.57	54.66	62.26	69.55	77.92	86.28	100.17
3.50	32	5.614	112	19.650	41.57	45.76	48.55	55.50	64.93	69.93	77.40	84.59	92.88	101.17	114.98
3.50	48	8.421	168	29.475	30.41	34.77	37.66	44.78	54.37	59.42	66.97	74.21	82.55	90.89	104.75
3.60	40	7.018	144	25.264	35.48	39.73	42.56	49.59	59.10	64.12	71.62	78.84	87.16	95.47	109.30
3.69	52	9.123	192	33.686	25.35	29.96	32.96	40.28	50.02	55.12	62.73	70.02	78.40	86.77	100.67
3.73	30	5.263	112	19.650	41.82	46.01	48.80	55.75	65.19	70.18	77.66	84.85	93.15	101.44	115.25
3.79	38	6.667	144	25.264	35.71	39.98	42.81	49.84	59.35	64.37	71.88	79.10	87.42	95.73	109.57
3.82	44	7.720	168	29.475	30.86	35.23	38.12	45.26	54.86	59.92	67.47	74.72	83.06	91.40	105.26
3.86	29	5.088	112	19.650	41.95	46.14	48.93	55.88	65.32	70.31	77.79	84.98	93.28	101.57	115.38
3.86	56	9.825	216	37.896	- - -	24.69	27.91	35.56	45.53	50.71	58.41	65.77	74.20	82.61	96.56
4.00	28	4.912	112	19.650	42.07	46.26	49.05	56.01	65.45	70.44	77.92	85.11	93.41	101.70	115.51
4.00	36	6.316	144	25.264	35.95	40.22	43.05	50.08	59.60	64.62	72.13	79.36	87.67	95.99	109.83
4.00	48	8.421	192	33.686	25.87	30.47	33.46	40.78	50.52	55.63	63.24	70.54	78.93	87.29	101.20
4.20	40	7.018	168	29.475	31.31	35.70	38.59	45.74	55.35	60.41	67.97	75.22	83.57	91.91	105.78
4.24	34	5.965	144	25.264	36.19	40.46	43.29	50.33	59.85	64.87	72.39	79.61	87.93	96.25	110.09
4.36	44	7.720	192	33.686	26.30	30.91	33.91	41.24	51.00	56.11	63.73	71.03	79.43	87.80	101.71
4.42	38	6.667	168	29.475	31.54	35.93	38.83	45.98	55.60	60.66	68.22	75.48	83.83	92.17	106.04
4.50	32	5.614	144	25.264	36.43	40.70	43.54	50.58	60.10	65.13	72.64	79.87	88.19	96.51	110.35
4.50	48	8.421	216	37.896	- - -	25.53	28.76	36.45	46.46	51.66	59.37	66.74	75.19	83.60	97.57
4.67	36	6.316	168	29.475	31.76	36.16	39.06	46.22	55.84	60.91	68.47	75.73	84.08	92.42	106.30
4.80	30	5.263	144	25.264	36.66	40.94	43.78	50.82	60.35	65.38	72.90	80.12	88.45	96.77	110.61
4.80	40	7.018	192	33.686	26.73	31.35	34.36	41.70	51.48	56.60	64.22	71.53	79.93	88.30	102.22
4.91	44	7.720	216	37.896	- - -	25.95	29.19	36.89	46.92	52.13	59.85	67.22	75.68	84.10	98.07
4.94	34	5.965	168	29.475	31.99	36.39	39.29	46.46	56.08	61.15	68.72	75.98	84.33	92.68	106.56
4.97	29	5.088	144	25.264	36.78	41.06	43.90	50.94	60.47	65.50	73.02	80.25	88.58	96.90	110.74
5.05	38	6.667	192	33.686	26.94	31.57	34.58	41.93	51.72	56.84	64.47	71.78	80.18	88.55	102.47
5.14	28	4.912	144	25.264	36.90	41.18	44.02	51.07	60.60	65.63	73.15	80.38	88.71	97.03	110.87
5.25	32	5.614	168	29.475	32.22	36.62	39.53	46.69	56.33	61.40	68.97	76.23	84.59	92.93	106.81
5.33	36	6.316	192	33.686	27.16	31.80	34.81	42.17	51.95	57.08	64.71	72.02	80.43	88.80	102.73
5.40	40	7.018	216	37.896	- - -	26.36	29.62	37.34	47.38	52.59	60.33	67.71	76.17	84.59	98.57
5.60	30	5.263	168	29.475	32.44	36.85	39.76	46.93	56.57	61.64	69.22	76.48	84.84	93.19	107.07
5.65	34	5.965	192	33.686	27.26	31.94	34.97	42.35	52.16	57.29	64.93	72.25	80.65	89.04	102.96
5.65	38	6.667	216	37.896	- - -	26.57	29.83	37.56	47.61	52.83	60.56	67.95	76.41	84.84	98.82
5.79	29	5.088	168	29.475	32.55	36.96	39.87	47.05	56.69	61.77	69.34	76.61	84.97	93.32	107.20
6.00	28	4.912	168	29.475	32.67	37.08	39.99	47.17	56.81	61.89	69.46	76.73	85.09	93.44	107.33
6.00	32	5.614	192	33.686	27.59	32.24	35.25	42.63	52.43	57.56	65.20	72.52	80.92	89.31	103.23
6.00	36	6.316	216	37.896	- - -	26.78	30.04	37.78	47.85	53.06	60.80	68.19	76.66	85.09	99.07
6.35	34	5.965	216	37.896	- - -	26.99	30.25	38.00	48.08	53.30	61.04	68.43	76.90	85.33	99.32
6.40	30	5.263	192	33.686	27.80	32.46	35.48	42.86	52.67	57.80	65.44	72.76	81.17	89.56	103.49
6.62	29	5.088	192	33.686	27.79	32.49	35.53	42.93	52.75	57.89	65.54	72.86	81.28	89.66	103.60
6.75	32	5.614	216	37.896	- - -	27.20	30.47	38.22	48.30	53.53	61.28	68.67	77.15	85.58	99.58
6.86	28	4.912	192	33.686	28.01	32.67	35.70	43.09	52.90	58.04	65.68	73.01	81.42	89.81	103.74
Length Factor*					1.05	1.10	1.10	1.10	1.10	1.10	1.10	1.10	1.10	1.10	1.10

Center distance is greater than eight times the Small Sprocket and the Large Sprocket is not flanged. Large Sprocket should be ordered with flanges as a special.

* This length correction factor must be used to determine the proper belt width.

FEATURES/BENEFITS PAGE PT11-2
SPECIFICATIONS PAGE PT11-4
ENGINEERING/TECHNICAL PAGE PT11-64

SELECTION

20MM Ratio/Center Distance Tables

Drive Ratio	Sprocket Combination				Nominal Center Distance										
	Driver		Driven		Belt Length Code Designation										
	No. Of Teeth	Pitch Dia.	No. Of Teeth	Pitch Dia.	2000	2500	3400	3800	4200	4600	5000	5400	5800	6200	6600
Belt Length Factor —>					0.8	0.9	0.95		1.0		1.05			1.1	
1.00	34	8.522	34	8.522	26.0	35.8	53.6	61.4	69.3	77.2	85.0	92.9	100.8	108.7	116.5
1.00	36	9.023	36	9.023	25.2	35.0	52.8	60.6	68.5	76.4	84.3	92.1	100.0	107.9	115.8
1.00	38	9.524	38	9.524	24.4	34.3	52.0	59.9	67.7	75.6	83.5	91.3	99.2	107.1	115.0
1.00	40	10.026	40	10.026	23.6	33.5	51.2	59.1	66.9	74.8	82.7	90.6	98.4	106.3	114.2
1.00	44	11.028	44	11.028	22.1	31.9	49.6	57.5	65.4	73.2	81.1	89.0	96.9	104.7	112.6
1.00	48	12.031	48	12.031	20.5	30.3	48.0	55.9	63.8	71.7	79.5	87.4	95.3	103.2	111.0
1.00	52	13.033	52	13.033	18.9	28.8	46.5	54.3	62.2	70.1	78.0	85.8	93.7	101.6	109.5
1.00	56	14.036	56	14.036	17.3	27.2	44.9	52.8	60.6	68.5	76.4	84.3	92.1	100.0	107.9
1.00	60	15.038	60	15.038	. . .	25.6	43.3	51.2	59.1	66.9	74.8	82.7	90.6	98.4	106.3
1.00	64	16.041	64	16.041	. . .	24.0	41.7	49.6	57.5	65.4	73.2	81.1	89.0	96.9	104.7
1.00	68	17.043	68	17.043	. . .	22.5	40.2	48.0	55.9	63.8	71.7	79.5	87.4	95.3	103.2
1.00	72	18.046	72	18.046	. . .	20.9	38.6	46.5	54.3	62.2	70.1	78.0	85.8	93.7	101.6
1.00	80	20.051	80	20.051	. . .	. . .	35.4	43.3	51.2	59.1	66.9	74.8	82.7	90.6	98.4
1.00	90	22.557	90	22.557	. . .	. . .	31.5	39.4	47.3	55.1	63.0	70.9	78.8	86.6	94.5
1.05	38	9.524	40	10.026	24.0	33.9	51.6	59.5	67.3	75.2	83.1	91.0	98.8	106.7	114.6
1.06	36	9.023	38	9.524	24.8	34.7	52.4	60.2	68.1	76.0	83.9	91.7	99.6	107.5	115.4
1.06	34	8.522	36	9.023	25.6	35.4	53.2	61.0	68.9	76.8	84.7	92.5	100.4	108.3	116.1
1.06	68	17.043	72	18.046	. . .	21.7	39.4	47.3	55.1	63.0	70.9	78.8	86.6	94.5	102.4
1.06	64	16.041	68	17.043	. . .	23.2	41.0	48.8	56.7	64.6	72.5	80.3	88.2	96.1	103.9
1.07	60	15.038	64	16.041	. . .	24.8	42.5	50.4	58.3	66.2	74.0	81.9	89.8	97.6	105.5
1.07	56	14.036	60	15.038	16.5	26.4	44.1	52.0	59.9	67.7	75.6	83.5	91.3	99.2	107.1
1.08	52	13.033	56	14.036	18.1	28.0	45.7	53.6	61.4	69.3	77.2	85.0	92.9	100.8	108.7
1.08	48	12.031	52	13.033	19.7	29.5	47.3	55.1	63.0	70.9	78.7	86.6	94.5	102.4	110.2
1.09	44	11.028	48	12.031	21.3	31.1	48.8	56.7	64.6	72.4	80.3	88.2	96.1	103.9	111.8
1.10	40	10.026	44	11.028	22.8	32.7	50.4	58.3	66.1	74.0	81.9	89.8	97.6	105.5	113.4
1.11	36	9.023	40	10.026	24.4	34.3	52.0	59.8	67.7	75.6	83.5	91.3	99.2	107.1	115.0
1.11	72	18.046	80	20.051	. . .	. . .	37.0	44.9	52.8	60.6	68.5	76.4	84.3	92.1	100.0
1.12	34	8.522	38	9.524	25.2	35.0	52.8	60.6	68.5	76.4	84.3	92.1	100.0	107.9	115.8
1.13	64	16.041	72	18.046	. . .	22.4	40.2	48.0	55.9	63.8	71.7	79.5	87.4	95.3	103.2
1.13	80	20.051	90	22.557	. . .	. . .	33.5	41.3	49.2	57.1	65.0	72.8	80.7	88.6	96.5
1.13	60	15.038	68	17.043	. . .	24.0	41.7	49.6	57.5	65.4	73.2	81.1	89.0	96.9	104.7
1.14	56	14.036	64	16.041	. . .	25.6	43.3	51.2	59.1	66.9	74.8	82.7	90.6	98.4	106.3
1.15	52	13.033	60	15.038	17.3	27.2	44.9	52.8	60.6	68.5	76.4	84.3	92.1	100.0	107.9
1.16	38	9.524	44	11.028	23.2	33.1	50.8	58.7	66.5	74.4	82.3	90.2	98.0	105.9	113.8
1.17	48	12.031	56	14.036	18.9	28.7	46.5	54.3	62.2	70.1	78.0	85.8	93.7	101.6	109.5
1.18	34	8.522	40	10.026	24.8	34.6	52.4	60.2	68.1	76.0	83.9	91.7	99.6	107.5	115.4
1.18	68	17.043	80	20.051	. . .	. . .	37.8	45.7	53.5	61.4	69.3	77.2	85.0	92.9	100.8
1.18	44	11.028	52	13.033	20.5	30.3	48.0	55.9	63.8	71.7	79.5	87.4	95.3	103.2	111.0
1.20	40	10.026	48	12.031	22.0	31.9	49.6	57.5	65.4	73.2	81.1	89.0	96.9	104.7	112.6
1.20	60	15.038	72	18.046	. . .	23.2	40.9	48.8	56.7	64.6	72.4	80.3	88.2	96.1	103.9
1.21	56	14.036	68	17.043	. . .	24.8	42.5	50.4	58.3	66.1	74.0	81.9	89.8	97.6	105.5
1.22	36	9.023	44	11.028	23.6	33.5	51.2	59.1	66.9	74.8	82.7	90.6	98.4	106.3	114.2
1.23	52	13.033	64	16.041	. . .	26.3	44.1	52.0	59.8	67.7	75.6	83.5	91.3	99.2	107.1
1.24	90	22.557	112	28.072	. . .	. . .	. . .	34.9	42.8	50.7	58.6	66.5	74.4	82.3	90.1
1.25	48	12.031	60	15.038	18.1	27.9	45.7	53.5	61.4	69.3	77.2	85.0	92.9	100.8	108.7
1.25	64	16.041	80	20.051	. . .	20.8	38.5	46.4	54.3	62.2	70.1	77.9	85.8	93.7	101.6
1.25	72	18.046	90	22.557	. . .	. . .	35.0	42.9	50.7	58.6	66.5	74.4	82.3	90.1	98.0
1.26	38	9.524	48	12.031	22.4	32.3	50.0	57.9	65.7	73.6	81.5	89.4	97.2	105.1	113.0
1.27	44	11.028	56	14.036	19.6	29.5	47.2	55.1	63.0	70.9	78.7	86.6	94.5	102.4	110.2
1.29	56	14.036	72	18.046	. . .	23.9	41.7	49.6	57.5	65.3	73.2	81.1	89.0	96.8	104.7
Belt Length Factor —>					0.8	0.9	0.95		1.0		1.05			1.1	

NOTES: All 20MM HTD Drives operating above 1000 RPM may require a sound dampening guard.
Belt lengths of 5200, 5600, 6000, and 6400 are also available. Interpolate center distance.

FEATURES/BENEFITS PAGE PT11-2	SPECIFICATIONS PAGE PT11-4	ENGINEERING/TECHNICAL PAGE PT11-64	

20MM Ratio/Center Distance Tables

Drive Ratio	Sprocket Combination				Nominal Center Distance										
	Driver		Driven		Belt Length Code Designation										
	No. Of Teeth	Pitch Dia.	No. Of Teeth	Pitch Dia.	2000	2500	3400	3800	4200	4600	5000	5400	5800	6200	6600
Belt Length Factor —>					0.8	0.9	0.95		1.0		1.05			1.1	
1.29	34	8.522	44	11.028	24.0	33.8	51.6	59.4	67.3	75.2	83.1	90.9	98.8	106.7	114.6
1.30	40	10.026	52	13.033	21.2	31.1	48.8	56.7	64.6	72.4	80.3	88.2	96.1	103.9	111.8
1.31	52	13.033	68	17.043	. . .	25.5	43.3	51.2	59.0	66.9	74.8	82.7	90.5	98.4	106.3
1.32	68	17.043	90	22.557	. . .	. . .	35.7	43.6	51.5	59.4	67.3	75.2	83.0	90.9	98.8
1.33	36	9.023	48	12.031	22.8	32.6	50.4	58.3	66.1	74.0	81.9	89.8	97.6	105.5	113.4
1.33	48	12.031	64	16.041	17.2	27.1	44.8	52.7	60.6	68.5	76.4	84.2	92.1	100.0	107.9
1.33	60	15.038	80	20.051	. . .	21.5	39.3	47.2	55.1	63.0	70.8	78.7	86.6	94.5	102.3
1.36	44	11.028	60	15.038	18.8	28.7	46.4	54.3	62.2	70.1	77.9	85.8	93.7	101.6	109.4
1.37	38	9.524	52	13.033	21.6	31.5	49.2	57.1	64.9	72.8	80.7	88.6	96.4	104.3	112.2
1.38	52	13.033	72	18.046	. . .	24.7	42.5	50.3	58.2	66.1	74.0	81.9	89.7	97.6	105.5
1.40	40	10.026	56	14.036	20.4	30.3	48.0	55.9	63.8	71.6	79.5	87.4	95.3	103.1	111.0
1.40	80	20.051	112	28.072	. . .	. . .	28.9	36.8	44.7	52.6	60.5	68.4	76.3	84.2	92.1
1.41	64	16.041	90	22.557	. . .	. . .	36.5	44.4	52.3	60.2	68.0	75.9	83.8	91.7	99.6
1.41	34	8.522	48	12.031	23.2	33.0	50.8	58.6	66.5	74.4	82.3	90.1	98.0	105.9	113.8
1.42	48	12.031	68	17.043	. . .	26.3	44.0	51.9	59.8	67.7	75.6	83.4	91.3	99.2	107.1
1.43	56	14.036	80	20.051	. . .	22.2	40.0	47.9	55.8	63.7	71.6	79.5	87.4	95.2	103.1
1.44	36	9.023	52	13.033	22.0	31.8	49.6	57.5	65.3	73.2	81.1	89.0	96.8	104.7	112.6
1.45	44	11.028	64	16.041	17.9	27.8	45.6	53.5	61.4	69.3	77.1	85.0	92.9	100.8	108.6
1.47	38	9.524	56	14.036	20.7	30.6	48.4	56.3	64.1	72.0	79.9	87.8	95.6	103.5	111.4
1.50	40	10.026	60	15.038	19.5	29.4	47.2	55.1	62.9	70.8	78.7	86.6	94.5	102.3	110.2
1.50	48	12.031	72	18.046	. . .	25.4	43.2	51.1	59.0	66.9	74.7	82.6	90.5	98.4	106.3
1.50	60	15.038	90	22.557	. . .	. . .	37.2	45.1	53.0	60.9	68.8	76.7	84.6	92.5	100.3
1.53	34	8.522	52	13.033	22.3	32.2	50.0	57.8	65.7	73.6	81.5	89.3	97.2	105.1	113.0
1.54	52	13.033	80	20.051	. . .	23.0	40.8	48.7	56.6	64.5	72.4	80.2	88.1	96.0	103.9
1.55	44	11.028	68	17.043	17.0	27.0	44.8	52.7	60.6	68.4	76.3	84.2	92.1	100.0	107.8
1.56	36	9.023	56	14.036	21.1	31.0	48.8	56.6	64.5	72.4	80.3	88.2	96.0	103.9	111.8
1.56	72	18.046	112	28.072	. . .	. . .	30.3	38.2	46.2	54.1	62.0	69.9	77.8	85.7	93.6
1.58	38	9.524	60	15.038	19.9	29.8	47.6	55.4	63.3	71.2	79.1	87.0	94.8	102.7	110.6
1.60	40	10.026	64	16.041	18.6	28.6	46.4	54.3	62.1	70.0	77.9	85.8	93.7	101.5	109.4
1.60	90	22.557	144	36.092	. . .	. . .	. . .	. . .	36.0	44.0	51.9	59.8	67.8	75.7	83.6
1.61	56	14.036	90	22.557	. . .	. . .	37.9	45.9	53.8	61.7	69.6	77.4	85.3	93.2	101.1
1.64	44	11.028	72	18.046	. . .	26.1	44.0	51.9	59.7	67.6	75.5	83.4	91.3	99.2	107.0
1.65	34	8.522	56	14.036	21.5	31.4	49.1	57.0	64.9	72.8	80.7	88.5	96.4	104.3	112.2
1.65	68	17.043	112	28.072	. . .	. . .	31.0	39.0	46.9	54.8	62.7	70.7	78.5	86.4	94.3
1.67	36	9.023	60	15.038	20.2	30.2	47.9	55.8	63.7	71.6	79.5	87.4	95.2	103.1	111.0
1.67	48	12.031	80	20.051	. . .	23.7	41.5	49.4	57.3	65.2	73.1	81.0	88.9	96.8	104.7
1.68	38	9.524	64	16.041	19.0	28.9	46.7	54.6	62.5	70.4	78.3	86.2	94.0	101.9	109.8
1.70	40	10.026	68	17.043	17.8	27.7	45.5	53.4	61.3	69.2	77.1	85.0	92.9	100.7	108.6
1.73	52	13.033	90	22.557	. . .	20.7	38.7	46.6	54.5	62.4	70.3	78.2	86.1	94.0	101.9
1.75	64	16.041	112	2.072	. . .	. . .	31.7	39.7	47.6	55.6	63.5	71.4	79.3	87.2	95.1
1.76	34	9.023	60	15.038	20.6	30.5	48.3	56.2	64.1	72.0	79.9	87.7	95.6	103.5	111.4
1.78	36	9.023	64	16.041	19.4	29.3	47.1	55.0	62.9	70.8	78.7	86.5	94.4	102.3	110.2
1.79	38	9.524	68	17.043	18.1	28.1	45.9	53.8	61.7	69.6	77.5	85.4	93.2	101.1	109.0
1.80	40	10.026	72	18.046	16.8	26.9	44.7	52.6	60.5	68.4	76.3	84.2	92.0	99.9	107.8
1.80	80	20.051	144	36.092	. . .	. . .	. . .	. . .	37.7	45.7	53.7	61.7	69.6	77.5	85.4
1.82	44	11.028	80	20.051	. . .	24.4	42.3	50.2	58.1	66.0	73.9	81.8	89.7	97.5	105.4
1.87	60	15.038	112	28.072	. . .	. . .	32.4	40.4	48.4	56.3	64.2	72.1	80.0	87.9	95.8
1.87	90	22.557	168	42.108	. . .	. . .	. . .	. . .	. . .	38.5	46.6	54.6	62.6	70.6	78.5
1.88	48	12.031	90	22.557	. . .	21.4	39.4	47.3	55.3	63.2	71.1	79.0	86.8	94.7	102.6
1.88	34	8.522	64	16.041	19.7	29.7	47.5	55.4	63.3	71.2	79.0	86.9	94.8	102.7	110.6
Belt Length Factor —>					0.8	0.9	0.95		1.0		1.05			1.1	

NOTES: All 20MM HTD Drives operating above 1000 RPM may require a sound dampening guard.
Belt lengths of 5200, 5600, 6000, and 6400 are also available. Interpolate center distance.

FEATURES/BENEFITS PAGE PT11-2	SPECIFICATIONS PAGE PT11-4	ENGINEERING/TECHNICAL PAGE PT11-64	

SELECTION

20MM Ratio/Center Distance Tables

Drive Ratio	Sprocket Combination				Nominal Center Distance										
	Driver		Driven		Belt Length Code Designation										
	No. Of Teeth	Pitch Dia.	No. Of Teeth	Pitch Dia.	2000	2500	3400	3800	4200	4600	5000	5400	5800	6200	6600
Belt Length Factor —>					0.8	0.9	0.95		1.0		1.05			1.1	
1.89	36	9.023	68	17.043	18.4	28.4	46.3	54.2	62.1	70.0	77.9	85.7	93.6	101.5	109.4
1.89	38	9.524	72	18.046	17.2	27.2	45.1	53.0	60.9	68.8	76.7	84.5	92.4	100.3	108.2
2.00	34	8.522	68	17.043	18.8	28.8	46.6	54.6	62.5	70.3	78.2	86.1	94.0	101.9	109.8
2.00	36	9.023	72	18.046	17.5	27.6	45.4	53.3	61.2	69.1	77.0	84.9	92.8	100.7	108.6
2.00	40	10.026	80	20.051	. . .	25.1	43.0	50.9	58.8	66.7	74.6	82.5	90.4	98.3	106.2
2.00	56	14.036	112	28.072	. . .	. . .	33.1	41.1	49.1	57.0	65.0	72.9	80.8	88.7	96.6
2.00	72	18.046	144	36.092	. . .	. . .	. . .	30.9	39.1	47.1	55.1	63.1	71.1	79.0	86.9
2.05	44	11.028	90	22.557	. . .	22.1	40.1	48.1	56.0	63.9	71.8	79.7	87.6	95.5	103.4
2.10	80	20.051	168	42.108	. . .	. . .	. . .	. . .	. . .	40.2	48.3	56.4	64.4	72.3	80.3
2.11	38	9.524	80	20.051	. . .	25.4	43.4	51.3	59.2	67.1	75.0	82.9	90.8	98.7	106.6
2.12	34	8.522	72	18.046	17.8	27.9	45.8	53.7	61.6	69.5	77.4	85.3	93.2	101.1	109.0
2.12	68	17.043	144	36.092	. . .	. . .	. . .	31.6	39.8	47.8	55.8	63.8	71.8	79.7	87.6
2.13	90	22.557	192	48.123	. . .	. . .	. . .	. . .	. . .	. . .	40.9	49.1	57.2	65.2	73.2
2.15	52	13.033	112	28.072	. . .	. . .	33.8	41.8	49.8	57.8	65.7	73.6	81.5	89.4	97.3
2.22	36	9.023	80	20.051	. . .	25.8	43.7	51.7	59.6	67.5	75.4	83.3	91.2	99.1	106.9
2.25	40	10.026	90	22.557	. . .	22.7	40.8	48.8	56.7	64.6	72.6	80.5	88.4	96.2	104.1
2.25	64	16.041	144	36.092	. . .	. . .	. . .	32.3	40.4	48.5	56.5	64.5	72.5	80.4	88.4
2.33	48	12.031	112	28.072	. . .	. . .	34.5	42.5	50.5	58.5	66.4	74.4	82.3	90.2	98.1
2.33	72	18.046	168	42.108	. . .	. . .	. . .	. . .	33.2	41.5	49.7	57.7	65.8	73.8	81.7
2.35	34	8.522	80	20.051	. . .	26.1	44.1	52.0	59.9	67.9	75.8	83.7	91.5	99.4	107.3
2.37	38	9.524	90	22.557	. . .	23.1	41.2	49.2	57.1	65.0	72.9	80.8	88.7	96.6	104.5
2.40	60	15.038	144	36.092	. . .	. . .	. . .	32.9	41.1	49.2	57.3	65.2	73.2	81.2	89.1
2.40	80	20.051	192	48.123	. . .	. . .	. . .	. . .	. . .	. . .	42.5	50.7	58.9	67.0	75.0
2.40	90	22.557	216	54.139	. . .	. . .	. . .	. . .	. . .	. . .	. . .	43.1	51.4	59.6	67.8
2.47	68	17.043	168	42.108	. . .	. . .	. . .	. . .	33.9	42.2	50.3	58.4	66.5	74.5	82.5
2.50	36	9.023	90	22.557	. . .	23.4	41.5	49.5	57.5	65.4	73.3	81.2	89.1	97.0	104.9
2.55	44	11.028	112	28.072	. . .	. . .	35.1	43.2	51.2	59.2	67.1	75.1	83.0	90.9	98.8
2.57	56	14.036	144	36.092	. . .	. . .	. . .	33.6	41.8	49.9	58.0	66.0	73.9	81.9	89.8
2.63	64	16.041	168	42.108	. . .	. . .	. . .	. . .	34.5	42.8	51.0	59.1	67.2	75.2	83.2
2.65	34	8.522	90	22.557	. . .	23.7	41.9	49.9	57.8	65.7	73.7	81.6	89.5	97.4	105.3
2.67	72	18.046	192	48.123	. . .	. . .	. . .	. . .	. . .	35.4	43.8	52.1	60.3	68.3	76.4
2.70	80	20.051	216	54.139	. . .	. . .	. . .	. . .	. . .	. . .	. . .	44.8	53.1	61.3	69.5
2.77	52	13.033	144	36.092	. . .	. . .	. . .	34.2	42.5	50.6	58.7	66.7	74.7	82.6	90.6
2.80	40	10.026	112	28.072	. . .	. . .	35.8	43.9	51.9	59.9	67.9	75.8	83.7	91.7	99.6
2.80	60	15.038	168	42.108	. . .	. . .	. . .	. . .	35.2	43.5	51.7	59.8	67.9	75.9	83.9
2.82	68	17.043	192	48.123	. . .	. . .	. . .	. . .	. . .	36.1	44.5	52.8	60.9	69.0	77.1
2.95	38	9.524	112	28.072	. . .	. . .	36.2	44.3	52.3	60.3	68.2	76.2	84.1	92.0	99.9
3.00	48	12.031	144	36.092	. . .	. . .	26.4	34.9	43.1	51.3	59.3	67.4	75.4	83.3	91.3
3.00	56	14.036	168	42.108	. . .	. . .	. . .	. . .	35.8	44.2	52.4	60.5	68.6	76.6	84.6
3.00	64	16.041	192	48.123	. . .	. . .	. . .	. . .	. . .	36.7	45.1	53.4	61.6	69.7	77.8
3.00	72	18.046	216	54.139	. . .	. . .	. . .	. . .	. . .	. . .	. . .	46.1	54.4	62.7	70.8
3.11	36	9.023	112	28.072	. . .	. . .	36.5	44.6	52.6	60.6	68.6	76.5	84.5	92.4	100.3
3.18	68	17.043	216	54.139	. . .	. . .	. . .	. . .	. . .	. . .	38.1	46.7	55.1	63.3	71.5
3.20	60	15.038	192	48.123	. . .	. . .	. . .	. . .	. . .	37.3	45.8	54.1	62.3	70.4	78.5
3.23	52	13.033	168	42.108	. . .	. . .	. . .	. . .	36.5	44.8	53.1	61.2	69.3	77.3	85.3
3.27	44	11.028	144	36.092	. . .	. . .	27.1	35.6	43.8	52.0	60.0	68.1	76.1	84.1	92.0
3.29	34	8.522	112	28.072	. . .	. . .	36.8	44.9	53.0	61.0	69.0	76.9	84.8	92.8	100.7
3.38	64	16.041	216	54.139	. . .	. . .	. . .	. . .	. . .	. . .	38.8	47.3	55.7	64.0	72.2
3.43	56	14.036	192	48.123	. . .	. . .	. . .	. . .	. . .	38.0	46.4	54.8	63.0	71.1	79.2
3.50	48	12.031	168	42.108	. . .	. . .	. . .	. . .	37.1	45.5	53.7	61.9	70.0	78.0	86.0
Belt Length Factor —>					0.8	0.9	0.95		1.0		1.05			1.1	

NOTES: All 20MM HTD Drives operating above 1000 RPM may require a sound dampening guard.
Belt lengths of 5200, 5600, 6000, and 6400 are also available. Interpolate center distance.

FEATURES/BENEFITS PAGE PT11-2	SPECIFICATIONS PAGE PT11-4	ENGINEERING/TECHNICAL PAGE PT11-64	

20MM Ratio/Center Distance Tables

Drive Ratio	Sprocket Combination				Nominal Center Distance										
	Driver		Driven		Belt Length Code Designation										
	No. Of Teeth	Pitch Dia.	No. Of Teeth	Pitch Dia.	2000	2500	3400	3800	4200	4600	5000	5400	5800	6200	6600
Belt Length Factor —>					0.8	0.9	0.95		1.0		1.05			1.1	
3.60	40	10.026	144	36.092	. . .	. . .	27.7	36.2	44.5	52.6	60.7	68.8	76.8	84.8	92.7
3.60	60	15.038	216	54.139	. . .	. . .	. . .	. . .	. . .	. . .	39.4	48.0	56.4	64.7	72.9
3.69	52	13.033	192	48.123	. . .	. . .	. . .	. . .	. . .	38.6	47.1	55.4	63.6	71.8	79.9
3.79	38	9.524	144	36.092	. . .	. . .	28.0	36.5	44.8	53.0	61.1	69.1	77.1	85.1	93.1
3.82	44	11.028	168	42.108	. . .	. . .	. . .	29.1	37.8	46.1	54.4	62.6	70.6	78.7	86.7
3.86	56	14.036	216	54.139	. . .	. . .	. . .	. . .	. . .	. . .	40.0	48.6	57.0	65.3	73.5
4.00	36	9.023	144	36.092	. . .	. . .	28.3	36.9	45.1	53.3	61.4	69.5	77.5	85.5	93.4
4.00	48	12.031	192	48.123	. . .	. . .	. . .	. . .	. . .	39.2	47.7	56.1	64.3	72.5	80.6
4.15	52	13.033	216	54.139	. . .	. . .	. . .	. . .	. . .	. . .	40.7	49.3	57.7	66.0	74.2
4.20	40	10.026	168	42.108	. . .	. . .	. . .	29.7	38.4	46.8	55.1	63.2	71.3	79.4	87.4
4.24	34	8.522	144	36.092	. . .	. . .	28.7	37.2	45.5	53.7	61.8	69.8	77.8	85.8	93.8
4.36	44	11.028	192	48.123	. . .	. . .	. . .	. . .	. . .	39.9	48.4	56.7	65.0	73.1	81.2
4.42	38	9.524	168	42.108	. . .	. . .	. . .	30.1	38.7	47.1	55.4	63.6	71.7	79.7	87.8
4.50	48	12.031	216	54.139	. . .	. . .	. . .	. . .	. . .	. . .	41.3	49.9	58.3	66.7	74.9
4.67	36	9.023	168	42.108	. . .	. . .	. . .	30.4	39.0	47.5	55.7	63.9	72.0	80.1	88.1
4.80	40	10.026	192	48.123	. . .	. . .	. . .	. . .	31.7	40.5	49.0	57.4	65.6	73.8	81.9
4.91	44	11.028	216	54.139	. . .	. . .	. . .	. . .	. . .	. . .	41.9	50.6	59.0	67.3	75.6
4.94	34	8.522	168	4.108	. . .	. . .	. . .	30.7	39.4	47.8	56.1	64.2	72.4	80.4	88.5
5.05	38	9.524	192	48.123	. . .	. . .	. . .	. . .	32.0	40.8	49.4	57.7	66.0	74.2	82.3
5.33	36	9.023	192	48.123	. . .	. . .	. . .	. . .	32.3	41.1	49.7	58.0	66.3	74.5	82.6
5.40	40	10.026	216	54.139	. . .	. . .	. . .	. . .	. . .	. . .	42.5	51.2	59.6	68.0	76.2
5.65	34	8.522	192	48.123	. . .	. . .	. . .	. . .	32.6	41.4	50.0	58.4	66.6	74.8	83.0
5.68	38	9.524	216	54.139	. . .	. . .	. . .	. . .	. . .	33.9	42.9	51.5	60.0	68.3	76.6
6.00	36	9.023	216	54.139	. . .	. . .	. . .	. . .	. . .	34.2	43.2	51.8	60.3	68.6	76.9
6.35	34	8.522	216	54.139	. . .	. . .	. . .	. . .	. . .	34.5	43.5	52.1	60.6	69.0	77.2
Belt Length Factor —>					0.8	0.9	0.95		1.0		1.05			1.1	

NOTES: All 20MM HTD Drives operating above 1000 RPM may require a sound dampening guard.
Belt lengths of 5200, 5600, 6000, and 6400 are also available. Interpolate center distance.

V-Drives
FHP Drives
Drive Component Accessories
DYNA-SYNC
HT200/HTD Synchronous Drives
HT500 Synchronous Drives
Roller Chain Sprockets

Overhung Load Calculations

Overhung load is an important consideration for drive design. Motor and reducer bearings are rated for specific load capacities to achieve calculated life. If the drive design is such that bearing loads are exceeded, life will be proportionally reduced. Likewise, if the drive exerts a lesser load on the bearings, life will be extended. Needless to say, drive design that keeps bearing loads below ratings can pay big dividends.

BELT PULL: The basis for overhung load calculation is belt pull. Belt pull is the result of torque being transmitted when the belt exerts a pull on the sprocket diameter.

EXAMPLE: 5 horsepower at 200 RPM is 1,575 inch- pounds of torque. If a 6 inch diameter sprocket is used, (3 inch radius), 1,575/3 = 525 pounds effective belt pull is required. Note that if a larger diameter sprocket is used, belt pull is reduced accordingly.

Belt pull can be calculated using the following formula:

$$\text{Belt Pull (lbs)} = \frac{126{,}000 \times \text{DHP} \times \text{F}}{\text{RPM} \times \text{PD}}$$

Where: DHP = Design Horsepower

F = Drive Factor (1.3 for sync. belt)

RPM = Shaft RPM

PD = Pitch Diameter of Sprocket

BEARING LOAD: Belt pull translates into bearing load and is greatly affected by the location of the sprocket on the shaft. Fig. 1 shows an example of what happens as the distance between the centerline of belt pull and the adjacent bearing is extended.

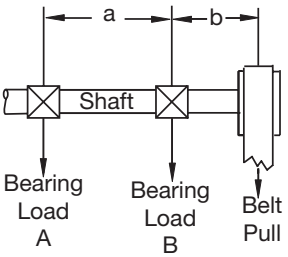

Overhung Sheave

$$\text{Load at B, lbs.} = \frac{\text{Belt Pull} \times (a + b)}{a}$$

Fig. 1

a	b	Belt Pull	Bearing Load "B"
10 in.	1 in.	500 lbs.	550 lbs.
10 in.	5 in.	500 lbs.	750 lbs.

Now consider the same situation for a motor or gearbox.

Referring to Fig. 2, it should be obvious that the HT/HTD sprocket should be mounted as close as possible to the face of the gearbox.

As the distance between the gearbox face and HT/HTD sprocket increases, the bearing load is also increased, which leads to a reduction in bearing life.

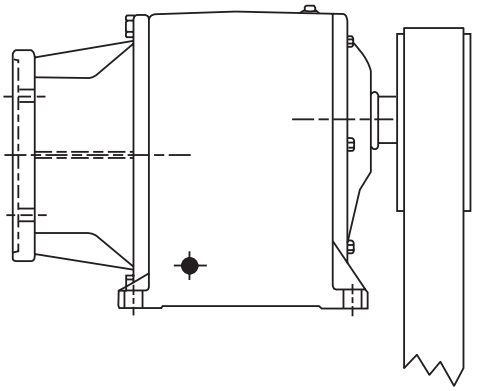

Fig. 2

Another warning from gearbox manufacturers is that the centerline of belt pull should not extend beyond the end of the shaft. Given a choice of a small diameter, wide face-width drive design, or a larger diameter, narrower face-width alternative, the latter would be preferable if bearing life is an important consideration.

DRIVE DESIGN CONSIDERATIONS

For any given application, there are usually several possible drive alternatives. In some cases, the selection with the smallest diameter sprockets might be the least expensive. As can be seen from the previous discussion, this alternative could be a bad choice. Smaller diameter sprockets lead to higher belt pull; their greater width is also more sensitive to misalignment.

HT/HTD Drive Installation

SPROCKET INSTALLATION

1. Thoroughly inspect the bore of the sprocket and the tapered surface of the bushing. Any paint, dirt, oil or grease must be removed.
2. Assemble bushing into sprocket. Loosely insert the screws into assembly. At least one sprocket must have flanges.
3. With key in keyseat of shaft, slide sprocket to its desired position with screw heads to the outside. If it is hard to slide the bushing onto the shaft, check shaft for burrs, etc.
4. Line up assembly so as not to misalign belts and tighten screws evenly and progressively. Apply the recommended torque to screws.

SPROCKET ALIGNMENT

HT/HTD sprocket alignment and parallelism of the shafts are very important. Proper alignment helps to equalize the load across the entire belt width, thereby reducing wear and extending belt life.

Place a straightedge against the outside edge of the sprockets and move sprockets until the straightedge touches the two outside and two inside edges of the sprockets. The straightedge should cross the sprockets as close to the shafts as possible. A string can be used if a straightedge is not available. Remember the string should contact at four points as explained above. (See illustration on page PT11-66.

After aligning the sprockets, check the rigidity of the supporting framework. Shafts should be well supported to prevent distortion and a resulting change in the center distance under load. Do not use spring-loaded or weighted idlers. Idler sprockets or pulleys must be locked into position after adjusting belt tension.

BELT INSTALLATION & TENSIONING

Do not pry or otherwise force the belt onto the sprockets, as this can result in permanent damage to the belt. Reduce the center distance between the pulleys so that the belt can be easily installed.

HT 200 drives must be properly tensioned. If the belt is too loose, it may jump teeth when heavier loads are applied. If the belt is too tight, belt life will suffer, and bearings will be unnecessarily overloaded. Improper tension can result in excessive drive noise.

Tensioning procedure: First, measure the span length and calculate the deflection distance of 1/64, per inch span (see illustration).

Use the formula method on page PT11-66 to calculate recommended deflection forces.

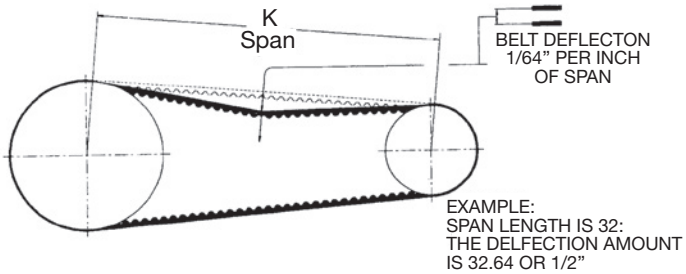

Apply a force (from the table) at the center of the span. Measure the deflection with this force applied. Move the center distance until the proper deflection is obtained.

V-Drives
FHP Drives
Drive Component Accessories
DYNA-SYNC
HT200/HTD Synchronous Drives
HT500 Synchronous Drives
Roller Chain Sprockets

Drive Alignment

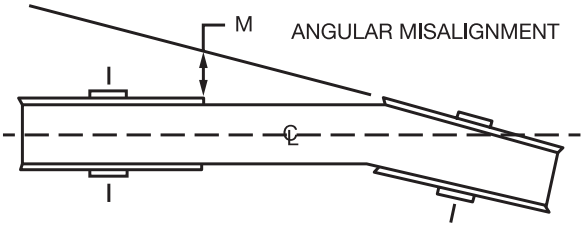

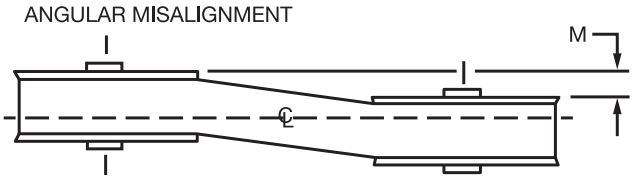

Good tracking of synchronous belts on their sprockets depends upon alignment to within 1/4 degree. This translates to a maximum "M" dimension of 0.05" per foot center distance.

Drive Tensioning

Formula Method

The formula method for determining belt tension may be used for greater accuracy, or for applications that fall out of guidelines given for the Simplified Method on page PT11-65.

Step 1. Calculate Min. Installation Tension:

Formula 1: $$T = \frac{20\,(HP)}{V} + mV^2$$

Where: HP = Horsepower

$$V = \frac{\text{Belt Velocity (in FPM)}}{1000}$$

m = Value in Table 1
Belt Velocity = PD x RPM x .262
(PD = Pitch Dia. in inches)

***Important!** If formula calculation for "T" is less than "Min T. Value" (Table 1) use the "Min T. Value" for T. Always use the greater T value: i.e. from T Formula 1 or Table 1.

Step 2. Calculate Deflection Forces:

Formula 2: $$\text{Min Force} = \frac{1.0T + (K/L)Y}{16} \quad \text{(lbs)}$$

Formula 3: $$\text{Max Force} = \frac{1.1T + (K/L)Y}{16} \quad \text{(lbs)}$$

Note: For used belt, use 0.7T to 0.8T instead of the 1.0T and 1.1T for new belts.

T = Static tension, lbs
K = Span length, inches
L = Belt length, inches
Y = Factor from Table 1

Step 3. Adjust tension per Simplified Method Procedure on page PT11-65 using deflection forces from Step 2.

Table 1

Belt		Factors		Min. T
Pitch	Width	m	Y	Value*
5MM	15MM	0.28	24.9	14.1
5MM	25MM	0.47	41.5	23.4
8MM	20MM	0.58	34.2	18.5
8MM	30MM	0.88	51.3	30.0
8MM	50MM	1.46	85.5	52.0
8MM	85MM	2.45	145.3	94.5
14MM	40MM	1.78	93.0	76.5
14MM	55MM	2.44	127.9	120.0
14MM	85MM	3.77	197.7	205.5
14MM	115MM	5.11	267.5	291.0
14MM	170MM	7.55	395.4	447.0
20MM	115MM	7.24	367.0	391.5
20MM	170MM	10.71	542.5	603.0
20MM	230MM	14.49	734.0	834.0
20MM	290MM	18.27	925.4	1065.0
20MM	340MM	21.42	1085.0	1257.5

DODGE Software

Computer Selection of DODGE Synchronous Belt Drives

VIA-SYNC®

Synchronous Belt Drive Selection

For any given synchronous drive application, there may be several DODGE HT/HTD* or DODGE DYNA-SYNC® product combinations that could satisfy the requirements. Finding the best drive can be a time-consuming and frustrating task.

The DODGE VIA-SYNC program provides selections for DYNA-SYNC (timing) and HT/HTD drives and includes both TAPER-LOCK® and QD* type sprockets. All relevant data for up to ten alternative drive selections is presented in a format that allows quick and accurate analysis, whether based upon lowest price, minimum bearing load, highest service factor, etc.

VIA-SYNC calculates speed up drives or drives for nonstandard motor speeds. The most appropriate selection can then be specified using the computer printout, which contains sprocket, bushing and belt sizes and part numbers.

VIA-SYNC has the capability of sharing data with DODGE T-A DISCovery™ or DODGE SCD DISCovery™ programs.

DRIVE TROUBLESHOOTING

Problem	Cause	Remedy
Unusual Noise	Misaligned drive	Re-adjust alignment
	Hi or Low belt tension	Adjust to recommended value
	Backside idler	Use inside idler
	Worn sprocket	Replace sprocket
	Bent sprocket flange	Replace or repair
	Excessive belt speed	Redesign drive
	Incorrect belt profile	Replace with DODGE belt
	Subminimal spkt. dia.	Redesign with lager spkts.
	Excessive load	Use higher capacity drive
	Weak mntg. structure	
Loss of Belt Tension	Weak mntg. structure	Reinforce mounting structure
	Excessive spkt. wear	Use wear-resistant sprockets
	Fixed center drive	Install inside idler
	Excessive debris	Install adequate drive guard.
	Excessive load	Use higher capacity drive
	Subminimal spkt. dia.	Redesign drive
	Drive running hot	Use heat fingers on hot shaft
	Belt degradation	Protect from excessive heat
Belt Edge Wear	Damaged flanges	Repair or replace sprocket
	Low belt tension	Adjust to recommended value
	Poor tracking	Correct alignment
	Guard interference	Remove obstruction, add idler
Pre-mature Tooth Wear	Improper tension	Correct drive tension
	Poor alignment	Correct drive alignment
	Wrong belt type	Use correct DODGE belt
	Worn sprocket	Replace
	Damaged sprocket	Replace
	Excessive load	Use higher capacity drive
	Dirt or debris	Install adequate drive guard
	Sprocket wobble	Correct bushing installation

Problem	Cause	Remedy
Tooth Shear	Shock loads	Use higher capacity drive
	Few teeth in mesh	Redesign drive
	Worn sprocket	Replace
	Backside idler	Use inside idler
	Wrong belt profile	Use correct DODGE belt
	Low belt tension	Adjust to recommended value
Tensile Break	Shock load	Use higher capacity drive
	Subminimal spkt. dia.	Redesign with larger spkts.
	Debris in drive	Install adequate drive guard
	Improper belt handling, storage	Do not crimp belt or subject it to sharp bends
Belt Cracking	Subminimal spkt. dia.	Redesign with larger spkts.
	Backside idler	Install inside idler
	Start-up temp below 180 degrees F	Preheat drive before start-up
	Extended exposure to harsh chemicals	Protect drive
Bearing Failure	Excessive belt tension	Adjust to recommended value
	Drive misalignment	Re-adjust alignment
	Subminimal spkt. dia.	Redesign with larger spkts.
Vibration	Wrong belt profile	Install correct DODGE belt
	Hi or Low belt tension	Adjust to recommended value Install
	Loose key or bushing	per instructions
	Loose mounting structure	Reinforce or tighten
Belt not Tracking	Misalignment	Re-adjust alignment
	Long center distance	Carefully adjust alignment
	Mtg. structure bending	Reinforce mounting structure

V-Drives
FHP Drives
Drive Component Accessories
DYNA-SYNC
HT200/HTD Synchronous Drives
HT500 Synchronous Drives
Roller Chain Sprockets

NOTES

CONTENTS

HT500 Synchronous Belt Drives

Features and Benefits PT12-2

Specification

HT500 TAPER-LOCK Sprockets PT12-6
HT500 MPB Sprockets PT12-12
HT500 ACHE Sprockets PT12-14
HT500 Idler Sprockets PT12-16
HT500 Belts PT12-17

Selection

HT500 Drive Selection PT12-19
Basic HP Ratings - 8mm PT12-38
Basic HP Ratings - 14mm PT12-42
8M HT500 Selection Table PT12-47
14M HT500 Selection Table PT12-63

Engineering/Technical

Overhung Load Calculation PT12-77
HT500 Drive Installation PT12-78
Belt Installation and Tensioning PT12-79
Drive Alignment PT12-80
Drive Tensioning PT12-81
Troubleshooting PT12-82

Part Number Index INDEX-1
Keyword Index INDEX-43

FEATURES / BENEFITS

HT500 Drives - The TCO Drive Solution: Energy Efficient - Maintenance Free

HT500 high torque synchronous drive system is the latest generation in the Baldor•Dodge synchronous product line. The HT500 belt is manufactured with polyurethane, carbon fiber cords and a black nylon tooth facing, featuring the modified curvilinear tooth profile. This drive system utilizes Baldor•Dodge's Taper-Lock® bushing system to deliver our most power dense synchronous drive in a compact package. Also available from stock: Fin fan sprockets with QD* bushings, and minimum-plain-bore (MPB) sprockets.

Value added Features

- Virtually maintenance free
- Requires no oil or grease to run slip free
- No need to re-tension the belts
- Compact maintenance free design
- Modified curvilinear tooth profile
- Positive tooth engagement eliminating slippage and speed variation on high torque application
- Low installation tension reducing loads on other power transmission components (i.e., bearings, gearing, motors, etc.)
- Delivers power up to speeds of 10,000 FPM (Standard hardware is rated for 6,500 FPM). Contact Baldor if speeds greater than 6500 FPM are required.
- Higher power ratings than comparable timing belts, making HT500 suited to replace chain drives
- Wide range of stock parts available

Baldor•Dodge HT500 Belts utilize materials that achieve the highest standard of quality and performance in the industry allowing the superior torque capacity needed for high performance

- Belt backing is polyurethane designed for maximum resistance to environmental conditions, oil, grease, and high temperatures
- The belt's carbon fiber cords provide superior tension and torque transmission preventing belt shrinkage and stretch
- Belt's construction helps reduce the belt installation tension increasing the life of the other mechanical components
- Belt's teeth are enclosed in a black nylon tooth face delivering resistance to abrasion and tooth's shear, increasing drive efficiency, belt and sprocket's life, and reducing noise
- Idlers can be used on the backside and front-side of the belt
- With our TAPER-LOCK® bushing installation an easy on, easy off process is assured

*QD is a registered trademark of Emerson Electric

What does the Sprocket bring to the Baldor•Dodge Synchronous Drive System?

Synchronous belt drives run slip-free and are proven to be more efficient and provide better performance than v-belt drives. They also offer significant performance advantages over chain drives related to wear and elongation resistance, they require no lubrication and have broad applicability. It is not necessary to retension synchronous drives – a significant advantage over alternative drive solutions. HT500 synchronous drives can also operate in wet and oily environments.

Baldor•Dodge HT500 synchronous sprockets are manufactured in North America with the highest quality standards.

Our design advantages:

- Positions belt center line closer to motor, reducer, and bearings reducing belt pull while potentially increasing the L10 life of bearings.
- Requires less shaft length than QD style products
- Offers more bore sizes per bushing size than QD style products
- Delivers more torque than QD style products
- Has no protruding flanges or bolt heads

The HT500 synchronous drive system has the potential to improve your overall power transmission package by increasing efficiency, lowering your maintenance cost, downtime, and belt pull to increase the L10 life of bearings.

Our high torque HT500 synchronous drive product is Baldor's commitment to your success by providing you energy savings and overall cost reduction. Another TCO solution for the marketplace!

FEATURES / BENEFITS

Energy Efficient, High Torque Belt Drive System

The US Department of Energy encourages the use of synchronous belts in all motor installations to maintain an overall efficiency rating of 98% across a wide load range. The HT500 Synchronous Belt is designed to offer the energy efficiency of a synchronous belt drive in a compact design.

HT500 75HP Drive Example
Energy Savings = Annual Energy Use x (1 – n1/n2)

Mechanical Drive Comparison			
Application Data		**V-Belt Drive**	**HT500 Drive**
Motor HP	75	Efficiency 93%	Efficiency 98%
RPM	1800	Status: Current	Status: New
Nameplate Efficiency	95.4	264,920 kWh/yr x .93 = 246,376 kWh/yr 264,920 - 246,376 kWh/yr = 18,544 kWh/yr or 7%	264,920 kWh/yr x .98 = 259,622 kWh/yr 264,920 - 259,622 kWh/yr = 5,298 kWh/yr or 2%
Motor Load	75%		
Estimated kW/hr rate	$0.10		
Estimated kW/hr use by motor	264,920 kWh/yr		
Duty Cycle	Continuous 6000 hrs x yr (3 shifts)		
Efficiency loss kWh/yr and $USD		18,544 kWh/yr x $0.10 = $1,854.40 USD	5,298 kWh/yr x $0.10 = $529.80 USD
Kilowatt hour potential savings when Using HT500 Synchronous Drive System		**Energy Savings = 264,920 kWh/yr x (1 – 93/98) = 13,516 kWh/yr 13,516 kWh/yr x $0.10**	
Potential Energy Saving gain from using HT500 Synchronous Drive System		**$1,352.00 USD**	

Additional Benefits from HT500

- No Maintenance Cost
- Zero slip
- Constant time, speed
- Positive engagement
- Less downtime

Our Value added solution will not only save you time and money short term, but many years thereafter

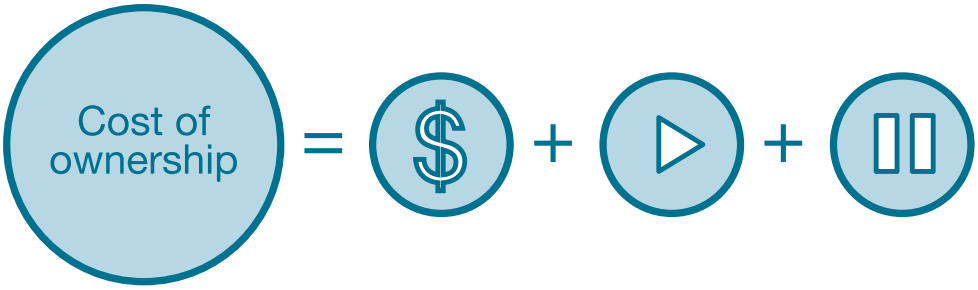

FEATURES / BENEFITS

Energy Efficient, High Torque Belt Drive System

The Institute Electrical and Electronics Engineers (IEEE) conducted a survey to identify major causes of motor failures; the chart below is an abstract from their Petro-Chemical paper PCIC-94-01. It concludes that 51% of all motor failure is attributed to bearing problems. By decreasing the belt pull and overall overhung load, a motor bearing will last longer.

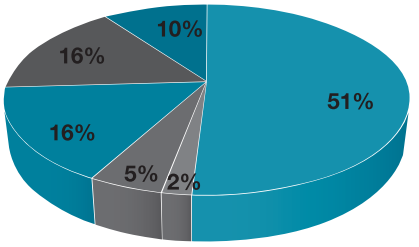

- Bearings
- Shaft Couplings
- Rotor Bar
- Stator Winding
- External - environment, voltage & load. Likely to happen again.
- Unknown - no root failure analysis

HT500 75HP Synchronous Drive vs. V-Belt Drive Comparison

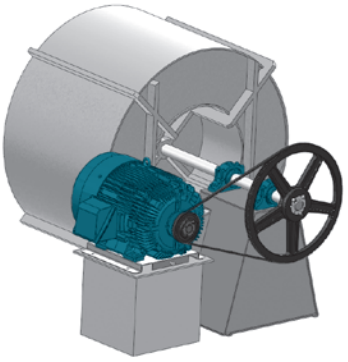

General application specifications

HP:	**75**
Freq:	**60HZ**
Enclosure:	**TEFC**
RPM:	**1800**
Frame:	**365T (NEMA)**
Ratio:	**4:1**

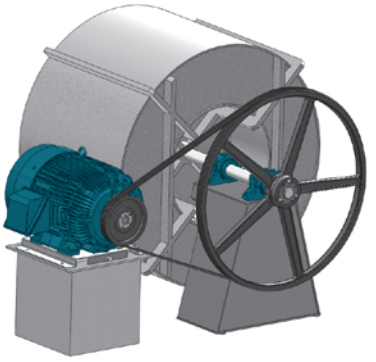

Name	Description	Part Number
Driver Sprocket	14MX-45S-20	482031
Driver Bushing	3020 x 2-3/8-KW	117124
Driven Sprocket	14MX-180S-20	482048
Driven Bushing	3525 x 1-15/16-KW	119709
Belt(s) (QTY:1)	HT500 Belt 3500-14MX-20	142766
Motor	75HP/60HZ/4P/365T Frame	ECP4316T-4
Motor Base	45B type B slide base	122118

HT500 VS V-BELT

Name	Description	Part Number
Driver Sheave	3/5V12.5-3020	111103
Driver Bushing	3020 x 2-3/8-KW	117124
Driven Sheave	3/5V50.0-4040	111014
Driven Bushing	4040 x 1-15/16-KW	117316
Belt(s) (QTY:3)	5VX1800 Belt	107186
Motor	75HP/60HZ/4P/365T Frame	ECP4316T-4
Motor Base	45B type B slide base	122118

Our Total Cost of Ownership Solution!
We want to offer you added value solutions so you can achieve your maximum potential cost savings

- Driver sheave diameter reduced by 38%
- Driven sheave diameter reduced by 37%
- Used 1 belt instead of 3
- Cost Reduction
- Reduced overall drive weight by 51%
- Belt pull reduced by 23% which increases the L10 life of the motor bearing by a factor of 2

HT500 Sprocket & Belt Part Nomenclature

Sprocket Designation

8MX-22S-21 1008

- Sprocket Pitch (8M or 14M)
- Sprocket tooth count
- 21mm width
- 1008 Taper-Lock Bushing

Belt Designation

1610 - 14MX-20

- Belt pitch length of 1610mm
- 14mm Pitch
- 20mm wide

SPECIFICATION

HT500 TAPER-LOCK Sprockets

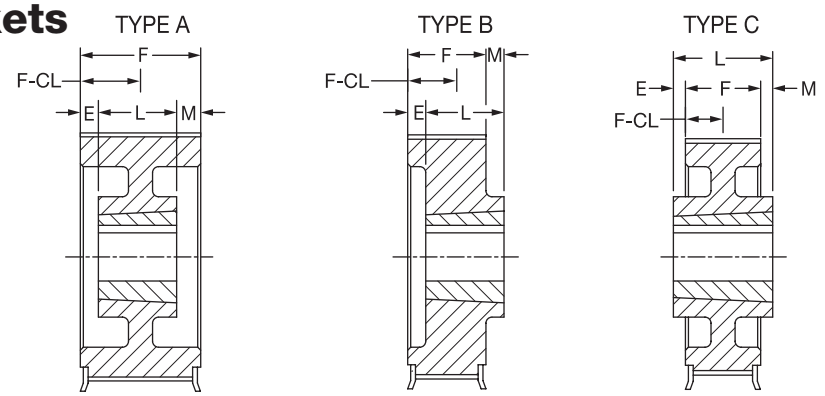

TYPE AF TYPE BF TYPE CF

1 = Block 2 = Web 3 = Arms

The letter "F" in column "Type" indicates that Sprocket has flanges

8M HT500 Sprocket

Sprocket Number	Part No.	No. Of Teeth	Diameters (In.)			Type	Dimensions (In.)			Bore Sizes		Approx. Weight (Lbs.)	Approx. WR^2 (Lb-Ft^2)
			P.D.	O.D.	Flange		E	L	M	Min.	Max		
8MX-12						**F = .85"**							
8MX-22S-12-1008	**481875**	22	2.206	2.143	2.606	A1F	0	0.88	0	1/2	1	0.4	0.0020
8MX-25S-12-1108	**481876**	25	2.506	2.443	2.906	A1F	0	0.88	0	1/2	1	0.6	0.0038
8MX-26S-12-1108	**481877**	26	2.607	2.544	2.906	A1F	0	0.88	0	1/2	1 1/8	0.6	0.0045
8MX-27S-12-1108	**481878**	27	2.707	2.644	3.207	A1F	0	0.88	0	1/2	1 1/8	0.7	0.0054
8MX-28S-12-1108	**481879**	28	2.807	2.744	3.207	A1F	0	0.88	0	1/2	1 1/8	0.9	0.0064
8MX-29S-12-1108	**481880**	29	2.907	2.844	3.090	A1F	0	0.88	0	1/2	1 1/8	0.9	0.0075
8MX-30S-12-1108	**481881**	30	3.008	2.945	3.408	A1F	0	0.88	0	1/2	1 1/8	1.0	0.0087
8MX-31S-12-1210	**481882**	31	3.108	3.045	3.328	A1F	0	1.00	0	1/2	1 1/4	1.1	0.0101
8MX-32S-12-1210	**481883**	32	3.208	3.145	3.608	A1F	0	1.00	0	1/2	1 1/4	1.1	0.0117
8MX-33S-12-1610	**481884**	33	3.308	3.245	3.566	A1F	0	1.00	0	1/2	1 11/16	1.1	0.0152
8MX-34S-12-1610	**481885**	34	3.409	3.346	3.810	A1F	0	1.00	0	1/2	1 11/16	1.2	0.0175
8MX-35S-12-1610	**481886**	35	3.509	3.446	3.805	A1F	0	1.00	0	1/2	1 11/16	1.3	0.0200
8MX-36S-12-1610	**481887**	36	3.609	3.546	4.009	A1F	0	1.00	0	1/2	1 11/16	1.4	0.0227
8MX-37S-12-1610	**481888**	37	3.709	3.646	4.044	A1F	0	1.00	0	1/2	1 11/16	1.6	0.0257
8MX-38S-12-1610	**481889**	38	3.810	3.747	4.210	A1F	0	1.00	0	1/2	1 11/16	1.7	0.0290
8MX-39S-12-1610	**481890**	39	3.910	3.847	4.410	A1F	0	1.00	0	1/2	1 11/16	1.9	0.0326
8MX-40S-12-2012	**481891**	40	4.010	3.947	4.410	B1F	0	1.25	0,40	1/2	2 1/8	1.9	0.0413
8MX-41S-12-2012	**481892**	41	4.110	4.047	4.520	B1F	0	1.25	0,40	1/2	2 1/8	2.1	0.0462
8MX-42S-12-2012	**481893**	42	4.211	4.148	4.911	B1F	0	1.25	0,40	1/2	2 1/8	2.2	0.0515
8MX-45S-12-2012	**481894**	45	4.511	4.448	4.911	B1F	0	1.25	0,40	1/2	2 1/8	2.5	0.0702
8MX-48S-12-2012	**481895**	48	4.812	4.749	5.212	B1F	0	1.25	0,40	1/2	2 1/8	2.7	0.0936
8MX-50S-12-2012	**481896**	50	5.013	4.950	5.413	B1F	0	1.25	0,40	1/2	2 1/8	3.1	0.1120
8MX-53S-12-2012	**481897**	53	5.314	5.251	5.500	B1F	0	1.25	0,40	1/2	2 1/8	3.8	0.1447
8MX-56S-12-2012	**481898**	56	5.614	5.551	6.014	B1F	0	1.25	0,40	1/2	2 1/8	5.4	0.1839
8MX-60S-12-2012	**481899**	60	6.015	5.952	6.415	B1F	0	1.25	0,40	1/2	2 1/8	5.5	0.2480
8MX-63S-12-2012	**481900**	63	6.316	6.253	6.716	B2F	0	1.25	0,40	1/2	2 1/8	5.5	0.1409
8MX-67S-12-2012	**481901**	67	6.717	6.654	6.875	B2F	0	1.25	0,40	1/2	2 1/8	6.0	0.1798
8MX-71S-12-2012	**481902**	71	7.118	7.055	7.500	B2F	0	1.25	0,40	1/2	2 1/8	6.5	0.2263
8MX-75S-12-2012	**481903**	75	7.519	7.456	7.919	B2F	0	1.25	0,40	1/2	2 1/8	7.0	0.2814
8MX-80S-12-2012	**481904**	80	8.020	7.957	8.420	B2F	0	1.25	0,40	1/2	2 1/8	9.6	0.3640
8MX-90S-12-2012	**481905**	90	9.023	8.960	- - -	B2	0	1.25	0,40	1/2	2 1/8	9.4	0.5823
8MX-112S-12-2012	**481906**	112	11.229	11.166	- - -	B2	0	1.25	0,40	1/2	2 1/8	16.6	1.3980
8MX-140S-12-2012	**481907**	140	14.036	13.973	- - -	B3	0	1.25	0,40	1/2	2 1/8	17.3	1.1757
8MX-180S-12-2517	**481908**	180	18.046	17.983	- - -	B3	0	1.75	0,90	1/2	2 11/16	30.0	2.8678
8MX-224S-12-2517	**481909**	224	22.457	22.394	- - -	B3	0	1.75	0,90	1/2	2 11/16	41.2	6.2533

DODGE®

HT500 TAPER-LOCK Sprockets (Continued)

8M HT500 Sprockets

Sprocket Number	Part No.	No. Of Teeth	Diameters (In.)			Type	Dimensions (In.)			Bore Sizes		Approx. Weight (Lbs.)	Approx. WR^2 (Lb-Ft^2)
			P.D.	O.D.	Flange		E	L	M	Min.	Max		
8MX-21						**F = 1.20"**							
8MX-22S-21-1008	**481915**	22	2.206	2.143	2.606	A1F	0	0.88	0.32	1/2	1	0.4	0.0025
8MX-25S-21-1108	**481916**	25	2.506	2.443	2.906	A1F	0	0.88	0.32	1/2	1 1/8	0.6	0.0046
8MX-26S-21-1108	**481917**	26	2.607	2.544	2.906	A1F	0	0.88	0.32	1/2	1 1/8	0.6	0.0055
8MX-27S-21-1108	**481918**	27	2.707	2.644	3.207	A1F	0	0.88	0.32	1/2	1 1/8	0.7	0.0065
8MX-28S-21-1108	**481919**	28	2.807	2.744	3.207	A1F	0	0.88	0.32	1/2	1 1/8	0.9	0.0076
8MX-29S-21-1108	**481920**	29	2.907	2.844	3.090	A1F	0	0.88	0.32	1/2	1 1/8	1.0	0.0089
8MX-30S-21-1108	**481921**	30	3.008	2.945	3.408	A1F	0	0.88	0.32	1/2	1 1/8	1.1	0.0104
8MX-31S-21-1210	**481922**	31	3.108	3.045	3.328	A1F	0	1.00	0.20	1/2	1 1/4	1.3	0.0120
8MX-32S-21-1210	**481923**	32	3.208	3.145	3.608	A1F	0	1.00	0.20	1/2	1 1/4	1.4	0.0137
8MX-33S-21-1610	**481924**	33	3.308	3.245	3.566	A1F	0	1.00	0.20	1/2	1 11/16	1.5	0.0173
8MX-34S-21-1610	**481925**	34	3.409	3.346	3.810	A1F	0	1.00	0.20	1/2	1 11/16	1.6	0.0198
8MX-35S-21-1610	**481926**	35	3.509	3.446	3.805	A1F	0	1.00	0.20	1/2	1 11/16	1.6	0.0226
8MX-36S-21-1610	**481927**	36	3.609	3.546	4.009	A1F	0	1.00	0.20	1/2	1 11/16	1.8	0.0256
8MX-37S-21-1610	**481928**	37	3.709	3.646	4.044	A1F	0	1.00	0.20	1/2	1 11/16	1.8	0.0289
8MX-38S-21-1610	**481929**	38	3.810	3.747	4.210	A1F	0	1.00	0.20	1/2	1 11/16	1.9	0.0325
8MX-39S-21-1610	**481930**	39	3.910	3.847	4.410	A1F	0	1.00	0.20	1/2	1 11/16	1.9	0.0364
8MX-40S-21-2012	**481931**	40	4.010	3.947	4.410	A1F	0	1.25	0	1/2	2 1/8	2.3	0.0450
8MX-41S-21-2012	**481932**	41	4.110	4.047	4.520	A1F	0	1.25	0	1/2	2 1/8	2.3	0.0502
8MX-42S-21-2012	**481933**	42	4.211	4.148	4.911	A1F	0	1.25	0	1/2	2 1/8	2.5	0.0559
8MX-45S-21-2012	**481934**	45	4.511	4.448	4.911	A1F	0	1.25	0	1/2	2 1/8	2.9	0.0758
8MX-48S-21-2012	**481935**	48	4.812	4.749	5.212	A1F	0	1.25	0	1/2	2 1/8	3.4	0.1006
8MX-50S-21-2012	**481936**	50	5.013	4.950	5.413	A1F	0	1.25	0	1/2	2 1/8	4.0	0.1201
8MX-53S-21-2012	**481937**	53	5.314	5.251	5.500	A1F	0	1.25	0	1/2	2 1/8	4.5	0.1545
8MX-56S-21-2012	**481938**	56	5.614	5.551	6.014	A1F	0	1.25	0	1/2	2 1/8	4.9	0.1958
8MX-60S-21-2012	**481939**	60	6.015	5.952	6.415	A1F	0	1.25	0	1/2	2 1/8	6.4	0.2631
8MX-63S-21-2012	**481940**	63	6.316	6.253	6.716	B2F	0	1.25	0.05	1/2	2 1/8	7.7	0.1706
8MX-67S-21-2517	**481941**	67	6.717	6.654	6.875	B2F	0	1.75	0.55	1/2	2 11/16	8.3	0.2195
8MX-71S-21-2517	**481942**	71	7.118	7.055	7.500	B2F	0	1.75	0.55	1/2	2 11/16	8.7	0.2735
8MX-75S-21-2517	**481943**	75	7.519	7.456	7.919	B2F	0	1.75	0.55	1/2	2 11/16	9.2	0.3372
8MX-80S-21-2517	**481944**	80	8.020	7.957	8.420	B2F	0	1.75	0.55	1/2	2 11/16	9.8	0.4319
8MX-90S-21-2517	**481945**	90	9.023	8.960	- - -	B2	0	1.75	0.55	1/2	2 11/16	12.8	0.6794
8MX-112S-21-2517	**481946**	112	11.229	11.166	- - -	B2	0	1.75	0.55	1/2	2 11/16	19.4	1.5916
8MX-140S-21-2517	**481947**	140	14.036	13.973	- - -	B3	0	1.75	0.55	1/2	2 11/16	26.8	1.8107
8MX-180S-21-3020	**481948**	180	18.046	17.983	- - -	B3	0	2.00	0.80	7/8	3 1/4	36.6	4.4030
8MX-224S-21-3020	**481949**	224	22.457	22.394	- - -	B3	0	2.00	0.80	7/8	3 1/4	50.1	9.5391
8MX-36						**F = 1.86"**							
8MX-32S-36-1210	**481958**	32	3.208	3.145	3.608	A1F	0	1.00	0.86	1/2	1 1/4	1.7	0.0188
8MX-33S-36-1610	**481959**	33	3.308	3.245	3.566	A1F	0	1.00	0.86	1/2	1 11/16	1.7	0.0223
8MX-34S-36-1610	**481960**	34	3.409	3.346	3.810	A1F	0	1.00	0.86	1/2	1 11/16	1.8	0.0254
8MX-35S-36-1610	**481961**	35	3.509	3.446	3.805	A1F	0	1.00	0.86	1/2	1 11/16	1.8	0.0288
8MX-36S-36-1610	**481962**	36	3.609	3.546	4.009	A1F	0	1.00	0.86	1/2	1 11/16	2.1	0.0324
8MX-37S-36-1610	**481963**	37	3.709	3.646	4.044	A1F	0	1.00	0.86	1/2	1 11/16	2.1	0.0364
8MX-38S-36-1610	**481964**	38	3.810	3.747	4.210	A1F	0	1.00	0.86	1/2	1 11/16	2.4	0.0408
8MX-39S-36-1610	**481965**	39	3.910	3.847	4.410	A1F	0	1.00	0.86	1/2	1 11/16	2.4	0.0455
8MX-40S-36-2012	**481966**	40	4.010	3.947	4.410	A1F	0	1.25	0.61	1/2	2 1/8	2.5	0.0547
8MX-41S-36-2012	**481967**	41	4.110	4.047	4.520	A1F	0	1.25	0.61	1/2	2 1/8	2.8	0.0608
8MX-42S-36-2012	**481968**	42	4.211	4.148	4.911	A1F	0	1.25	0.61	1/2	2 1/8	3.3	0.0675
8MX-45S-36-2012	**481969**	45	4.511	4.448	4.911	A1F	0	1.25	0.61	1/2	2 1/8	3.4	0.0905
8MX-48S-36-2012	**481970**	48	4.812	4.749	5.212	A1F	0	1.25	0.61	1/2	2 1/8	5.1	0.1190

SPECIFICATION

HT500 TAPER-LOCK Sprockets (Continued)

8M HT500 Sprockets

Sprocket Number	Part No.	No. Of Teeth	Diameters (In.)			Type	Dimensions (In.)			Bore Sizes		Approx. Weight (Lbs.)	Approx. WR^2 (Lb-Ft^2)
			P.D.	O.D.	Flange		E	L	M	Min.	Max		
8MX-36						**F = 1.86"**							
8MX-50S-36-2012	**481971**	50	5.013	4.950	5.413	A1F	0	1.25	0.61	1/2	2 1/8	5.1	0.1413
8MX-53S-36-2012	**481972**	53	5.314	5.251	5.500	A1F	0	1.25	0.61	1/2	2 1/8	6.0	0.1804
8MX-56S-36-2012	**481973**	56	5.614	5.551	6.014	A1F	0	1.25	0.61	1/2	2 1/8	6.6	0.2271
8MX-60S-36-2517	**481974**	60	6.015	5.952	6.415	A1F	0	1.75	0.11	1/2	2 11/16	8.0	0.3018
8MX-63S-36-2517	**481975**	63	6.316	6.253	6.716	A1F	0	1.75	0.11	1/2	2 11/16	9.3	0.3698
8MX-67S-36-2517	**481976**	67	6.717	6.654	6.875	A2F	0	1.75	0.11	1/2	2 11/16	10.0	0.2896
8MX-71S-36-2517	**481977**	71	7.118	7.055	7.500	A2F	0	1.75	0.11	1/2	2 11/16	12.0	0.3579
8MX-75S-36-2517	**481978**	75	7.519	7.456	7.919	A2F	0	1.75	0.11	1/2	2 11/16	13.3	0.4378
8MX-80S-36-3020	**481979**	80	8.020	7.957	8.420	B2F	0	2.00	0.14	7/8	3 1/4	15.3	0.5851
8MX-90S-36-3020	**481980**	90	9.023	8.960	- - -	B2	0	2.00	0.14	7/8	3 1/4	20.9	0.8894
8MX-112S-36-3020	**481981**	112	11.229	11.166	- - -	B2	0	2.00	0.14	7/8	3 1/4	29.7	1.9883
8MX-140S-36-3020	**481982**	140	14.036	13.973	- - -	B3	0	2.00	0.14	7/8	3 1/4	39.3	2.8686
8MX-180S-36-3020	**481983**	180	18.046	17.983	- - -	B3	0	2.00	0.14	7/8	3 1/4	48.9	6.9025
8MX-224S-36-3525	**481984**	224	22.457	22.394	- - -	B3	0	2.25	0.64	1 3/16	3 15/16	92.2	14.9010
8MX-62						**F = 2.91"**							
8MX-34S-62-1610	**481996**	34	3.409	3.346	3.810	A1F	0	1.00	1.91	1/2	1 11/16	5.0	0.0380
8MX-36S-62-1610	**481997**	36	3.609	3.546	4.009	A1F	0	1.00	1.91	1/2	1 11/16	5.3	0.0484
8MX-38S-62-1610	**481998**	38	3.812	3.747	4.210	A1F	0	1.00	1.91	1/2	1 11/16	5.6	0.0607
8MX-40S-62-2012	**481999**	40	4.010	3.947	4.410	A1F	0	1.25	1.66	1/2	2 1/8	5.9	0.0749
8MX-42S-62-2012	**482000**	42	4.211	4.148	4.911	A1F	0	1.25	1.66	1/2	2 1/8	6.1	0.0919
8MX-45S-62-2012	**482001**	45	4.511	4.448	4.911	A1F	0	1.25	1.66	1/2	2 1/8	6.5	0.1226
8MX-48S-62-2517	**482002**	48	4.812	4.749	5.212	A1F	0	1.75	1.16	1/2	2 11/16	6.6	0.1594
8MX-50S-62-2517	**482003**	50	5.013	4.950	5.413	A1F	0	1.75	1.16	1/2	2 11/16	6.7	0.1891
8MX-53S-62-2517	**482004**	53	5.314	5.251	5.500	A1F	0	1.75	1.16	1/2	2 11/16	6.9	0.2412
8MX-56S-62-2517	**482005**	56	5.614	5.551	6.014	A1F	0	1.75	1.16	1/2	2 11/16	7.2	0.3034
8MX-60S-62-3020	**482006**	60	6.015	5.952	6.415	A1F	0	2.00	0.91	7/8	3 1/4	8.9	0.4298
8MX-63S-62-3020	**482007**	63	6.316	6.253	6.716	A1F	0	2.00	0.91	7/8	3 1/4	10.3	0.5261
8MX-67S-62-3020	**482008**	67	6.717	6.654	6.875	A1F	0	2.00	0.91	7/8	3 1/4	11.0	0.6781
8MX-71S-62-3020	**482009**	71	7.118	7.055	7.500	A1F	0	2.00	0.91	7/8	3 1/4	13.5	0.8605
8MX-75S-62-3020	**482010**	75	7.519	7.456	7.919	A1F	0	2.00	0.91	7/8	3 1/4	15.4	1.0770
8MX-80S-62-3020	**482011**	80	8.020	7.957	8.420	A1F	0	2.00	0.91	7/8	3 1/4	23.0	1.4016
8MX-90S-62-3020	**482012**	90	9.023	8.960	- - -	A2	0	2.00	0.91	7/8	3 1/4	32.7	1.2239
8MX-112S-62-3020	**482013**	112	11.229	11.166	- - -	A2	0	2.00	0.91	7/8	3 1/4	38.9	2.6610
8MX-140S-62-3525	**482014**	140	14.036	13.973	- - -	A2	0	2.25	0.66	1 3/16	3 15/16	54.5	6.0574
8MX-180S-62-3525	**482015**	180	18.046	17.983	- - -	A3	0	2.25	0.66	1 3/16	3 15/16	68.2	10.995
8MX-224S-62-3525	**482016**	224	22.457	22.394	- - -	A3	0	2.25	0.66	1 3/16	3 15/16	92.3	23.619

SPECIFICATION

HT500 TAPER-LOCK Sprockets

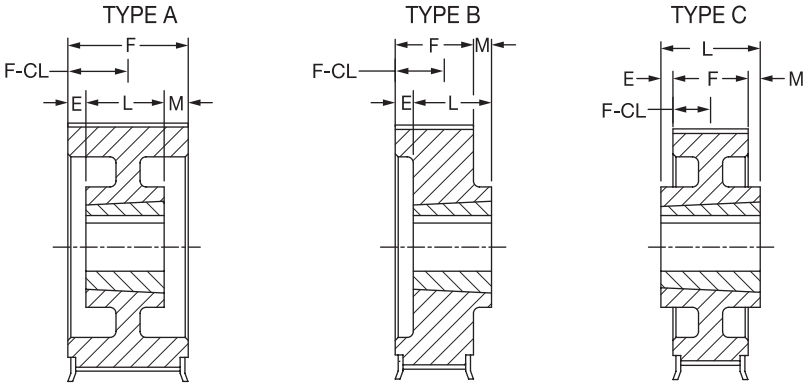

TYPE AF TYPE BF TYPE CF

1 = Block 2 = Web 3 = Arms

14M HT500 Sprockets

The letter "F" in column "Type" indicates that Sprocket has flanges

Sprocket Number	Part No.	No. Of Teeth	Diameters (In.)			Type	Dimensions (In.)			Bore Sizes		Approx. Weight (Lbs.)	Approx. WR^2 (Lb-Ft^2)
			P.D.	O.D.	Flange		E	L	M	Min.	Max		
14MX-20						**F = 1.36"**							
14MX-28S-20-2012	**482017**	28	4.912	4.802	5.402	A1F	0	1.25	0.11	1/2	2 1/8	3.9	0.0922
14MX-29S-20-2012	**482018**	29	5.088	4.978	5.763	A1F	0	1.25	0.11	1/2	2 1/8	4.5	0.1082
14MX-30S-20-2012	**482019**	30	5.263	5.153	5.763	A1F	0	1.25	0.11	1/2	2 1/8	4.8	0.1261
14MX-31S-20-2012	**482020**	31	5.439	5.329	6.114	A1F	0	1.25	0.11	1/2	2 1/8	5.5	0.1462
14MX-32S-20-2012	**482021**	32	5.614	5.504	6.114	A1F	0	1.25	0.11	1/2	2 1/8	5.9	0.1686
14MX-33S-20-2012	**482022**	33	5.790	5.680	6.465	A1F	0	1.25	0.11	1/2	2 1/8	6.3	0.1934
14MX-34S-20-2012	**482023**	34	5.965	5.855	6.465	A1F	0	1.25	0.11	1/2	2 1/8	6.9	0.2209
14MX-35S-20-2012	**482024**	35	6.141	6.031	6.816	A1F	0	1.25	0.11	1/2	2 1/8	7.3	0.2512
14MX-36S-20-2517	**482025**	36	6.316	6.206	6.816	B1F	0	1.75	0.39	1/2	2 11/16	7.6	0.2836
14MX-37S-20-2517	**482026**	37	6.492	6.382	7.167	B1F	0	1.75	0.39	1/2	2 11/16	8.2	0.3200
14MX-38S-20-2517	**482027**	38	6.667	6.557	7.167	B1F	0	1.75	0.39	1/2	2 11/16	8.8	0.3599
14MX-39S-20-2517	**482028**	39	6.842	6.732	7.518	B1F	0	1.75	0.39	1/2	2 11/16	9.8	0.4033
14MX-40S-20-2517	**482029**	40	7.018	6.908	7.518	B1F	0	1.75	0.39	1/2	2 11/16	10.1	0.4505
14MX-43S-20-2517	**482030**	43	7.544	7.434	8.044	B1F	0	1.75	0.39	1/2	2 11/16	11.7	0.6172
14MX-45S-20-3020	**482031**	45	7.895	7.785	8.395	B1F	0	2.00	0.64	7/8	3 1/4	13.5	0.9146
14MX-48S-20-3020	**482032**	48	8.421	8.311	8.941	B1F	0	2.00	0.64	7/8	3 1/4	16.4	1.2146
14MX-50S-20-3020	**482033**	50	8.772	8.662	9.292	B1F	0	2.00	0.64	7/8	3 1/4	18.2	1.4519
14MX-53S-20-3020	**482034**	53	9.299	9.189	9.688	B1F	0	2.00	0.64	7/8	3 1/4	20.5	1.8705
14MX-56S-20-3525	**482035**	56	9.825	9.715	10.355	B1F	0	2.50	1.14	1 3/16	3 15/16	23.1	2.3648
14MX-60S-20-3525	**482036**	60	10.527	10.417	11.067	B1F	0	2.50	1.14	1 3/16	3 15/16	27.4	3.1852
14MX-63S-20-3525	**482037**	63	11.053	10.943	11.593	B1F	0	2.50	1.14	1 3/16	3 15/16	30.2	3.9274
14MX-67S-20-3525	**482038**	67	11.755	11.645	12.500	B1F	0	2.50	1.14	1 3/16	3 15/16	31.2	5.1094
14MX-71S-20-3525	**482039**	71	12.457	12.347	13.066	B2F	0	2.50	1.14	1 3/16	3 15/16	32.5	2.6422
14MX-75S-20-3525	**482040**	75	13.158	13.048	13.731	B2F	0	2.50	1.14	1 3/16	3 15/16	36.1	3.2558
14MX-80S-20-3525	**482041**	80	14.036	13.926	14.620	B2F	0	2.50	1.14	1 3/16	3 15/16	38.7	4.1694
14MX-90S-20-3525	**482042**	90	15.790	15.680	- - -	B2	0	2.50	1.14	1 3/16	3 15/16	41.3	6.5536
14MX-112S-20-3525	**482043**	112	19.650	19.540	- - -	B3	0	2.50	1.14	1 3/16	3 15/16	59.6	8.7315
14MX-126S-20-3525	**482044**	126	22.106	21.996	- - -	B3	0	2.50	1.14	1 3/16	3 15/16	58.1	13.253
14MX-140S-20-3525	**482045**	140	24.562	24.452	- - -	B3	0	2.50	1.00	1 3/16	3 15/16	94.8	19.265
14MX-154S-20-3525	**482046**	154	27.019	26.909	- - -	B3	0	2.50	1.14	1 3/16	3 15/16	73.4	27.038
14MX-168S-20-3525	**482047**	168	29.475	29.365	- - -	B3	0	2.50	1.00	1 3/16	3 15/16	99.5	36.864
14MX-180S-20-3525	**482048**	180	31.580	31.470	- - -	B3	0	2.50	1.00	1 3/16	3 15/16	107.3	47.142
14MX-200S-20-3525	**482049**	200	35.089	34.979	- - -	B3	0	2.50	1.00	1 3/16	3 15/16	119.0	68.655
14MX-224S-20-4030	**482050**	224	39.300	39.190	- - -	B3	0	3.00	1.50	1 7/16	4 7/16	150.2	102.931
14MX-37						**F = 2.06"**							
14MX-28S-37-2012	**482052**	28	4.912	4.802	5.402	A1F	0	1.25	0.81	1/2	2 1/8	4.2	0.1180
14MX-29S-37-2517	**482053**	29	5.088	4.978	5.763	A1F	0	1.75	0.31	1/2	2 11/16	4.7	0.1367
14MX-30S-37-2517	**482054**	30	5.263	5.153	5.763	A1F	0	1.75	0.31	1/2	2 11/16	5.0	0.1587
14MX-31S-37-2517	**482055**	31	5.439	5.329	6.114	A1F	0	1.75	0.31	1/2	2 11/16	6.0	0.1831
14MX-32S-37-2517	**482056**	32	5.614	5.504	6.114	A1F	0	1.75	0.31	1/2	2 11/16	7.2	0.2102
14MX-33S-37-2517	**482057**	33	5.790	5.680	6.465	A1F	0	1.75	0.31	1/2	2 11/16	7.5	0.2401

SPECIFICATION

HT500 TAPER-LOCK Sprockets (Continued)

14M HT500 Sprockets

Sprocket Number	Part No.	No. Of Teeth	Diameters (In.)			Type	Dimensions (In.)			Bore Sizes		Approx. Weight (Lbs.)	Approx. WR^2 (Lb-Ft^2)
			P.D.	O.D.	Flange		E	L	M	Min.	Max		
14MX-37						**F = 2.06"**							
14MX-34S-37-2517	**482058**	34	5.965	5.855	6.465	A1F	0	1.75	0.31	1/2	2 11/16	7.8	0.2730
14MX-35S-37-2517	**482059**	35	6.141	6.031	6.816	A1F	0	1.75	0.31	1/2	2 11/16	8.3	0.3091
14MX-36S-37-2517	**482060**	36	6.316	6.206	6.816	A1F	0	1.75	0.31	1/2	2 11/16	8.8	0.3487
14MX-37S-37-2517	**482061**	37	6.492	6.382	7.167	A1F	0	1.75	0.31	1/2	2 11/16	9.3	0.3919
14MX-38S-37-3020	**482062**	38	6.667	6.557	7.167	A1F	0	2.00	0.06	7/8	3 1/4	10.8	0.5016
14MX-39S-37-3020	**482063**	39	6.842	6.732	7.518	A1F	0	2.00	0.06	7/8	3 1/4	11.9	0.5620
14MX-40S-37-3020	**482064**	40	7.018	6.908	7.518	A1F	0	2.00	0.06	7/8	3 1/4	12.2	0.6277
14MX-43S-37-3020	**482065**	43	7.544	7.434	8.044	A1F	0	2.00	0.06	7/8	3 1/4	12.5	0.8589
14MX-45S-37-3020	**482066**	45	7.895	7.785	8.395	A1F	0	2.00	0.06	7/8	3 1/4	15.8	1.0447
14MX-48S-37-3020	**482067**	48	8.421	8.311	8.941	A1F	0	2.00	0.06	7/8	3 1/4	18.7	1.3774
14MX-50S-37-3020	**482068**	50	8.772	8.662	9.292	A1F	0	2.00	0.06	7/8	3 1/4	21.1	1.6394
14MX-53S-37-3020	**482069**	53	9.299	9.189	9.688	A1F	0	2.00	0.06	7/8	3 1/4	24.7	2.0997
14MX-56S-37-3525	**482070**	56	9.825	9.715	10.355	B1F	0	2.50	0.44	1 3/16	3 15/16	28.2	2.6416
14MX-60S-37-3525	**482071**	60	10.527	10.417	11.067	B1F	0	2.50	0.44	1 3/16	3 15/16	32.2	3.5355
14MX-63S-37-3525	**482072**	63	11.053	10.943	11.593	B1F	0	2.50	0.44	1 3/16	3 15/16	42.8	4.3411
14MX-67S-37-3525	**482073**	67	11.755	11.645	12.500	B1F	0	2.50	0.44	1 3/16	3 15/16	43.5	5.6192
14MX-71S-37-3525	**482074**	71	12.457	12.347	13.066	B2F	0	2.50	0.44	1 3/16	3 15/16	44.1	3.5191
14MX-75S-37-3525	**482075**	75	13.158	13.048	13.731	B2F	0	2.50	0.44	1 3/16	3 15/16	45.5	4.3017
14MX-80S-37-3525	**482076**	80	14.036	13.926	14.620	B2F	0	2.50	0.44	1 3/16	3 15/16	48.7	5.4564
14MX-90S-37-3525	**482077**	90	15.790	15.680	- - -	B2	0	2.50	0.44	1 3/16	3 15/16	53.3	8.4295
14MX-112S-37-3525	**482078**	112	19.650	19.540	- - -	B3	0	2.50	0.44	1 3/16	3 15/16	87.0	14.200
14MX-126S-37-3525	**482079**	126	22.106	21.996	- - -	B3	0	2.50	0.44	1 3/16	3 15/16	76.3	21.539
14MX-140S-37-3525	**482080**	140	24.562	24.452	- - -	B3	0	2.50	0.44	1 3/16	3 15/16	100.2	31.267
14MX-154S-37-3525	**482081**	154	27.019	26.909	- - -	B3	0	2.50	0.44	1 3/16	3 15/16	100.2	43.807
14MX-168S-37-4030	**482082**	168	29.475	29.365	- - -	B3	0	3.00	0.94	1 7/16	4 7/16	179.0	59.582
14MX-180S-37-4030	**482083**	180	31.580	31.470	- - -	B3	0	3.00	0.94	1 7/16	4 7/16	182.3	76.076
14MX-200S-37-4030	**482084**	200	35.089	34.979	- - -	B3	0	3.00	0.94	1 7/16	4 7/16	185.4	100.527
14MX-224S-37-4030	**482085**	224	39.300	39.190	- - -	B3	0	3.00	0.94	1 7/16	4 7/16	229.1	165.266
14MX-68						**F = 3.33"**							
14MX-28S-68-2517	**482096**	28	4.912	4.802	5.402	A1F	0	1.75	1.58	1/2	2 11/16	13.5	0.1804
14MX-29S-68-2517	**482097**	29	5.088	4.978	5.763	A1F	0	1.75	1.58	1/2	2 11/16	13.8	0.2101
14MX-30S-68-2517	**482098**	30	5.263	5.153	5.763	A1F	0	1.75	1.58	1/2	2 11/16	14.0	0.2433
14MX-31S-68-2517	**482099**	31	5.439	5.329	6.114	A1F	0	1.75	1.58	1/2	2 11/16	14.3	0.2802
14MX-32S-68-2517	**482100**	32	5.614	5.504	6.114	A1F	0	1.75	1.58	1/2	2 11/16	14.6	0.3211
14MX-33S-68-2517	**482101**	33	5.790	5.680	6.465	A1F	0	1.75	1.58	1/2	2 11/16	14.9	0.3663
14MX-34S-68-2517	**482102**	34	5.965	5.855	6.465	A1F	0	1.75	1.58	1/2	2 11/16	15.2	0.4160
14MX-35S-68-3020	**482103**	35	6.141	6.031	6.816	A1F	0	2.00	1.33	7/8	3 1/4	15.5	0.4692
14MX-36S-68-3020	**482104**	36	6.316	6.206	6.816	A1F	0	2.00	1.33	7/8	3 1/4	15.8	0.5285
14MX-37S-68-3020	**482105**	37	6.492	6.382	7.167	A1F	0	2.00	1.33	7/8	3 1/4	16.1	0.5932
14MX-38S-68-3020	**482106**	38	6.667	6.557	7.167	A1F	0	2.00	1.33	7/8	3 1/4	16.4	0.6635
14MX-39S-68-3020	**482107**	39	6.842	6.732	7.518	A1F	0	2.00	1.33	7/8	3 1/4	16.7	0.7400
14MX-40S-68-3020	**482108**	40	7.018	6.908	7.518	A1F	0	2.00	1.33	7/8	3 1/4	17.0	0.8239
14MX-43S-68-3020	**482109**	43	7.544	7.434	8.044	A1F	0	2.00	1.33	7/8	3 1/4	17.2	1.1187
14MX-45S-68-3020	**482110**	45	7.895	7.785	8.395	A1F	0	2.00	1.33	7/8	3 1/4	20.4	1.3552
14MX-48S-68-3525	**482111**	48	8.421	8.311	8.941	A1F	0	2.50	0.83	1 3/16	3 15/16	24.6	1.7697
14MX-50S-68-3525	**482112**	50	8.772	8.662	9.292	A1F	0	2.50	0.83	1 3/16	3 15/16	29.4	2.1032
14MX-53S-68-3525	**482113**	53	9.299	9.189	9.688	A1F	0	2.50	0.83	1 3/16	3 15/16	35.7	2.6902
14MX-56S-68-3525	**482114**	56	9.825	9.715	10.355	A1F	0	2.50	0.83	1 3/16	3 15/16	39.9	3.3944
14MX-60S-68-3525	**482115**	60	10.527	10.417	11.067	A1F	0	2.50	0.83	1 3/16	3 15/16	50.6	4.5427
14MX-63S-68-3525	**482116**	63	11.053	10.943	11.593	A1F	0	2.50	0.83	1 3/16	3 15/16	58.0	5.5830
14MX-67S-68-3525	**482117**	67	11.755	11.645	12.500	A2F	0	2.50	0.83	1 3/16	3 15/16	60.0	4.4150
14MX-71S-68-3525	**482118**	71	12.457	12.347	13.066	A2F	0	2.50	0.83	1 3/16	3 15/16	63.3	5.4244
14MX-75S-68-3525	**482119**	75	13.158	13.048	13.731	A2F	0	2.50	0.83	1 3/16	3 15/16	68.6	6.5958

SPECIFICATION

Sprocket Number	Part No.	No. Of Teeth	Diameters (In.)			Type	Dimensions (In.)			Bore Sizes		Approx. Weight (Lbs.)	Approx. WR^2 (Lb-Ft^2)
			P.D.	O.D.	Flange		E	L	M	Min.	Max		
14MX-68						**F = 3.33"**							
14MX-80S-68-3525	**482120**	80	14.036	13.926	14.620	A2F	0	2.50	0.83	1 3/16	3 15/16	76.3	8.3123
14MX-90S-68-4030	**482121**	90	15.790	15.680	- - -	A2	0	3.00	0.33	1 7/16	4 7/16	82.6	12.782
14MX-112S-68-4030	**482122**	112	19.650	19.540	- - -	A3	0	3.00	0.33	1 7/16	4 7/16	100.4	23.778
14MX-140S-68-4030	**482123**	140	24.562	24.452	- - -	A3	0	3.00	0.33	1 7/16	4 7/16	190.0	52.002
14MX-168S-68-4535	**482124**	168	29.475	29.365	- - -	B3	0	3.50	0.17	1 15/16	4 15/16	239.1	98.636
14MX-180S-68-4535	**482125**	180	31.580	31.470	- - -	B3	0	3.50	0.17	1 15/16	4 15/16	250.6	125.733
14MX-200S-68-4535	**482126**	200	35.089	34.979	- - -	B3	0	3.50	0.17	1 15/16	4 15/16	262.5	182.222
14MX-224S-68-5040	**482127**	224	39.300	39.190	- - -	B3	0	4.00	0.67	2 7/16	5	350.0	271.707
14MX-90						**F = 4.20"**							
14MX-35S-90-3020	**482141**	35	6.141	6.031	6.816	A1F	0	2.00	2.20	7/8	3 1/4	22.9	0.5884
14MX-36S-90-3020	**482142**	36	6.316	6.206	6.816	A1F	0	2.00	2.20	7/8	3 1/4	23.1	0.6633
14MX-37S-90-3020	**482143**	37	6.492	6.382	7.167	A1F	0	2.00	2.20	7/8	3 1/4	23.4	0.7449
14MX-38S-90-3020	**482144**	38	6.667	6.557	7.167	A1F	0	2.00	2.20	7/8	3 1/4	23.7	0.8338
14MX-39S-90-3020	**482145**	39	6.842	6.732	7.518	A1F	0	2.00	2.20	7/8	3 1/4	24.0	0.9303
14MX-40S-90-3020	**482146**	40	7.018	6.908	7.518	A1F	0	2.00	2.20	7/8	3 1/4	24.3	1.0349
14MX-43S-90-3525	**482147**	43	7.544	7.434	8.044	A1F	0	2.50	1.70	1 3/16	3 15/16	24.7	1.3910
14MX-45S-90-3525	**482148**	45	7.895	7.785	8.395	A1F	0	2.50	1.70	1 3/16	3 15/16	27.3	1.6846
14MX-48S-90-3525	**482149**	48	8.421	8.311	8.941	A1F	0	2.50	1.70	1 3/16	3 15/16	29.3	2.2089
14MX-50S-90-3525	**482150**	50	8.772	8.662	9.292	A1F	0	2.50	1.70	1 3/16	3 15/16	33.4	2.6208
14MX-53S-90-3525	**482151**	53	9.299	9.189	9.688	A1F	0	2.50	1.70	1 3/16	3 15/16	42.1	3.3442
14MX-56S-90-4030	**482152**	56	9.825	9.715	10.355	A1F	0	3.00	1.20	1 7/16	4 7/16	46.8	4.1952
14MX-60S-90-4030	**482153**	60	10.527	10.417	11.067	A1F	0	3.00	1.20	1 7/16	4 7/16	50.4	5.6011
14MX-63S-90-4030	**482154**	63	11.053	10.943	11.593	A1F	0	3.00	1.20	1 7/16	4 7/16	64.6	6.8708
14MX-67S-90-4030	**482155**	67	11.755	11.645	12.500	A1F	0	3.00	1.20	1 7/16	4 7/16	70.0	8.8919
14MX-71S-90-4030	**482156**	71	12.457	12.347	13.066	A1F	0	3.00	1.20	1 7/16	4 7/16	85.0	11.339
14MX-75S-90-4030	**482157**	75	13.158	13.048	13.731	A2F	0	3.00	1.20	1 7/16	4 7/16	86.7	14.669
14MX-80S-90-4030	**482158**	80	14.036	13.926	14.620	A2F	0	3.00	1.20	1 7/16	4 7/16	88.0	13.800
14MX-90S-90-4030	**482159**	90	15.790	15.680	- - -	A2	0	3.00	1.20	1 7/16	4 7/16	124.2	16.521
14MX-112S-90-4535	**482160**	112	19.650	19.540	- - -	A3	0	3.50	0.70	1 15/16	4 15/16	197.9	30.460
14MX-140S-90-5040	**482161**	140	24.562	24.452	- - -	A3	0	4.00	0.20	2 7/16	5	240.0	66.242
14MX-168S-90-6050	**482162**	168	29.475	29.365	- - -	B3	0	5.00	0.80	4 7/16	6	327.3	125.362
14MX-180S-90-6050	**482163**	180	31.580	31.470	- - -	B3	0	5.00	0.80	4 7/16	6	335.9	159.541
14MX-200S-90-6050	**482164**	200	35.089	34.979	- - -	B3	0	5.00	0.80	4 7/16	6	344.5	230.792
14MX-224S-90-6050	**482165**	224	39.300	39.190	- - -	B3	0	5.00	0.80	4 7/16	6	589.0	343.707
14MX-125						**F = 5.61"**							
14MX-50S-125-4535	**482182**	50	8.772	8.662	9.292	A1F	0	3.50	2.11	1 15/16	4 15/16	39.4	3.4090
14MX-52S-125-4535	**482183**	52	9.123	9.013	9.687	A1F	0	3.50	2.11	1 15/16	4 15/16	48.2	4.0199
14MX-53S-125-4535	**482184**	53	9.299	9.189	9.688	A1F	0	3.50	2.11	1 15/16	4 15/16	50.1	4.3540
14MX-56S-125-4535	**482185**	56	9.825	9.715	10.355	A1F	0	3.50	2.11	1 15/16	4 15/16	52.6	5.4811
14MX-60S-125-4535	**482186**	60	10.527	10.417	11.067	A1F	0	3.50	2.11	1 15/16	4 15/16	63.3	5.8084
14MX-63S-125-4535	**482187**	63	11.053	10.943	11.593	A1F	0	3.50	2.11	1 15/16	4 15/16	77.2	8.9504
14MX-67S-125-4535	**482188**	67	11.755	11.645	12.500	A1F	0	3.50	2.11	1 15/16	4 15/16	93.8	11.555
14MX-71S-125-5040	**482189**	71	12.457	12.347	13.066	A1F	0	4.00	1.61	2 7/16	5	113.2	14.674
14MX-75S-125-5040	**482190**	75	13.158	13.048	13.731	A1F	0	4.00	1.61	2 7/16	5	132.8	18.431
14MX-80S-125-5040	**482191**	80	14.036	13.926	14.620	A1F	0	4.00	1.61	2 7/16	5	137.0	24.109
14MX-90S-125-5040	**482192**	90	15.790	15.680	- - -	A2	0	4.00	1.61	2 7/16	5	141.8	23.571
14MX-112S-125-6050	**482193**	112	19.650	19.540	- - -	A2	0	5.00	0.61	4 7/16	6	210.6	51.582
14MX-140S-125-6050	**482194**	140	24.562	24.452	- - -	A2	0	5.00	0.61	4 7/16	6	270.3	114.827
14MX-168S-125-7060	**482195**	168	29.475	29.365	- - -	B3	0	6.00	0.39	4 15/16	7	345.2	168.072
14MX-180S-125-7060	**482196**	180	31.580	31.470	- - -	B3	0	6.00	0.39	4 15/16	7	365.2	213.396
14MX-200S-125-7060	**482197**	200	35.089	34.979	- - -	B3	0	6.00	0.39	4 15/16	7	373.5	307.825
14MX-224S-125-7060	**482198**	224	39.300	39.190	- - -	B3	0	6.00	0.39	4 15/16	7	482.3	457.347

SPECIFICATION

HT500 MPB Sprockets

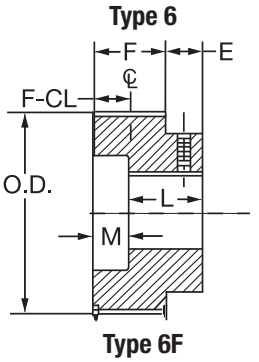

The letter "F" shown with type 6F indicates that Sprocket has flanges

8MX Sprockets

Sprocket Number	Part No.	No. Of Teeth	Diameters (In.)			Dimensions (In.)			Bore Sizes		Approx. Weight (Lbs.)	Approx. WR^2 (Lb-Ft^2)
			P.D.	O.D.	Flange	E	L	M	Min.	Max		
8MX-12					**F = .85"**						**Type 6F**	
8MX-22S-12-MPB	**481870**	22	2.206	2.143	2.606	0	1.31	0.46	0.50	1.00	0.9	0.0020
8MX-25S-12-MPB	**481871**	25	2.506	2.443	2.906	0	1.31	0.46	0.50	1.50	1.0	0.0041
8MX-28S-12-MPB	**481872**	28	2.807	2.744	3.207	0	1.31	0.46	0.50	1.75	1.4	0.0070
8MX-30S-12-MPB	**481873**	30	3.008	2.945	3.408	0	1.42	0.57	0.27	1.13	1.6	0.0088
8MX-32S-12-MPB	**481874**	32	3.208	3.145	3.608	0	1.42	0.57	0.50	2.00	1.7	0.0130
8MX-21					**F = 1.20"**						**Type 6F**	
8MX-22S-21-MPB	**481910**	22	2.206	2.143	2.606	0	1.65	0.45	0.50	1.19	1.1	0.0025
8MX-25S-21-MPB	**481911**	25	2.506	2.443	2.906	0	1.65	0.45	0.50	1.50	1.4	0.0048
8MX-28S-21-MPB	**481912**	28	2.807	2.744	3.207	0	1.65	0.45	0.50	1.75	1.8	0.0081
8MX-30S-21-MPB	**481913**	30	3.008	2.945	3.408	0	1.77	0.57	0.50	1.81	2.2	0.0112
8MX-32S-21-MPB	**481914**	32	3.208	3.145	3.608	0	1.77	0.57	0.50	2.00	2.5	0.0149
8MX-36					**F = 1.86"**						**Type 6F**	
8MX-22S-36-MPB	**481950**	22	2.206	2.143	2.606	0	2.44	0.58	0.50	1.19	1.0	0.0036
8MX-25S-36-MPB	**481951**	25	2.506	2.443	2.906	0	2.44	0.58	0.50	1.50	1.3	0.0066
8MX-28S-36-MPB	**481952**	28	2.807	2.744	3.207	0	2.44	0.58	0.50	1.75	1.5	0.0108
8MX-30S-36-MPB	**481953**	30	3.008	2.945	3.408	0	2.44	0.58	0.50	1.81	1.7	0.0147
8MX-32S-36-MPB	**481954**	32	3.208	3.145	3.608	0	2.44	0.58	0.50	2.00	3.9	0.0193
8MX-34S-36-MPB	**481955**	34	3.409	3.346	3.81	0	2.45	0.59	0.50	2.13	4.3	0.0269
8MX-36S-36-MPB	**481956**	36	3.609	3.546	4.009	0	2.51	0.65	0.50	2.31	4.3	0.0344
8MX-38S-36-MPB	**481957**	38	3.810	3.747	4.210	0	2.51	0.65	0.50	2.44	4.4	0.0434
8MX-62					**F = 2.91"**						**Type 6F**	
8MX-22S-62-MPB	**481985**	22	2.206	2.143	2.606	0	3.56	0.65	1.00	1.19	3.2	0.0059
8MX-25S-62-MPB	**481986**	25	2.506	2.443	2.906	0	3.56	0.65	1.00	1.50	3.3	0.0103
8MX-28S-62-MPB	**481987**	28	2.807	2.744	3.207	0	3.56	0.65	1.00	1.75	3.5	0.0168
8MX-30S-62-MPB	**481988**	30	3.008	2.945	3.408	0	3.50	0.59	1.00	1.81	4.0	0.0226
8MX-32S-62-MPB	**481989**	32	3.208	3.145	3.608	0	3.50	0.59	1.00	2.00	5.0	0.0297
8MX-34S-62-MPB	**481990**	34	3.409	3.346	3.81	0	3.50	0.59	1.00	2.13	5.7	0.0384
8MX-36S-62-MPB	**481991**	36	3.609	3.546	4.009	0	3.56	0.65	1.00	2.31	6.6	0.0488
8MX-38S-62-MPB	**481992**	38	3.812	3.747	4.210	0	3.56	0.65	1.00	2.44	7.4	0.0611
8MX-40S-62-MPB	**481993**	40	4.010	3.947	4.410	0	3.63	0.72	1.00	2.56	8.4	0.0757
8MX-42S-62-MPB	**481994**	42	4.211	4.148	4.911	0	3.63	0.72	1.00	2.75	9.6	0.0927
8MX-45S-62-MPB	**481995**	45	4.511	4.448	4.911	0	3.63	0.72	1.00	2.75	10.8	0.1235

SPECIFICATION

HT500 MPB Sprockets

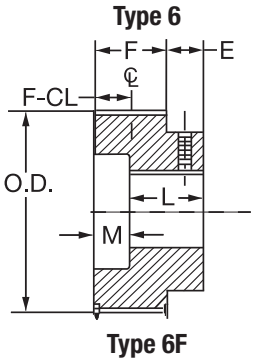

The letter "F" shown with type 6F indicates that Sprocket has flanges

14MX Sprockets

Sprocket Number	Part No.	No. Of Teeth	Diameters (In.)			Dimensions (In.)			Bore Sizes		Approx. Weight (Lbs.)	Approx. WR^2 (Lb-Ft^2)
			P.D.	O.D.	Flange	E	L	M	Min.	Max		
14MX-37					**F = 2.06"**						**Type 6F**	
14MX-28S-37-MPB	**482051**	28	4.912	4.802		0	2.86	0.80	1.00	2.94	11.70	0.1272
14MX-68					**F = 3.33"**						**Type 6F**	
14MX-28S-68-MPB	**482089**	28	4.912	4.802	5.402	0	4.13	0.80	1.00	2.94	13.4	0.1796
14MX-29S-68-MPB	**482090**	29	5.088	4.978	5.763	0	4.13	0.80	1.00	3.19	14.5	0.2081
14MX-30S-68-MPB	**482091**	30	5.263	5.153	5.763	0	4.13	0.80	1.00	3.19	15.7	0.2415
14MX-31S-68-MPB	**482092**	31	5.439	5.329	6.114	0	4.13	0.80	1.00	3.44	16.8	0.2768
14MX-32S-68-MPB	**482093**	32	5.614	5.504	6.114	0	4.13	0.80	1.00	3.44	18.0	0.3178
14MX-33S-68-MPB	**482094**	33	5.790	5.680	6.465	0	4.33	1.00	1.00	3.50	19.5	0.3626
14MX-34S-68-MPB	**482095**	34	5.965	5.855	6.465	0	4.33	1.00	1.00	3.50	21.1	0.4122
14MX-90					**F = 4.20"**						**Type 6F**	
14MX-28S-90-MPB	**482128**	28	4.912	4.802	5.402	0	5.14	0.94	1.50	2.94	17.4	0.2309
14MX-29S-90-MPB	**482129**	29	5.088	4.978	5.763	0	5.00	0.80	1.50	3.19	18.9	0.2684
14MX-30S-90-MPB	**482130**	30	5.263	5.153	5.763	0	5.00	0.80	1.50	3.19	20.3	0.3102
14MX-31S-90-MPB	**482131**	31	5.439	5.329	6.114	0	5.00	0.80	1.50	3.44	21.8	0.3566
14MX-32S-90-MPB	**482132**	32	5.614	5.504	6.114	0	5.00	0.80	1.50	3.44	23.2	0.4080
14MX-33S-90-MPB	**482133**	33	5.790	5.680	6.465	0	5.20	1.00	1.50	3.50	25.2	0.4648
14MX-34S-90-MPB	**482134**	34	5.965	5.855	6.465	0	5.20	1.00	1.50	3.50	27.2	0.5272
14MX-35S-90-MPB	**482135**	35	6.141	6.031	6.816	0	5.20	1.00	1.50	3.81	28.7	0.5956
14MX-36S-90-MPB	**482136**	36	6.316	6.206	6.816	0	5.20	1.00	1.50	3.81	30.3	0.6704
14MX-37S-90-MPB	**482137**	37	6.492	6.382	7.167	0	5.20	1.00	1.50	4.13	32.1	0.7521
14MX-38S-90-MPB	**482138**	38	6.667	6.557	7.167	0	5.20	1.00	1.50	4.13	33.9	0.8410
14MX-39S-90-MPB	**482139**	39	6.842	6.732	7.518	0	5.20	1.00	1.50	4.38	35.8	0.9375
14MX-40S-90-MPB	**482140**	40	7.018	6.908	6.518	0	5.20	1.00	1.50	4.38	37.7	1.0421
14MX-125					**F = 5.61"**						**Type 6F**	
14MX-28S-125-MPB	**482166**	28	4.912	4.802	5.402	0	6.50	0.89	1.50	2.94	22.0	0.3098
14MX-29S-125-MPB	**482167**	29	5.088	4.978	5.763	0	6.50	0.89	1.50	3.19	23.7	0.3599
14MX-30S-125-MPB	**482168**	30	5.263	5.153	5.763	0	6.50	0.89	1.50	3.19	25.4	0.4156
14MX-31S-125-MPB	**482169**	31	5.439	5.329	6.114	0	6.50	0.89	1.50	3.44	27.3	0.4697
14MX-32S-125-MPB	**482170**	32	5.614	5.504	6.114	0	6.50	0.89	1.50	3.44	39.2	0.5382
14MX-33S-125-MPB	**482171**	33	5.790	5.680	6.465	0	6.69	1.08	1.50	3.50	31.8	0.6138
14MX-34S-125-MPB	**482172**	34	5.965	5.855	6.465	0	6.69	1.08	1.50	3.50	34.3	0.6967
14MX-35S-125-MPB	**482173**	35	6.141	6.031	6.816	0	6.69	1.08	1.50	3.81	36.2	0.7877
14MX-36S-125-MPB	**482174**	36	6.316	6.206	6.816	0	6.69	1.08	1.50	3.81	38.0	0.8870
14MX-37S-125-MPB	**482175**	37	6.492	6.382	7.167	0	6.69	1.08	1.50	4.13	40.3	0.9953
14MX-38S-125-MPB	**482176**	38	6.667	6.557	7.167	0	6.69	1.08	1.50	4.13	42.5	1.1131
14MX-39S-125-MPB	**482177**	39	6.842	6.732	7.518	0	6.69	1.08	1.50	4.38	44.9	1.2283
14MX-40S-125-MPB	**482178**	40	7.018	6.908	7.518	0	6.69	1.08	1.50	4.38	47.2	1.3666
14MX-43S-125-MPB	**482179**	43	7.544	7.434	8.044	0	6.81	1.20	1.50	4.81	55.5	1.8507
14MX-45S-125-MPB	**482180**	45	7.895	7.785	8.395	0	6.81	1.20	1.50	5.00	61.3	2.2373
14MX-48S-125-MPB	**482181**	48	8.421	8.311	8.941	0	6.81	1.20	1.50	5.63	68.7	2.9260

SPECIFICATION

HT500 Sprockets
For ACHE Application
TAPER LOCK

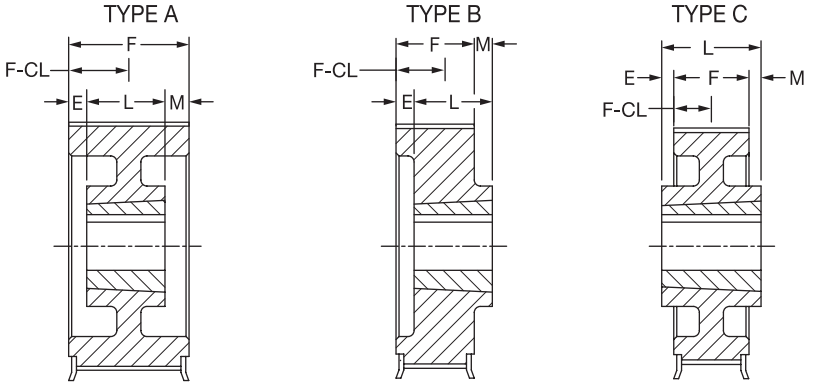

TYPE AF TYPE BF TYPE CF

1 = Block 2 = Web 3 = Arms

The letter "F" in column "Type" indicates that Sprocket has flanges

FIN-FAN HT500 Sprockets **For Cooling Tower Drives**

Sprocket Number	Part No.	No. Of Teeth	Diameters (In.)			Type			Bore Sizes		Approx. Weight (Lbs.)	Approx. WR^2 (Lb-Ft^2)
			P.D.	O.D.	Flange		L	M	Min.	Max		
14MX-37					**F = 2.06"**							
F14MX-180S-37-3020	**482086**	180	31.580	31.470	- - -	B3	2.00	0.06	7/8	3 1/4	120.0	76.1453
F14MX-200S-37-3020	**482087**	200	35.086	34.979	- - -	B3	2.00	0.06	7/8	3 1/4	130.0	110.593
F14MX-224S-37-3020	**482088**	224	39.296	39.190	- - -	B3	2.00	0.06	7/8	3 1/4	177.0	165.315

HT500 Sprockets
For ACHE Application
QD

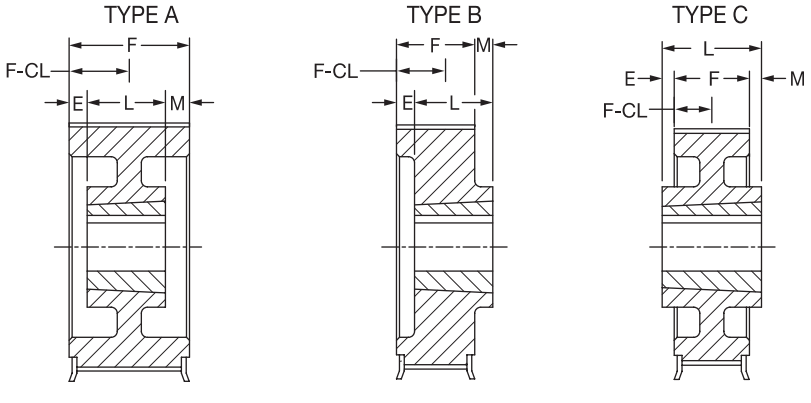

1 = Block 2 = Web 3 = Arms

The letter "F" in column "Type" indicates that Sprocket has flanges

FIN-FAN HT500 Sprockets For Cooling Tower Drives

Sprocket Number	Part No.	No. Of Teeth	Diameters (In.)			Type	Dimensions (In.)			Bore Sizes		Approx. Weight (Lbs.)
			P.D.	O.D.	Flange		E	L	M	Min.	Max	
8MX-21						**F = 1.20"**						
F8MX-36S-21-SH	**482199**	36	3.609	3.546	4.009	A1F	0	0.81	0.39	1/2	1 5/8	2.1
F8MX-38S-21-SH	**482200**	38	3.810	3.747	4.210	A1F	0	0.81	0.39	1/2	1 5/8	2.1
F8MX-40S-21-SH	**482201**	40	4.010	3.947	4.410	A1F	0	0.81	0.39	1/2	1 5/8	2.3
F8MX-42S-21-SH	**482202**	42	4.211	4.148	4.911	A1F	0	0.81	0.39	1/2	1 5/8	2.5
F8MX-140S-21-SF	**482203**	140	14.036	13.973	- - -	B2	0	1.25	0.05	1/2	2 13/16	25.0
F8MX-168S-21-SF	**482204**	168	16.843	16.780	- - -	B3	0	1.25	0.05	1/2	2 13/16	33.8
F8MX-180S-21-SF	**482205**	180	18.046	17.983	- - -	B3	0	1.25	0.05	1/2	2 13/16	36.6
F8MX-224S-21-E	**482206**	224	22.457	22.394	- - -	B3	0	1.63	0.43	7/8	3 1/2	50.1
14MX-20						**F = 1.36"**						
F14MX-28S-20-SK	**482207**	28	4.912	4.802	5.402	A1F	0	1.25	0.11	1/2	2 1/2	3.9
F14MX-29S-20-SK	**482208**	29	5.088	4.978	5.763	A1F	0	1.25	0.11	1/2	2 1/2	4.5
F14MX-30S-20-SK	**482209**	30	5.263	5.153	5.763	A1F	0	1.25	0.11	1/2	2 1/2	4.8
F14MX-31S-20-SK	**482210**	31	5.439	5.329	6.114	A1F	0	1.25	0.11	1/2	2 1/2	5.5
F14MX-32S-20-SK	**482211**	32	5.614	5.504	6.114	A1F	0	1.25	0.11	1/2	2 1/2	5.9
F14MX-33S-20-SK	**482212**	33	5.790	5.680	6.465	A1F	0	1.25	0.11	1/2	2 1/2	6.3
F14MX-34S-20-SK	**482213**	34	5.965	5.855	6.465	A1F	0	1.25	0.11	1/2	2 1/2	6.9
F14MX-35S-20-SK	**482214**	35	6.141	6.031	6.816	A1F	0	1.25	0.11	1/2	2 1/2	7.3
F14MX-36S-20-SF	**482215**	36	6.315	6.206	6.816	A1F	0	1.25	0.11	1/2	2 15/16	7.9
F14MX-140S-20-E	**482216**	140	24.560	24.452	- - -	B3	0	1.63	0.27	7/8	3 1/2	66.1
F14MX-168S-20-F	**482217**	168	29.472	29.365	- - -	C3	0.56	2.50	0.58	1	3 15/16	90.0
F14MX-180S-20-F	**482218**	180	31.580	31.470	- - -	B3	0	2.50	1.14	1	3 15/16	107.3
F14MX-200S-20-F	**482219**	200	35.086	34.979	- - -	C3	0.88	2.50	0.26	1	3 15/16	119.0
F14MX-224S-20-F	**482220**	224	39.300	39.190	- - -	B3	0	2.50	1.14	1	3 15/16	125.0
14MX-37						**F = 2.06"**						
F14MX-28S-37-SK	**482221**	28	4.912	4.802	5.402	A1F	0.81	1.25	0	1/2	2 1/2	4.2
F14MX-29S-37-SK	**482222**	29	5.088	4.978	5.763	A1F	0.81	1.25	0	1/2	2 1/2	4.7
F14MX-30S-37-SK	**482223**	30	5.263	5.153	5.763	A1F	0.81	1.25	0	1/2	2 1/2	5.0
F14MX-31S-37-SK	**482224**	31	5.439	5.329	6.114	A1F	0	1.25	0.81	1/2	2 1/2	6.0
F14MX-32S-37-SK	**482225**	32	5.614	5.504	6.114	A1F	0	1.25	0.81	1/2	2 1/2	7.1
F14MX-33S-37-SK	**482226**	33	5.790	5.680	6.465	A1F	0	1.25	0.81	1/2	2 1/2	7.5
F14MX-34S-37-SK	**482227**	34	5.965	5.855	6.465	A1F	0	1.25	0.81	1/2	2 1/2	7.8
F14MX-35S-37-SK	**482228**	35	6.141	6.031	6.816	A1F	0	1.25	0.81	1/2	2 1/2	8.3
F14MX-36S-37-SF	**482229**	36	6.315	6.206	6.816	A1F	0.25	1.25	0.56	1/2	2 15/16	8.8
F14MX-180S-37-E	**482230**	180	31.580	31.470	- - -	A3	0.19	1.63	0.21	7/8	3 1/2	120.0
F14MX-200S-37-E	**482231**	200	35.089	34.979	- - -	A3	0.19	1.63	0.21	7/8	3 1/2	130.0
F14MX-224S-37-E	**482232**	224	39.300	39.190	- - -	A3	0.19	1.63	0.21	7/8	3 1/2	177.0

SPECIFICATION

HT500 IDLER Sprockets

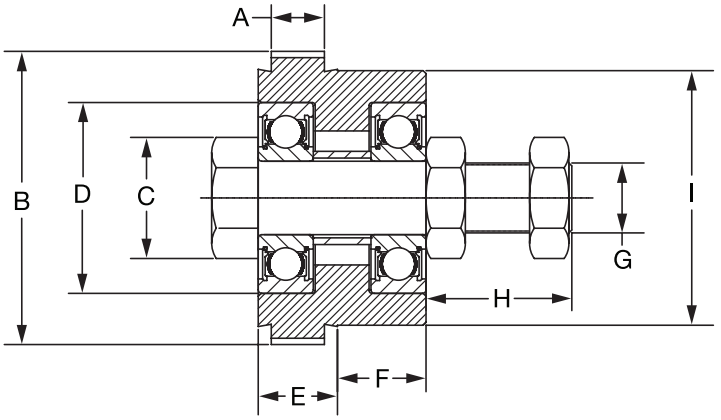

Idler Number	Part No.	No. Of Teeth	Belt Width mm	A (Ref) In	B In	C (Ref) In	D In	E (Ref) In	F In	G (Threads) In	H (Ref) In	I In	Approx. Weight (Lbs.)
8MX-32-12-IDL	**482233**	32	12	0.56	3.15	1.13	2.05	0.85	0.96	3/4-16UNF	1.58	2.73	3.8
8MX-32-21-IDL	**482234**	32	21	0.97	3.15	1.25	2.05	1.24	0.57	3/4-16UNF	1.58	2.73	3.9
8MX-36-36-IDL	**482235**	36	36	1.59	3.55	1.75	2.83	1.86	0.00	3/4-16UNF	1.77	0.00	5.1
8MX-36-62-IDL	**482236**	36	62	2.63	3.55	1.75	2.83	2.91	0.65	3/4-16UNF	1.83	0.65	9.7
14MX-30-20-IDL	**482237**	30	20	1.05	5.15	2.38	3.54	1.36	0.97	1-14NS-1B	2.38	4.35	12.5
14MX-30-37-IDL	**482238**	30	37	1.73	5.15	2.38	3.54	2.06	0.25	1-14NS-1B	2.38	4.35	13.5
14MX-34-68-IDL	**482239**	34	68	3.02	5.86	2.75	4.38	3.33	0.98	1-14NS-1B	2.38	4.89	26.0
14MX-34-90-IDL	**482240**	34	90	3.88	5.86	2.75	4.38	4.20	0.99	1-14NS-1B	2.25	4.89	32.2
14MX-34-125-IDL	**482241**	34	125	5.28	5.86	2.75	4.38	5.61	1.08	1-14NS-1B	2.38	4.89	36.4

SPECIFICATION

HT500 Belts

HT500 Belts are for use on Taper-Lock HT500 Sprockets
Belt length is in millimeters
To convert to inches, divide by 25.4

8MM Pitch HT500 Belts

12MM Wide			21MM Wide			36MM Wide			62MM Wide		
Description	**P/N**	**Wt.**	**Description**	**P/N**	**Wt.**	**Description**	**P/N**	**Wt.**	**Description**	**P/N**	**Wt.**
248-8MX-12	**142600**	0.04	248-8MX-21	**142638**	0.05	248-8MX-36	**142676**	0.09	640-8MX-62	**142714**	0.80
288-8MX-12	**142601**	0.04	288-8MX-21	**142639**	0.06	288-8MX-36	**142677**	0.11	720-8MX-62	**142715**	1.00
352-8MX-12	**142602**	0.05	352-8MX-21	**142640**	0.07	352-8MX-36	**142678**	0.13	800-8MX-62	**142716**	1.08
416-8MX-12	**142603**	0.05	416-8MX-21	**142641**	0.09	416-8MX-36	**142679**	0.15	896-8MX-62	**142717**	1.20
456-8MX-12	**142604**	0.06	456-8MX-21	**142642**	0.10	456-8MX-36	**142680**	0.17	960-8MX-62	**142718**	1.25
480-8MX-12	**142605**	0.06	480-8MX-21	**142643**	0.10	480-8MX-36	**142681**	0.18	1000-8MX-62	**142719**	1.30
544-8MX-12	**142606**	0.07	544-8MX-21	**142644**	0.12	544-8MX-36	**142682**	0.20	1040-8MX-62	**142720**	1.35
608-8MX-12	**142607**	0.07	608-8MX-21	**142645**	0.13	608-8MX-36	**142683**	0.22	1120-8MX-62	**142721**	1.40
640-8MX-12	**142608**	0.40	640-8MX-21	**142646**	0.40	640-8MX-36	**142684**	0.70	1200-8MX-62	**142722**	1.75
720-8MX-12	**142609**	0.47	720-8MX-21	**142647**	0.45	720-8MX-36	**142685**	0.75	1224-8MX-62	**142723**	1.65
800-8MX-12	**142610**	0.50	800-8MX-21	**142648**	0.50	800-8MX-36	**142686**	0.80	1280-8MX-62	**142724**	1.70
896-8MX-12	**142611**	0.55	896-8MX-21	**142649**	0.53	896-8MX-36	**142687**	0.90	1440-8MX-62	**142725**	1.85
960-8MX-12	**142612**	0.58	960-8MX-21	**142650**	0.58	960-8MX-36	**142688**	0.97	1600-8MX-62	**142726**	2.00
1000-8MX-12	**142613**	0.60	1000-8MX-21	**142651**	0.60	1000-8MX-36	**142689**	1.00	1760-8MX-62	**142727**	2.10
1040-8MX-12	**142614**	0.65	1040-8MX-21	**142652**	0.65	1040-8MX-36	**142690**	1.02	1792-8MX-62	**142728**	2.10
1120-8MX-12	**142615**	0.68	1120-8MX-21	**142653**	0.70	1120-8MX-36	**142691**	1.10	2000-8MX-62	**142729**	2.30
1200-8MX-12	**142616**	0.70	1200-8MX-21	**142654**	0.75	1200-8MX-36	**142692**	1.12	2200-8MX-62	**142730**	2.50
1224-8MX-12	**142617**	0.72	1224-8MX-21	**142655**	0.75	1224-8MX-36	**142693**	1.20	2240-8MX-62	**142731**	2.55
1280-8MX-12	**142618**	0.75	1280-8MX-21	**142656**	0.80	1280-8MX-36	**142694**	1.25	2400-8MX-62	**142732**	2.80
1440-8MX-12	**142619**	0.80	1440-8MX-21	**142657**	0.90	1440-8MX-36	**142695**	1.35	2520-8MX-62	**142733**	2.90
1600-8MX-12	**142620**	0.90	1600-8MX-21	**142658**	1.00	1600-8MX-36	**142696**	1.45	2600-8MX-62	**142734**	2.95
1760-8MX-12	**142621**	0.95	1760-8MX-21	**142659**	1.15	1760-8MX-36	**142697**	1.60	2800-8MX-62	**142735**	3.10
1792-8MX-12	**142622**	1.00	1792-8MX-21	**142660**	1.15	1792-8MX-36	**142698**	1.65	2840-8MX-62	**142736**	3.15
2000-8MX-12	**142623**	1.10	2000-8MX-21	**142661**	1.25	2000-8MX-36	**142699**	1.70	3048-8MX-62	**142737**	3.40
2200-8MX-12	**142624**	1.15	2200-8MX-21	**142662**	1.38	2200-8MX-36	**142700**	1.88	3200-8MX-62	**142738**	3.60
2240-8MX-12	**142625**	1.20	2240-8MX-21	**142663**	1.40	2240-8MX-36	**142701**	1.90	3280-8MX-62	**142739**	3.70
2400-8MX-12	**142626**	1.30	2400-8MX-21	**142664**	1.50	2400-8MX-36	**142702**	2.00	3600-8MX-62	**142740**	4.05
2520-8MX-12	**142627**	1.35	2520-8MX-21	**142665**	1.60	2520-8MX-36	**142703**	2.15	4000-8MX-62	**142741**	4.40
2600-8MX-12	**142628**	1.40	2600-8MX-21	**142666**	1.65	2600-8MX-36	**142704**	2.30	4400-8MX-62	**142742**	4.80
2800-8MX-12	**142629**	1.50	2800-8MX-21	**142667**	1.75	2800-8MX-36	**142705**	2.40	4480-8MX-62	**142743**	4.90
2840-8MX-12	**142630**	1.52	2840-8MX-21	**142668**	1.80	2840-8MX-36	**142706**	2.50			
3048-8MX-12	**142631**	1.65	3048-8MX-21	**142669**	1.90	3048-8MX-36	**142707**	2.62			
3200-8MX-12	**142632**	1.70	3200-8MX-21	**142670**	2.05	3200-8MX-36	**142708**	2.70			
3280-8MX-12	**142633**	1.75	3280-8MX-21	**142671**	2.10	3280-8MX-36	**142709**	2.72			
3600-8MX-12	**142634**	1.85	3600-8MX-21	**142672**	2.25	3600-8MX-36	**142710**	2.95			
4000-8MX-12	**142635**	2.10	4000-8MX-21	**142673**	2.55	4000-8MX-36	**142711**	3.25			
4400-8MX-12	**142636**	2.25	4400-8MX-21	**142674**	2.75	4400-8MX-36	**142712**	3.55			
4480-8MX-12	**142637**	2.33	4480-8MX-21	**142675**	2.80	4480-8MX-36	**142713**	3.60			

SPECIFICATION

HT500 Belts

HT500 Belts are for use on Taper-Lock HT500 Sprockets
Belt length is in millimeters
To convert to inches, divide by 25.4

14MM Pitch HT500 Belts

20MM Wide			37MM Wide			68MM Wide			90MM Wide			125MM Wide		
Description	**P/N**	**Wt.**	**Description**	**P/N**	**Wt.**	**Description**	**P/N**	**Wt.**	**Description**	**P/N**	**Wt.**	**Description**	**P/N**	**Wt.**
994-14MX-20	**142744**	1.30	994-14MX-37	**142771**	1.60	994-14MX-68	**142798**	2.40	994-14MX-90	**142825**	3.00	994-14MX-125	**142852**	3.60
1120-14MX-20	**142745**	1.35	1120-14MX-37	**142772**	1.70	1120-14MX-68	**142799**	2.60	1120-14MX-90	**142826**	3.30	1120-14MX-125	**142853**	3.90
1190-14MX-20	**142746**	1.40	1190-14MX-37	**142773**	1.75	1190-14MX-68	**142800**	2.70	1190-14MX-90	**142827**	3.35	1190-14MX-125	**142854**	4.00
1260-14MX-20	**142747**	1.45	1260-14MX-37	**142774**	1.80	1260-14MX-68	**142801**	2.80	1260-14MX-90	**142828**	3.60	1260-14MX-125	**142855**	4.20
1400-14MX-20	**142748**	1.55	1400-14MX-37	**142775**	2.05	1400-14MX-68	**142802**	3.00	1400-14MX-90	**142829**	3.35	1400-14MX-125	**142856**	4.60
1568-14MX-20	**142749**	1.65	1568-14MX-37	**142776**	2.20	1568-14MX-68	**142803**	3.25	1568-14MX-90	**142830**	4.10	1568-14MX-125	**142857**	5.00
1610-14MX-20	**142750**	1.70	1610-14MX-37	**142777**	2.30	1610-14MX-68	**142804**	3.40	1610-14MX-90	**142831**	4.25	1610-14MX-125	**142858**	5.20
1750-14MX-20	**142751**	1.75	1750-14MX-37	**142778**	2.45	1750-14MX-68	**142805**	3.60	1750-14MX-90	**142832**	4.50	1750-14MX-125	**142859**	5.40
1890-14MX-20	**142752**	1.75	1890-14MX-37	**142779**	2.55	1890-14MX-68	**142806**	3.95	1890-14MX-90	**142833**	4.85	1890-14MX-125	**142860**	5.80
1960-14MX-20	**142753**	1.80	1960-14MX-37	**142780**	2.60	1960-14MX-68	**142807**	4.00	1960-14MX-90	**142834**	4.95	1960-14MX-125	**142861**	6.00
2100-14MX-20	**142754**	1.90	2100-14MX-37	**142781**	2.70	2100-14MX-68	**142808**	4.20	2100-14MX-90	**142835**	5.20	2100-14MX-125	**142862**	6.50
2240-14MX-20	**142755**	1.98	2240-14MX-37	**142782**	2.85	2240-14MX-68	**142809**	4.50	2240-14MX-90	**142836**	5.45	2240-14MX-125	**142863**	6.80
2310-14MX-20	**142756**	2.05	2310-14MX-37	**142783**	2.90	2310-14MX-68	**142810**	4.70	2310-14MX-90	**142837**	5.50	2310-14MX-125	**142864**	7.00
2380-14MX-20	**142757**	2.10	2380-14MX-37	**142784**	3.00	2380-14MX-68	**142811**	4.70	2380-14MX-90	**142838**	5.70	2380-14MX-125	**142865**	7.10
2450-14MX-20	**142758**	2.15	2450-14MX-37	**142785**	3.10	2450-14MX-68	**142812**	4.85	2450-14MX-90	**142839**	5.85	2450-14MX-125	**142866**	7.20
2520-14MX-20	**142759**	2.20	2520-14MX-37	**142786**	3.20	2520-14MX-68	**142813**	4.90	2520-14MX-90	**142840**	5.90	2520-14MX-125	**142867**	7.40
2590-14MX-20	**142760**	2.20	2590-14MX-37	**142787**	3.25	2590-14MX-68	**142814**	5.00	2590-14MX-90	**142841**	5.95	2590-14MX-125	**142868**	7.60
2660-14MX-20	**142761**	2.25	2660-14MX-37	**142788**	3.35	2660-14MX-68	**142815**	5.15	2660-14MX-90	**142842**	6.10	2660-14MX-125	**142869**	7.75
2800-14MX-20	**142762**	2.30	2800-14MX-37	**142789**	3.40	2800-14MX-68	**142816**	5.20	2800-14MX-90	**142843**	6.40	2800-14MX-125	**142870**	8.30
3136-14MX-20	**142763**	2.50	3136-14MX-37	**142790**	3.65	3136-14MX-68	**142817**	5.80	3136-14MX-90	**142844**	7.00	3136-14MX-125	**142871**	9.10
3304-14MX-20	**142764**	2.55	3304-14MX-37	**142791**	3.85	3304-14MX-68	**142818**	6.05	3304-14MX-90	**142845**	7.35	3304-14MX-125	**142872**	9.50
3360-14MX-20	**142765**	2.60	3360-14MX-37	**142792**	3.85	3360-14MX-68	**142819**	6.10	3360-14MX-90	**142846**	7.50	3360-14MX-125	**142873**	9.65
3500-14MX-20	**142766**	2.70	3500-14MX-37	**142793**	3.95	3500-14MX-68	**142820**	6.30	3500-14MX-90	**142847**	7.70	3500-14MX-125	**142874**	10.00
3850-14MX-20	**142767**	2.85	3850-14MX-37	**142794**	4.25	3850-14MX-68	**142821**	6.80	3850-14MX-90	**142848**	8.30	3850-14MX-125	**142875**	10.75
3920-14MX-20	**142768**	2.95	3920-14MX-37	**142795**	4.35	3920-14MX-68	**142822**	7.00	3920-14MX-90	**142849**	8.50	3920-14MX-125	**142876**	11.00
4326-14MX-20	**142769**	3.15	4326-14MX-37	**142796**	4.70	4326-14MX-68	**142823**	7.70	4326-14MX-90	**142850**	9.20	4326-14MX-125	**142877**	12.00
4410-14MX-20	**142770**	3.20	4410-14MX-37	**142770**	4.75	4410-14MX-68	**142824**	7.85	4410-14MX-90	**142851**	9.30	4410-14MX-125	**142878**	12.20

HT500 Low-Speed Design Load Calculations

For use when designing HT500 belt drives with low speeds

I. Actual Operating Loads Known

In such cases where the actual operating load is known, design the belt drive for the actual operating load rather than for a load based upon the motor name plate. Use Equation 1 to calculate the proper drive design load based upon motor load (name plate or measured) when the belt drive will be installed on the reducer output shaft.

Design Load

Equation 1

DesignLoad = (MotorLoad) x ServiceFactor x (% Reducer Efficiency/100) Motor Load: From user/OEM

Service Factor: From Table 1

% Efficiency: From reducer manufacturer

Table 1—Service Factors for Low-Speed Drives
For Drive Selections With Shaft Speeds Less Than 500 rpm

DriveN Machine	Typical drivers are electric motors, hydraulic motors, or internal combustion engines with hydraulic couplings/torque converters.		
Select a driven load category whose characteristics most closely represent those of the actual equipment	Intermittent Service	Normal Service	Continuous Service
	3-5 Hours Daily	8-10 Hours Daily	16-24 Hours Daily
Uniform Load: **Agitators & Mixers:** liquid and semi-liquid **Conveyors:** light package, oven, ore, sand, salt **Food Equipment:** bottling machinery, kettles, cookers, food handling machinery **Line shafts:** light or normal service **Paper Industry:** agitators, bleachers, calendars, dryer machinery **Printing Machinery:** cutters, rotary, embossing & flatbed presses, linotype, folders	1.0	1.2	1.3
Moderate Shock Load: **Agitator Mixers:** dough, heavy syrups **Brick & Clay Machinery:** auger, brick machines **Conveyors:** apron, bucket, pan, elevator **Cranes & Hoists:** hoists, elevators **Line Shafts:** moderate, heavy service **Paper Industry:** yankee dryer, winder drums **Printing Machinery:** magazine & newspaper printing presses **Rubber & Plastics Machinery:** calendars, rolls, tubers, extruders	1.3	1.4	1.5
Heavy Shock Loads: **Brick & Clay Machinery:** mixers, pug mills, rolls **Conveyors:** screw, flight **Crushing Machinery:** ball mills, jaw crushers, roll crushers **Mills:** rotary, ball, pebble, rod, tube **Mixers:** concrete **Rubber & Plastics Machinery:** mixers, sheeters	1.5	1.6	1.7

Additional Guidelines

There are many driven machines using, or potentially designed to use, roller chain drive systems.

When converting these to HT500 drives, consider the following additional guidelines.

- Do not overlook the torque multiplying effect of belt drives and speed reducers when calculating with torque loads.
- Engineering judgment should be used in determining a design load for non-standard motors with high starting loads (NEMA C, NEMA D, Direct Current, etc.).
- For guidance in calculating speed reducer efficiency, refer to Speed Reducer Efficiency on Page PT12-24.

Low-Speed HT500 Belt Drive Selection Procedure

For drive selections with shaft speeds less than 500 rpm

Selection of a Stock HT500 belt drive system involves these eight steps:

1. Calculate the Design Horsepower
2. Select the Belt Pitch
3. Select the Sprockets and Belt Length
4. Select the Proper Belt Width
5. Check and Specify Stock Drive Components
6. Installation and Take-up
7. Calculate Belt Tensioning Requirements
8. Verify Speed Reducer Overhung Load

Sample Drive Selection Problem

A blank Low-Speed Drive Design Information Sheet can be found on page PT12-25. This form provides a convenient method for collecting data to properly design or convert to a HT500 belt drive.

In this example, an ore conveyor is powered by an electric motor directly connected to a speed reducer. A HT500 belt drive is needed to transmit power from the speed reducer output shaft to the conveyor shaft. The motor is a 5 horsepower, 1750 rpm normal torque AC motor.

The speed reducer is a worm gear type unit with a 50 to 1 speed ratio. The ore conveyor is to be driveN at 17.5 ± 5% rpm and operates 24 hours per day 7 days a week. The center distance between shafts is 50.0 inches, but can be altered ± 3.0 inches, if necessary. The speed reducer output shaft has a 1.500 inch diameter and the conveyor shaft has a 2.000 inch diameter.

Step 1 Calculate The Design Horsepower

The Design Horsepower should be calculated as follows:

Design Horsepower =

(Motor Load) x (Low-Speed Service Factor) x (Reducer Efficiency)

Procedure

A. The motor load can be determined by several methods as explained in the Low-Speed Drive Load Calculations section on pages PT12-22 - PT12-24. The method used for determining motor load will depend on how much information is available on the application. A worksheet is provided on page PT12-25 to help choose which method is most appropriate given the information known.

Example

This example demonstrates the Proportioned Amperage Rating approach described in Formula 5 below.

$$\text{Horsepower} = \frac{\text{(nameplate HP) (measured Amps)}}{\text{(nameplate Amps)}}$$

Motor = 5.00 hp (nameplate rating)
Nameplate Amps= 70.
Measured Amps: Phase 1 = 4.1
Phase 2 = 4.4
Phase 3 = 4.2

$$\text{Average Measured Amps} = \frac{\text{Phase 1 + Phase 2 + Phase 3}}{3}$$

$$= \frac{\text{4.1 amps + 4.4 amps + 4.2 amps}}{3}$$

Average Measured Amps = 4.2 amps

$$\text{Motor Load} = \frac{\text{(Nameplate hp) (Average Measured Amps)}}{\text{(Nameplate Amps)}}$$

$$= \frac{\text{5 hp x4.2 amps}}{\text{7.0 amps}}$$

Motor Load= 3.00 hp Procedure

B. The proper Low-Speed Service Factor is selected from Table 1 - Service Factors For Low-Speed Roller Chain Drive Conversions. The selection is based on the category of machinery being driven and the number of service hours per day.

Example

An Ore Conveyor is found in the Uniform Load drive group. Reading across to the right, the column heading for 16-24 hours daily service shows that a 1**.3 Service Factor** is recommended.

Procedure

C. The Reducer Efficiency is available from the speed reducer name plate or manufacturers' catalogs. Often the speed reducer efficiency is not provided directly in manufacturer's catalog. In such cases the reducer efficiency must be calculated as described on page PT12-24.

Example - Speed Reducer Efficiency Calculation
Speed Reducer Rated Input Load hp = .65
Speed Reducer Rated Output Torque = lb-in. 6210
Speed Reducer Rated Output Speed rpm = 35
Rated Output hp

$$= \frac{\text{(Rated Output Torque) x (Output Speed)}}{63025}$$

$$= \frac{\text{(6210lb -in) x(35 rpm)}}{63025}$$

Rated Output hp = 3.4

$$\text{Reducer Efficiency} = \frac{\text{Rated Output Power}}{\text{Rated Input Power}}$$

$$= \frac{\text{3.4 hp}}{\text{6.5 hp}}$$

Reducer Efficiency = 0.53 or 53%

Procedure

D. The Design Horsepower can now be determined by multiplying these three values together.

Example - ***Design Horsepower Calculation***

Motor Load = **3.00 hp**
Low-Speed Service Factor =**1.3**
Reducer Efficiency = 53%
Horsepower = (Motorload)(Reducer Eff)
Horsepower = (3.00)(0.53) = 1.59

Design Horsepower = (HP)(Low Speed Service Factor)
Design Horsepower = (1.59)(1.3)
Design Horsepower = 2.07

Low-Speed HT500 Belt Drive Selection Procedure

Step 2 Select The Belt Pitch

Procedure

Using the Design Horsepower and the output speed of the speed reducer, select the belt pitch from the Belt Pitch Selection Guide Chart on page PT12-31.

Example

Design Horsepower = **2.07 hp**
Reducer Output Speed = **35 rpm**

Locate 35 rpm on the "RPM of Faster Shaft" scale on the left side of the chart and move over to where the 2.07 Design Horsepower line intersects. The intersection falls within the **8mm** pitch section, but a 14mm pitch belt could also be used.

Step 3 Select The Sprockets and Belt Length

Procedure

A. Determine the belt drive speed ratio: The speed ratio can be calculated by dividing the speed (rpm) of the faster shaft by the speed (rpm) of the slower shaft.

Example

Reducer Output Speed = 35 rpm

Ore Conveyor Speed = 17.5 rpm

$$\text{Speed Ratio} = \frac{\text{rpm of faster shaft}}{\text{rpm of slower shaft}} = \frac{35}{17.5} = 2.00$$

B. Select the sprocket combination and belt length: Referring to the Stock Drive Selection Tables, find the proper set of tables for the belt pitch (8mm or 14mm) found in Step 2. Looking down the speed ratio column, find the value which most closely matches the belt drive speed ratio required. Reading across the selected speed ratio line, find the stock DriveR and DriveN sprocket combination available. Reading further across, locate the belt drive center distance which most closely matches the target center distance specified. The belt sizes are listed across the top of the table for each corresponding center distance.

Multiple sprocket combinations will often be available for a given speed ratio. In such cases, selection of the proper drive combination will depend on the center distance required, minimum or maximum required sprocket diameters and speed reducer overhung load requirements. After selecting possible sprocket combinations and center distances, record the belt length (top of column) and the length factor (bottom of column).

Example
Belt pitch = 14mm
Belt Drive Speed Ratio = 2.000
Center Distance = 50.00 ± 3.00 in. (from the problem statement)

Refer to the 14mm Pitch Stock Drive Selection Tables on pages PT12-63 - PT12-76. Reading down the Speed Ratio Column locate 2.000. In this case, there are five different drive combinations available for a 2.000 Speed Ratio. Checking the center distance values for each combination, the 50.10 inch value is the closest to the 50.00 inch target. So, the 28 teeth DriveR sprocket, 56 teeth DriveN sprocket, and 3136-14MX (224 teeth) belt combination is selected. Also note that the Belt Length Correction Factor is 1.12 with a center distance of 50.10 inches.

Step 4 Select The Proper Belt Width Procedure

Horsepower Rating Tables are located on pages PT12-38 - PT12-46 for standard belt pitches and stock belt widths. The base horsepower rating is given in the upper table as a function of the speed (rpm) of the faster shaft and diameter of the small sprocket. The speed of the faster shaft is located in the left hand column. Across the top are various stock sprocket sizes. The base horsepower rating of a given sprocket, at a specific speed, is the point at which the "rpm" row and the "sprocket size" column intersect.

This basic horsepower rating must be corrected for speed down speed ratios, and for the belt length selected. The following formula should be used to calculate the total drive horsepower rating:

Rated Drive Horsepower = [Rated Base Horsepower

+ Additional Horsepower for Speed Ratio]

x (Belt Length Correction Factor)

Referring to the Speed Ratio Add-On Factor Table, select a value based upon the drive operating speed and the speed ratio. This value should be added to the basic horsepower rating. Multiply the corrected rating by the applicable Belt Length Correction Factor determined in Step 3B or from the Belt Length Correction Factor Table. The corrected horsepower rating must equal or exceed design horsepower.

Where there are several choices, space limitations may control the selection. In addition, the following guidelines should be considered:

1. Larger sprockets result in reduced belt width.
2. Larger sprockets yield longer drive service life.
3. Avoid drives where the belt width exceeds the smaller sprocket diameter.
4. Avoid drives where center distance is greater than 8 times the diameter of the smaller sprocket.

Example

Referring to the 14mm pitch Horsepower Rating Table for 20mm Wide belts on page PT12-42. Read down the left hand column for "RPM of Faster Shaft" and locate 35 rpm. Read the sprocket sizes listed across the top of the table and locate the 28 teeth, 4.912 inch P.D. column. Read across the "RPM" row and down the sprocket size column until the two intersect at a **Rated Base Horsepower of 2.53 HP.**

Next, referencing the Speed Ratio Add-On Correction Table (page PT12-42), find the listing for a 2.000 speed ratio. An add-on factor of 0.11 hp is listed. Then, referencing the Belt Length Correction Factor Table (page PT12-72), find the listing for a 3136-14MX belt. A correction factor of 1.12 is listed.

Low-Speed HT500 Belt Drive Selection Procedure

Calculate the Corrected Horsepower Rating:

Rated Drive Horsepower =

[Rated Base Horsepower + Added HP for Speed Ratio] x (Belt Length Correction Factor) = [2.53 hp+ 0.11 hp] x (1.12)

Rated Drive Horsepower 2.96 hp

The Corrected Horsepower Rating of 2.96 hp exceeds the Design Horsepower target of 2.07 hp. So, a **belt width of 20mm** is acceptable.

Step 5 Check and Specify Stock Drive Components

Procedure

A. Check the sprockets selected against any special design requirements using the dimensions provided in the Sprocket Specifications Tables on pages PT12-6 - PT12-13. Use flange diameters when checking against maximum diameter requirements.

B. Determine the bushing size required for each sprocket and check bore sizes by using the Sprocket Specification Tables. From the Stock Bushing tables in the bushing section, check the bore range and keyway dimensions against the design requirements.

Example

Also from the sprocket data on page PT12-9 we note that the **14MX-28S-20 sprocket** requires a 2012 bushing and the **14MX-56S-20 sprocket requires a 3525 bushing**. On page PT12-81 in the bushing data table, a **2012 bushing has a bore range of 1/2 to 2-1/8 inches**, which includes the 1-1/2 inch bore required for the driveR shaft. The **3525 bushing has a bore range from 1-3/16 to 3-15/16** inches page PT12-83, which includes the 2 inch bore required for the driveN shaft.

C. Specify stock drive components using proper designations.

Example
Stock drive components are as follows:

1 ea. - 3136-14MX-20 HT500 belt
1 ea. - 14MX-28S-20 driveR sprocket
1 ea. - 2012 Bushing with a 1-1/2 in. bore
1 ea. - 14MX-56S-20 driveN sprocket
1 ea. - 3525 Bushing with a 2 in. bore

Step 6 Installation and Take-up

Procedure

Because of its high resistance to elongation (stretch), there is no need to re-tension and take-up a HT500 belt drive. However, some adjustment must be provided when installing synchronous belt drives, as with nearly all power transmission systems, due to manufacturing and assembly tolerances and initial tensioning requirements. Table 11 on page PT12-36 lists the standard installation and take-up requirements for a given belt length. Additional center distance adjustment is needed when installing the belt over flanged sprockets (see Table 11 on page PT12-36.)

Example

As can be seen in the Sprocket Specifications Table on page PT12-9, both of the sprockets are flanged. Therefore, an additional allowance will be needed for installation over flanged sprockets. The total installation and tensioning allowances, are shown below.

Installation Allowance = 0.16 in. + 1.97 in. = 2.13 in.
Tensioning Allowance = 0.05 in.

Subtracting this from the nominal center distance value gives a minimum center distance necessary for belt installation of (50.10 inch -2.13 inch) = 47.97 inches. From the problem statement, the center distance can be reduced down to 47.0 in. if needed. So, there is sufficient center distance adjustment to easily install the belt.

Step 7 Calculate Belt Tensioning Requirements

Procedure

A. Calculate base static tension using Formula 14 on page PT12-35. The m value is listed in Table 10 on page PT12-34.

Example

Belt Pitch = 14mm
Belt Size = 3136-14MX, 224 teeth (123.46 in. P.L.)
Belt Width = 20mm
DriveR Sprocket = 28 teeth (4.912 in. P.D.)
DriveR Shaft Speed = 35 rpm
DriveN Sprocket = 56 teeth (9.825 in. P.D.)
Actual Center Distance = 50.10 in.
Design Horsepower = 2.07 hp
Horsepower = 1.59 hp

$$Tst = \frac{20\ DHP}{S} + mS^2, \text{ pounds}$$

where:
DHP = Design Horsepower = 1.59 hp

m = 0.92, constant for 14mm pitch, 20mm wide belt from Table 10 on page PT12-34.
S = (Sprocket Diameter) x (Shaft Speed) / 3820
= (4.912 in.) x (35 rpm) / 3820
S = 0.05

$$Tst = \frac{20\ (1.59)}{0.05} + (0.92)(0.05)2$$

Tst = 636.00 + 0.002 lb.

Tst = 636.00 lb.

Low-Speed HT500 Belt Drive Selection Procedure

Step 7 Calculate Belt Tensioning Requirements

Procedure — continued

B. Calculate minimum and maximum deflection forces using Formulas 15 and 16 on page PT12-35. The Y value is listed in Table 10 on page PT12-34.

Example

a. Calculate the belt span length

$$t=\sqrt{C^2-\left(\frac{D-d}{2}\right)^2}$$

where:

t = Span Length, inches
C = Center Distance = **50.10 in.**
D = diameter of larger sprocket = **9.825 in. P.D.**
d = diameter of smaller sprocket = **4.912 in. P.D.**

$$t=\sqrt{50.10^2-\left(\frac{9.825-4.921}{2}\right)^2}$$

t = 50.04 in.

b. Calculate Minimum and Maximum belt deflection forces referring to Formulas 15 and 16 on page PT12-35:

$$\textit{Min Deflection Force} = \frac{1.1\text{st} + \left(\frac{t}{L}\right)Y}{16} \textit{ pounds}$$

where:

T_{ST} = **636.0** pounds static tension as calculated above
t = **50.04** inches span length as calculated above
L = **123.46** inches belt length
Y = **230** (constant for Y, Table 10 on page PT12-34)

$$\textit{Min Deflection Force} = \frac{1.1(636.0) + \left(\frac{50.04}{123.46}\right)(230)}{16}$$

Min. Deflection Force = 49.5 lb.

$$\textit{Max Deflection Force} = \frac{1.2\text{Tst} + \left(\frac{t}{L}\right)Y}{16}$$

$$\textit{Max Deflection Force} = \frac{1.2(636.0) + \left(\frac{50.04}{123.46}\right)(230)}{16}$$

Min. Deflection Force = 53.5 lb.

C. Determine the deflection distance using 1/64" per inch of span length.

NOTE: Deflection forces must be applied evenly across the entire belt width.

Example

$$\text{Deflection Distance} = \frac{t}{64}, \textit{ inches}$$

$$\text{Deflection Distance} = \frac{50.04}{64}$$

Deflection Distance = 0.78

D. Applying The Tension:

At the center of span (t), apply a force perpendicular to the belt span large enough to deflect the belt 0.78 inch from its normal free position. Be sure that the force is applied evenly across the entire belt width. Note that one sprocket should be free to rotate during the belt tensioning process.

Compare the measured deflection force with the range of minimum to maximum deflection forces calculated previously.

1. If the measured deflection force is less than the minimum recommended deflection force, the belt should be tightened.

2. If the measured deflection force is greater than the maximum recommended deflection force, the belt should be loosened.

Example

When the Ore Conveyer belt drive is properly tensioned, a belt span deflection of 0.78 in. should require a deflection force within the range of 49.5 to 53.5 lb.

Step 8 Verify Speed Reducer Overhung Load

Procedure

An Overhung Load calculation verifies that the belt drive system will not overload the speed reducer shaft and bearings. The Overhung Load calculation for speed reducers varies from manufacturer to manufacturer. Please refer to speed reducer catalogs or contact the speed reducer manufacturer for further assistance.

Low-Speed HT500 Belt Drive Selection Procedure

Advantages of the Low-Speed Drive Design Procedure

Having read through the Low-Speed Drive Design Procedure and example, some may wonder if the extra steps required are really worth the effort. Absolutely! Using the low-speed drive design techniques for drives operating at speeds less than 500 rpm can result in a much smaller drive package at a lower cost. Outlined below is a comparison of the Low-Speed Drive Design Procedure with the traditional drive design procedure. The benefits of designing with a Low Speed Service Factor, Actual Horsepower Load, and Speed Reducer Efficiency are demonstrated. Combining these techniques can result in a substantially narrower belt drive width which saves space and reduces cost.

Comparison 1 — Traditional Drive Design Procedure

The traditional drive design procedure is outlined on pages PT12-28 - PT12-31 and should still be used for belt drives operating at speeds greater than 500 rpm. In the past this procedure was used to select all HT500 belt drives. The new "Low-Speed Drive Design Procedure" results in belt drive systems better sized for low speed power transmission system that typically utilize speed reducers and roller chain.

Using the traditional design procedure to select the belt drive system for the Ore Conveyor example would result in a much wider belt. The traditional design procedure does not account for a low-speed service factor, the actual operating load of the motor, or speed reducer efficiency. Rather, the belt selection is based purely on the name plate horsepower rating of the motor with a standard service factor. For the Ore Conveyor example this would mean a 5 hp name plate rating and a 1.7 service factor resulting in a Design Horsepower for the belt drive of (5.00 hp) x (1.7) = 8.50 hp. This is over 4 times the Design Horsepower of 2.07 hp determined using the Low-Speed Drive Design Procedure. Referring to the Horsepower Rating Tables on pages PT12-38 - PT12-46, **a belt width of 68mm is required for this higher 8.50 Design Horsepower Load using the Traditional Design Method compared to a belt width of only 20mm for the 2.07 Design Horsepower Load using the Low-Speed Design Method.**

Comparison 2 — Benefit of Low-Speed Service Factor

Using a low-speed service factor can reduce the required belt width compared to a standard service factor value. The reason for this is directly related to belt drive operating speeds. Detrimental effects such as belt tensile cord fatigue and belt wear both occur during belt drive operation, but accumulate in direct proportion to the operating speed. Lower operating speeds result in less belt damage over time allowing the use of less severe service factors in the belt drive selection process. Service factors especially for belt drives operating at low speeds (500 rpm and less; includes many roller chain applications) are provided in Table 1—Service Factors For Low-Speed Roller Chain Drive Conversions on page PT12-19.

Referring to the Ore Conveyor Example, a low-speed service factor of 1.3 is recommended for this application. Substituting the reduced 1.3 low-speed service factor: Design Horsepower = (5.00 hp) x (1.3) = 6.50 hp. Referring to the Horsepower Rating Tables on pages PT12-38 - PT12-46, **the belt width required for 6.50 Design Horsepower is 68mm.**

Comparison 3—Benefit of Designing with Actual Motor Load

Typical belt drive selections are based upon motor nameplate horsepower ratings. However, industry surveys estimate that half of all U.S. motors operate at less than 60 percent of their rated load, and one third operate at below 50 percent of their rated load. So, sizing belt drives based on true operating loads can result in a more compact sized belt drive system.

Continuing with the Ore Conveyor Example, the Proportioned Amperage Rating approach was used to calculate a Motor Load of 3.00 hp. Substituting the reduced 3.00 hp motor load: Design Horsepower = (3.00 hp) x (1.3) = 3.90 hp. Referring to the Horsepower Rating Tables on pages PT12-38 - PT12-46, **the belt width required for 3.90 Design Horsepower is only 37mm compared to the 68mm belt width required in Comparison 2**.

Low-Speed Drive Design information Sheet

For Drive Selections with Shaft Speeds Less Than 500 rpm

Distributor _____

Customer: _____

Drive Identification (location, number, etc.) _____

DriveR Information:

Motor Nameplate Data

Rated Horsepower = _____ Rated RPM = _____ Efficiency = _____

Rated Voltage = _____ Rated Amps = _____ Rated Torque = _____

Actual Motor Load = _____

Motor Type: AC ❑ DC ❑ Gear Motor ❑

Output Speed: Constant ❑ Variable ❑

Reducer Information:

Reducer Type (worm, right angle helical, cycloidal, etc):

Reducer Efficiency = _____ Output RPM = _____ Reducer Ratio = _____

Rated Input HP/Torque = _____ Rated Output HP/Torque = _____

Existing Drive Information:

Drive Type: Chain ❑ V-Belt ❑ Synchronous Belt ❑

If chain, type; 2/#60. #80, etc. Lubed ❑ Unlubed ❑

Current Drive Service Life = _____

DriveR Sprocket/Sheave = _____ (teeth/OD) _____ DriveR Shaft Diameter = _____

DriveN Sprocket/Sheave = _____ (teeth/OD) _____ DriveN Shaft Diameter = _____

Center Distance= _____ + _____ - _____

Type of Center Distance Adjustment: _____

Idler used: Yes ❑ No ❑ Inside ❑ Backside ❑

DriveN Information:

Type of Equipment: _____ Actual Horsepower Required = _____

DriveN RPM = _____

Hours/Day = _____ Days/Week = _____ Weeks/Year = _____

Special Requirements:

Space Limitations:

Maximum DriveR Dia. = _____ Maximim DriveN Dia = _____

Maximum DriveR Width = _____ Maximum DriveN Width = _____

Environmental Conditions:

Temperature Range = _____ Belt Conductivity Required ❑

Oil Mist ❑ Oil Splash ❑ Moisture ❑ Abrasives ❑

Drive Layout

(check one)

❑ Motor Reducer Belt Drive Driven

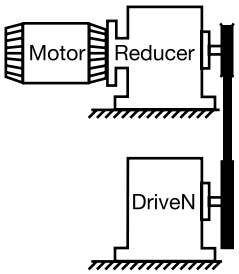

Belt Drive on Reducer Output Shaft

❑ Motor Belt Drive Reducer Driven

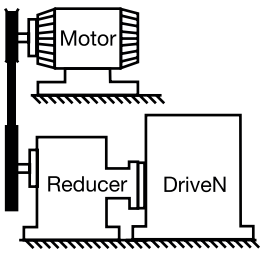

Belt Drive on Reducer Imput Shaft

SELECTION

DODGE®

High-Speed Drive Survey and Energy Savings Worksheet

Customer Information

Company: _____ Distributor: _____

Address: _____ Phone: _____ Fax: _____

_____ E-mail: _____

Drive Information

I.D. of Drive (location, number, etc.) _____

Description of DriveN Equipment _____

Manufacturer of DriveN Equipment _____

Horsepower rating of Motor _____ DriveN HP Load (Peak) _____

(Normal) _____

Motor Frame Size _____ Motor Shaft Dia. _____ DriveN Shaft Dia _____

Speed:

DriveR RPM _____ RPM Measured with Contact or Strobe Tachometer ❑ Yes ❑ No

DriveN RPM _____ RPM Measured with Contact or Strobe Tachometer ❑ Yes ❑ No

Speed Ratio _____ Speed Up _____ or Speed Down _____

Center Distance: Minimum _____ Normal _____ Maximum _____

Existing Drive Components: DriveR _____ DriveN _____

Belts _____ Belt Manufacturer _____

Ambient Conditions:

Temperature _____ Moisture _____ Oil, etc. _____

Abrasives _____ Shock Load _____

Static Conductivity Required? ❑ Yes ❑ No

Maximum Sprocket Diameter (OD) and Width Limitations (for guard clearance):

DriveR: Max. OD _____ Max. Width _____ DriveN: Max. OD _____ Max Width _____

Guard Description _____

Motor Mount:

Double Screw Base? ❑ Yes ❑ No Motor Mounted on Sheet Metal? ❑ Yes ❑ No

Adequate Structure? ❑ Yes ❑ No Floating/Pivot Motor Base? ❑ Yes ❑ No

Start Up Load:

% Motor Rating at Start Up _____ AC Inverter ❑ Yes ❑ No Soft Start? ❑ Yes ❑ No

Duty Cycle:

Number of Starts/Stops _____ times per _____ (hour, day, week, etc.)

Energy Savings Information

Energy Cost per KW-Hour _____

Hours of Operation _____ Hours per Day _____ Days per Week _____ Weeks per Year _____

Selection program available online at ptwizard.com

DODGE®

HT500 Design Data Worksheet

Customer Information

Company: _____ Distributor: _____

Address: _____ Phone: _____ Fax: _____

_____ E-mail: _____

Application Summary

General Description: _____

Product Type: _____ Production Volume: _____

Design Parameters

DriveR:

Motor Type & Description: _____ (Servo, Stepper, DC, AC, etc.) Reversing: _____ (Y/N)

Nominal Motor Torque/Power Output: _____ RPM: _____

Max/Peak Motor Torque/Power Output: _____ RPM: _____

Motor Stall Torque (If applicable): _____ Driver Rotation: _____ (CW / CCW / Rev)

DriveN's/Idlers: (Specify appropriate units for each field; in, mm / hp, kw / lb-ft, lb-in, N-m, etc.)

Description	X	Y	Pulley Diameter	Pitch		Sprocket Teeth	Inside/ Outside	rpm	Load (driveN)	Units	Conditions		Shaft Diameter
											#	% Time	
DriveR													

Note: For complex drive layouts use additional pages as needed

Drive Sketch

Idler Details

Slot Movement:

Spring ☐

Min Position	
X	Y

Max Position	
X	Y

Pivoting Movement:

Spring ☐

Pivot point	
X	Y

Mouvement Angle	
Min Deg	Max Deg

Pivot Arm Radius: (in/mm):

Special Requirements

Product Design Life: _____ Belt Life: _____ Hours/Day: _____ Hours/Year: _____

Pulley Materials:

Prototype _____ Production _____

Ambient Conditions:

Temperature: _____ Moisture: _____ Oil: _____ Static Dissipation: _____ Abrasives: _____

Special Requirements:

Note: This worksheet may be used to survey multipoint drives. For more information on specifying shaft locations in multipoint drive layouts, see Engineering Section I-13 on page PT12-82

Page _____ Of _____

Selection program available online at ptwizard.com

SELECTION

HT500 Drive Selection Procedure (Continued)

1. Calculate the Design Horsepower
2. Select the Belt Pitch
3. Select the Sprockets And Belt Length
4. Select the Proper Belt Width
5. Check and Specify Stock Drive Component
6. Installation and Take-up
7. Calculate Belt Tensioning Requirements

Sample Drive Selection Problem

A gear pump is to be driven by a 30 hp normal torque electric motor with an output speed of 1160 rpm. The gear pump is to be driven at 580 rpm ±5%. The center distance is to be approximately 30 inches, but can be altered ±3 inches, if necessary. The motor shaft has a 2 1/8 inch O.D. and the pump shaft has a 3 inch O.D. The pump will operate 16 hours a day, five days a week. The pump sprocket is limited to a maximum of 18 inches O.D. There are no unusual drive conditions. Design using HT500.

Step 1 Calculate The Design Horsepower

Procedure

To calculate the design horsepower, first determine the relative severity, then select a service factor for the drive. Average hours per day of service also should be considered. Locate the power source and the driveN unit in the Service Factor Table on page PT12-33. The design hp then is determined by multiplying the rated hp (usually the nameplate rating) by the service factor determined above.

Example

Using the Service Factor Table, the driveR can be found in the first group. Since the pump will run 16 hours per day, follow the continuous service column down to the driveN machines group for gear pumps. The recommended Service Factor is 1.7.

Design Horsepower = (Motor Load) x (Service Factor)

= (30) x (1.7)

Design Horsepower = 51 hp

Step 2 Select The Belt Pitch

Procedure

Using the design hp and the rpm of the smaller sprocket, select the belt pitch from the Belt Pitch Selection Guide on page PT12-31.

Example
Design Horsepower = **51 hp**
Motor Speed = **1160 rpm**

Locate 1160 rpm on the "RPM of Faster Shaft" scale on the left side of the chart and move over to where the 51 Design Horsepower line intersects. The intersection falls within the 8mm pitch range, but near the 14mm pitch area. Both 8mm and 14mm pitch drives should be considered.

Step 3 Select The Sprockets and Belt Length

Procedure

A. Determine the speed ratio: The speed ratio can be calculated by dividing the rpm of the faster shaft by the rpm of the slower shaft.

Example

Motor Speed = 1160 rpm
Gear Pump Speed = 580 rpm

$$\textit{Speed Ratio} = \frac{\textit{rpm of faster shaft}}{\textit{rpm of slower shaft}} = \frac{1160}{580} = 2.00$$

B. Select the sprocket combination and belt length: Referring to the Stock Drive Selection Tables on pages PT12-47 - PT12-76, find the proper set of tables for the belt pitch (8mm or 14mm) found in Step 2. Looking down the speed ratio column, find the value which most closely matches the belt drive speed ratio required. Reading across the selected speed ratio line, find the stock DriveR and DriveN sprocket combination available. Reading further across, locate the belt drive center distance which most closely matches the target center distance specified. The belt sizes are listed across the top of the table for each corresponding center distance.

Multiple sprocket combinations will often be available for a given speed ratio. In such cases, selection of the proper drive combination will depend on the center distance required, minimum or maximum required sprocket diameters and the recommended minimum sprocket diameter for electric motors (see Table 4 on page PT12-32).

After selecting possible sprocket combinations and center distances, record the belt length (top of column) and the length factor (bottom of column).

Example

Belt pitch = **8mm and 14mm**

Belt Drive Speed Ratio = **2.00**

Center Distance = **30.00 ± 3.00 in.**

First, refer to the 8mm Pitch Stock Drive Selection Tables on pages PT12-47 - PT12-76. Reading down the Speed Ratio column locate 2.00 on page PT12-57. There are six various sprocket combinations within the allowable center distance range. Of these, two are closest to the desired 30 inches. These are 25 to 50 teeth, and 40 to 80 teeth sprocket combinations. The minimum sprocket diameter of 6.1 inches for a 30 hp motor at 1160 rpm (See Table 4 on page PT12-32) eliminates the 25 to 50 and 40 to 80 teeth sprocket combinations. Therefore, an 8mm pitch drive will not be utilized for this drive system.

Now refer to the 14mm Pitch Stock Drive Selection Tables on pages PT12-63 - PT12-76. Reading down the Speed Ratio Column locate 2.00 on page PT12-71. Several combinations are shown which will meet the 30 ± 3 inch center distance requirement. The maximum O.D. limit of 18 inches on the driveN sprocket eliminates the 56 to 112 teeth combination. The preference for a center distance close to 30 inches would favor the 40 to 80 and 28 to 56 teeth combinations. However, the 4.912 inch pitch diameter of the 28 teeth sprocket is less than the recommended minimum diameter of 6.1 inches for the electric motor. **So the 40 teeth DriveR sprocket, 80 teeth DriveN sprocket, and 2380-14MX (170 teeth) belt** combination is selected. Also note that the **Belt Length Correction Factor is 1.01 with a center distance of 30.11 inches.**

HT500 Drive Selection Procedure (Continued)

C. Check the belt speed. Do not exceed 6500 fpm (feet per minute) with stock sprockets. Belt Speed can be calculated using the following formula:

$$V\ (\text{fpm}) = PD\ (\text{inches}) \times \frac{\text{Speed (rpm)}}{3.82}$$

Example

14mm Pitch Drive with 40 groove driveR:

$$V = \frac{7.018 \times 1160}{3.82} = 2131.1\ \text{fpm}$$

Calculating the belt speed for the drive system being considered shows that the belt speed does not exceed 6500 fpm and can be considered further.

Step 4 Select The Proper Belt Width

Procedure

Horsepower Rating Tables are located on Pages PT12-38 - PT12-46 for standard belt pitches and stock belt widths. The base horsepower rating is given in the upper table as a function of the speed (rpm) of the faster shaft and diameter of the small sprocket. The speed of the faster shaft is located in the left hand column. Across the top are various stock sprocket sizes. The base horsepower rating of a given sprocket, at a specific speed, is the point at which the "rpm" row and the "sprocket size" column intersect.

This base horsepower rating must be corrected for speed down speed ratios, and for the belt length selected. The following formula should be used to calculate the total drive horsepower rating:

Rated Drive Horsepower = [Rated Base Horsepower

+ Additional Horsepower for Speed Ratio]

x (Belt Length Correction Factor)

Referring to the Additional Horsepower for Speed Ratio Factor Table, select a value based upon the drive operating speed and the speed ratio. This value should be added to the base horsepower rating. Multiply the corrected rating by the applicable Belt Length Correction Factor determined in Step 3B or from the Belt Length Correction Factor Table. The drive horsepower rating must equal or exceed design horsepower.

Where there are several choices, space limitations may control the selection. In addition, the following guidelines should be considered:

1. Larger sprockets result in reduced belt width.
2. Larger sprockets yield longer drive service life.
3. Avoid drives where the belt width exceeds the smaller sprocket diameter.
4. Avoid drives where center distance is greater than 8 times the diameter of the smaller sprocket.

Example

Refer to the 14mm pitch Horsepower Rating Table for 20mm Wide belts on page PT12-42. Read down the left hand column for "RPM of Faster Shaft" and locate 1160 rpm. Read the sprocket sizes listed across the top of the table and locate the 40 teeth, 5.614 inch P.D. column. Read across the "RPM" row and down the sprocket size column until the two intersect at a **Rated Base Horsepower of 60.0 hp.**

Next, referencing the Additional Horsepower for Speed Ratio Factor Table, find the listing for a 2.00 speed ratio. An **add-on factor of 3.53 hp** is listed. Then, referencing the Belt Length Correction Factor Table, find the listing for a 2380-14MX belt. A **correction factor of 1.01** is listed.

Calculate the Corrected Horsepower Rating:
Rated Drive Horsepower =
[Rated Base Horsepower + Added HP for Speed Ratio] x
(Belt Length Correction Factor) = [60.0 hp + 3.53 hp] x (1.01)

Rated Drive Horsepower = 64.17 hp

The Drive Horsepower Rating of 64.17 hp exceeds the Design Horsepower target of 51 hp. So, a belt width of 20mm is acceptable.

Step 5 Check and Specify Stock Drive Components

Procedure

A. Check the sprockets selected in Steps 3 and 4 against the design requirements using the dimensions provided in the Sprocket Specification Tables on pages PT12-6 - PT12-13. Use flange diameters when checking against maximum diameter requirements.

Example

From the table on page PT12-9, we find the 14MX-80S-20 driveN Sprocket has an overall flange diameter of 14.620 inches, which is less than the 18 inch maximum diameter specified.

B. Determine the bushing size required for each sprocket and check bore sizes by using the Sprocket Specification Tables. From the Stock Bushing tables on pages PT12-80 - PT12-85, check the bore range and keyway dimensions against the design requirements.

Example

Also from the sprocket data on page PT12-9 we note that the 14MX-40S-20 sprocket requires a 2517 bushing and the 14MX-80S-20 sprocket requires a 3525 bushing. In the bushing table on pages PT12-81 - PT12-83, a 2517 bushing has a bore range of 1/2 to 2-11/16 inches, which includes the 2-1/8 inch bore required for the driveR shaft. The 3525 bushing has a bore range from 1-3/16 to 3-15/16 inches, which includes the 3 inch bore required for the driveN shaft.

C. Specify stock drive components using proper designations.

Example

Stock drive components are as follows:
1 ea. 2380-14MX-20 HT500 belt
1 ea. 14MX-40S-20 driveR sprocket
1 ea. 2517 Bushing with a 2-1/8 in. bore
1 ea. 14MX-80S-20 driveN sprocket
1 ea. 3525 Bushing with a 3 in. bore

HT500 Drive Selection Procedure (Continued)

Step 6 Installation and Takeup

Procedure

Because of its high resistance to elongation (stretch), there is no need to re-tension and take up a HT500 belt drive. However, some adjustment must be provided when installing synchronous belt drives, as with nearly all power transmission systems, to account for manufacturing and assembly tolerances and initial tensioning requirements. Table 11 on page PT12-36 lists the standard installation and take-up requirements for a given belt length. Additional center distance adjustment is needed when installing the belt over flanged sprockets (see Table 11 on page PT12-36.)

Example

As can be seen in the Sprocket Specifications Table on page PT12-9, both of the sprockets are flanged. Therefore, an additional allowance will be needed for installation over flanged sprockets. The total installation and tensioning allowances, are shown below.

Installation Allowance = 0.13 in. + 1.97 in. = 2.10 in

Tensioning Allowance = 0.04 in.

Subtracting this from the nominal center distance value gives a minimum center distance necessary for belt installation of (30.11 inch -2.10 inch) = 28.10 inches. From the problem statement, the center distance can be reduced down to 27.0 in. if necessary. **So, there is sufficient center distance adjustment to easily install the belt.**

Step 7 Calculate Belt Tensioning Requirements

Procedure

A. Calculate base static tension using appropriate Formula 14 on page PT12-34. The m value is listed in Table 10 on page PT12-34.

Example

Belt Pitch = 14mm
Belt Size = 2380-14MX, 170 teeth (93.70 in. P.L.)
Belt Width = 20mm
DriveR Sprocket = 40 teeth (7.018 in. P.D.)
DriveR Shaft Speed = 1160 rpm
DriveN Sprocket = 80 teeth (14.036 in. P.D.)
Actual Center Distance = 30.11 in.
Design Horsepower = 51 hp

$$TST = \frac{20\ HP}{S} + mS2, \text{ pounds}$$

Where:

HP = Horsepower = 30 hp
m = 0.92, constant for 14mm pitch, 20mm wide belt from Table 10 on page PT12-34
S = (Sprocket Diameter) x (Shaft Speed) / 3822.76
= (7.018 in.) x (1160 rpm) / 3822.76
S = 2.13

$$TST = \frac{20\ (30)}{213} + (0.92)(2.13)2$$

TST = 281.69 + 4.17 lb.

TST = 285.86 lb.

B. **Calculate minimum and maximum deflection forces** using Formulas 15 and 16 on page PT12-35. The Y value is listed in Table 10.

Example

a. Calculate the belt span length

$$t = \sqrt{C^2 - \left(\frac{D-d}{2}\right)^2}$$

where:

t = Span Length, inches

C = Center Distance = **30.11 in.**

D = diameter of larger sprocket = **14.036 in. P.D.**

d = diameter of smaller sprocket = **7.018 in. P.D.**

$$t = \sqrt{30.11^2 - \left(\frac{14.036 - 7.0181}{2}\right)^2}$$

b. Calculate Minimum and Maximum belt deflection forces referring to Formulas 15 and 16 on page PT12-35:

$$\textit{Min Deflection Force} = \frac{1.1\text{st} + \left(\frac{t}{L}\right) Y}{16}$$

16

where:

TST = **285.86** pounds static tension as calculated before
t = **29.90** inches span length as calculated before
L = **93.70** inches belt length
Y = **230** (constant for Table 10 on page PT12-34)

$$\text{Min Deflection Force} = \frac{1.1(285.86) + \left(\frac{29.90}{93.70}\right)(230)}{16}$$

Min. Deflection Force = 24.24 lb.

$$\text{Max Deflection Force} = \frac{1.2\text{Tst} + \left(\frac{t}{L}\right) Y}{16}$$

$$\text{Max Deflection Force} = \frac{1.2(685.86) + \left(\frac{29.90}{93.70}\right)(230)}{16}$$

Max. Deflection Force = 26.03 lb.

HT500 Drive Selection Procedure (Continued)

Step 7 Calculate Belt Tensioning Requirements

Procedure - continued

C. Determine the deflection distance using 1/64" per inch of span length.

NOTE: Deflection forces must be applied evenly across the entire belt width.

Example

$$\text{Deflection Distance} = \frac{t}{64}\text{, inches}$$

$$\text{Deflection Distance} = \frac{29.9}{64}$$

D. Applying The Tension:

At the center of span (t), apply a measured force perpendicular to the belt span large enough to deflect the belt 0.47 inch from its normal free position. Be sure that the force is applied evenly across the entire belt width. Note that one sprocket should be free to rotate during the belt tensioning process.

Compare the measured deflection force with the range of minimum to maximum deflection forces calculated before.

1. **If the measured deflection force is less than the minimum recommended deflection force, the belt should be tightened.**
2. **If the measured deflection force is greater than the maximum recommended deflection force, the belt should be loosened.**

Example

When the Gear Pump belt drive is properly tensioned, a belt span deflection of 0.47 in. should require a deflection force within the range of 22.34 to 24.12 lb.

Belt Pitch Selection Guide

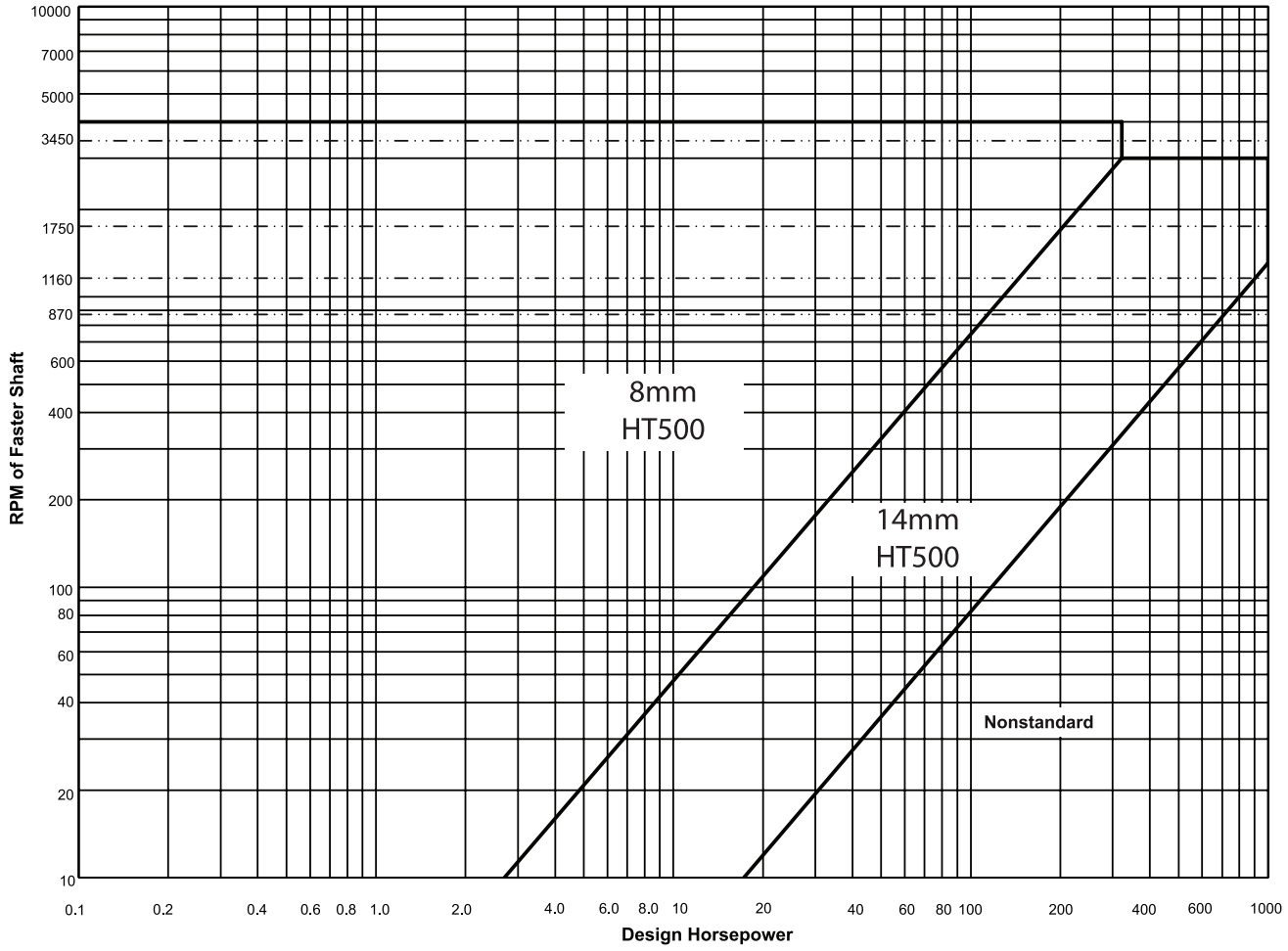

SELECTION

Table 4
Minimum Recommended Sprocket Pitch Diameters for General Purpose Electric Motors Synchronous Belt Drives

For a given motor horsepower and speed, the total belt pull is related to the motor sprocket size. As this size decreases, the total belt pull increases. Therefore, to limit the resultant load on motor shaft and bearings, NEMA lists minimum sprocket sizes for the various motors. The sprocket on the motor (DriveR sheave) should be at least as large as the diameter specified in Table No. 4.

	Motor RPM (60 Cycle and 50 Cycle Electric Motors)						
Motor Horsepower	**575 485***	**690 575***	**870 725***	**1160 950***	**1750 1425***	**3450 2850***	**Motor Horsepower**
1/2	—	—	2.0	—	—	—	1/2
3/4	—	—	2.2	2.0	—	—	3/4
1	2.7	2.3	2.2	2.2	2.0	—	1
1-1/2	2.7	2.7	2.2	2.2	2.2	2.0	1-1/2
2	3.4	2.7	2.7	2.2	2.2	2.2	2
3	4.1	3.4	2.7	2.7	2.2	2.2	3
5	4.1	4.1	3.4	2.7	2.7	2.2	5
7-1/2	4.7	4.1	4.0	3.4	2.7	2.7	7-1/2
10	5.4	4.7	4.0	4.0	3.4	2.7	10
15	6.1	5.4	4.7	4.0	4.0	4.0	15
20	7.4	6.1	5.4	4.7	4.0	2.2	20
25	8.1	7.4	6.1	5.4	4.0	4.0	25
30	9.0	8.1	6.1	6.1	4.7	—	30
40	9.0	9.0	7.4	6.1	5.4	—	40
50	9.9	9.0	7.6	7.4	6.1	—	50
60	10.8	9.9	9.0	7.2	6.7	—	60
75	12.6	11.7	8.6	9.0	7.7	—	75
100	16.2	13.5	10.8	9.0	7.7	—	100
125	18.0	16.2	13.5	10.8	9.5#	—	125
150	19.8	18.0	16.2	11.7	9.5	—	150
200	19.8	19.8	19.8	—	11.9	—	200
250	19.8	19.8	—	—	—	—	250
300	24.3	24.3	—	—	—	—	300

* These RPM are for 50 cycle electric motors.
\# Use 8.6 for Frame Number 444 T only.

Data in the white area of Table No. 4 are from NEMA Standard MG-1-14-42, June, 1972. Data in the gray area are from MG-1-14-43, January, 1968. The blue area is a composite of electric motor manufacturers data. They are generally conservative, and specific motors and bearings may permit the use of a smaller motor sprocket. Consult the motor manufacturer.

DriveN Machine	DriveR					
The driveN machines listed below are representative samples only. Select a driveN machine whose load characteristics most closely approximate those of the machine being considered.	AC Motors: Normal Torque, Squirrel Cage, Synchronous, Split Phase, Inverter Controlled DC Motors: Shunt Wound, Stepper Motors Engines: Multiple Cylinder Internal Combustion.			AC Motors: High Torque, High Slip, Repulsion-Induction, Single Phase, Series, Wound, Slip Ring. DC Motors: Series Wound, Compound, Wound, Servo Motors. Engines: Single Cylinder Internal, Combustion. Line shafts Clutches		
	Intermittent Service	**Normal Service**	**Continuous Service**	**Intermittent Service**	**Normal Service**	**Continuous Service**
	Up to 8 Hours Daily or Seasonal	**8-16 Hours Daily**	**16-24 Hours Daily**	**Up to 8 Hours Daily or Seasonal**	**8-16 Hours Daily**	**16-24 Hours Daily**
Display, Dispensing Equipment Instrumentation Measuring Equipment Medical Equipment Office, Projection Equipment	1.0	1.2	1.4	1.2	1.4	1.6
Appliances, Sweepers, Sewing Machines Screens, Oven Screens, Drum, Conical Woodworking Equipment: (Light) Band Saws, Drills, Lathes	1.1	1.3	1.5	1.3	1.5	1.7
Agitators for Liquids Conveyors: Belt, Light Package Drill Press, Lathes, Saws Laundry Machinery Woodworking Equipment: (Heavy) Circular Saws, Joiners, Planers	1.2	1.4	1.6	1.6	1.8	2.0
Agitators: Semi-liquid Compressors: Centrifugal Conveyor Belt: Coal, Ore, Sand Dough Mixers Line Shafts Machine Tools: Grinder, Shaper Boring Mill, Milling Machines Paper Machinery (except Pulpers) Presses, Punches, Shears Printing Machinery Pumps: Centrifugal, Gear Screens: Revolving, Vibratory	1.3	1.5	1.7	1.6	1.8	2.0
Brick Machinery (except Pug Mills) Conveyor: Apron, Pan, Bucket, Elevator Extractors, Washers Fans, Centrifugal Blowers Generators & Exciters Hoists Rubber Calendar, Mills, Extruders	1.4	1.6	1.8	1.8	2.0	2.2
Centrifuges Screw Conveyors Hammer Mills Paper Pulpers Textile Machinery	1.5	1.7	1.9	1.9	2.1	2.3
Blowers: Positive Displacement Mine Fans Pulverizers	1.6	1.8	2.0	2.0	2.2	2.4
Compressors, Reciprocating Crushers: Gyratory, Jaw, Roll Mills: Ball, Rod, Pebble, etc. Pumps, Reciprocating Saw Mill Equipment	1.7	1.9	2.1	2.1	2.3	2.5

SELECTION

These tolerances are for reference only. For fixed center drive applications and special tolerances, contact Baldor•Dodge Power Transmission Product Application.

Stock Belt Center Distance Tolerences

Belt Length (mm) (In)	Center Distance Tolerance (mm) (In)
over 127 **5** to 254 **10**	± 0.20 **.008**
over 254 **10** to 381 **15**	± 0.23 **.009**
over 381 **15** to 508 **20**	± 0.25 **.010**
over 508 **20** to 762 **30**	± 0.30 **.012**
over 762 **30** to 1016 **40**	± 0.33 **.013**
over 1016 **40** to 1270 **50**	± 0.38 **.015**
over 1270 **50** to 1524 **60**	± 0.41 **.016**
over 1524 **60** to 1778 **70**	± 0.43 **.017**
over 1778 **70** to 2032 **80**	± 0.46 **.018**
over 2032 **80** to 2286 **90**	± 0.49 **.019**
over 2286 **90** to 2540 **100**	± 0.52 **.020**
over 2540 **100** to 2794 **110**	± 0.54 **.021**
over 2794 **110** to 3048 **120**	± 0.56 **.022**
over 3048 **120** to 3302 **130**	± 0.58 **.023**
over 3302 **130** to 3556 **140**	± 0.60 **.024**
over 3556 **140** to 3810 **150**	± 0.63 **.025**
over 3810 **150** to 4064 **160**	± 0.66 **.026**
over 4064 **160** to 4318 **170**	± 0.69 **.027**
over 4318 **170** to 4572 **180**	± 0.72 **.028**
over 4572 **180**	add ± .03 **.001** for every .254 **10** increment

Standard Belt Tensioning Procedure

When installing a belt:

A. Be sure it is tensioned adequately to prevent tooth jumping (ratcheting) under the most severe load conditons which the drive will encounter during operation.

B. Avoid extrernely high tension which can reduce belt life and possibly damage bearings, shafts and other drive cornponents.

The proper way to check belt tension is to use a tension tester. Baldor has a variety of tension testers, ranging from the simple spring scale type tester to the sophisticated Sonic Tension Meter. The spring scale type tester is used by measuring how much force is requirec to deflect the belt at the center of his span by a specified distance (force deflection method), as shown in the sketch below.

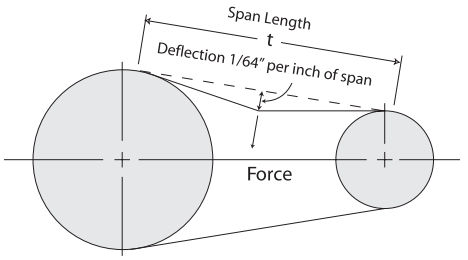

The Sonic Tension Meter measures the vibration of the belt span and instantly converts the vibration frequency into belt static tension (span vibration method).

When you wish to use a numerical method for calculating recommended belt installation tension values, the following procedure may be used.

STEP 1: Calculate the required base static installation tension.

Use Formula 14 to calculate the required base static installation tension.

Formula 14

$$T_{SI} = \frac{20HP}{S} + mS^2$$

Where T_{SI} = base static installation tension. pounds
HP = Horsepower
$S = \frac{PD \times RPM}{3820}$
m = Value from table 10
PD = Sprocket Pitch Diameter, inches
RPM = Revolutions per minute of same sprocket

Table 10

Pitch	Belt Width	m	Y	minimum T_{si} (lb) per span
8mm	12mm	0.33	65	28
	21mm	0.57	113	49
	36mm	0.97	194	84
	62mm	1.68	335	145
14mm	20mm	0.92	230	119
	37mm	1.69	426	220
	68mm	3.11	782	405
	90mm	4.12	1035	536
	125mm	5.72	1438	744

Because of the high performance capabilities of HT500 belts, it is possible to design drives that have significantly greater load than are necessary to carry the actual design load. Consequently. Formula 14 can provide T_{st} values less than are necessary for the belt to operate properly, resulting in poor belt performance and reduced service life. If a more appropriately sized drive cannot be designed, minimum recommended T_{st} values are provided in Table 10 to assure that the belts function properly when lightly loaded.

Always use the greater T_{st} value; i.e., from T_{st} Formula 14 or Table 10.

NOTE:When applying static belt tension values directly, multiply the required base static installation tension (T_{st}) calculated in Formula 14 by the following factors:

For New Belts:

Minimum Static Tension = Base Static Tension X 1.1
Maximum Static Tension = Base Static Tension X 1.2

For Used Belts:

Minimum Static Tension = Base Static Tension X 0.8
Maximum Static Tension = Base Static Tension X 0.9

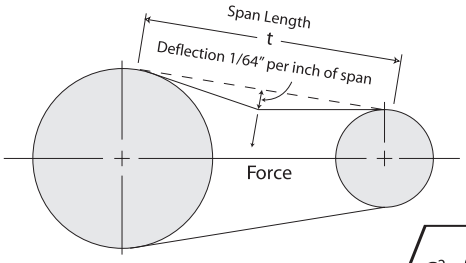

$$t = \sqrt{C^2 - \left(\frac{D-d}{2}\right)}$$

STEP 2: Calculate the minimum and maximum recommended deflection forces.

A. Measure the span length of your drive (see sketch).
B. New belt minimum recommended force:

Formula 15

$$\text{deflection force, Min} = \frac{1.1\,T_{st} + \left(\frac{t}{L}\right) Y}{16}\text{,lb}$$

Formula 16

$$\text{deflection force, Max} = \frac{1.2\,T_{st} + \left(\frac{t}{L}\right) Y}{16}\text{,lb}$$

Where:

T_{st} = Base Static tension, lbf
t = span length, inches
L = belt pitch length, inches
Y = constant from Table 10

USED BELT NOTE: For re-installation of a used belt, a recommended tension of 0.8 T_{st} to 0.9 T_{st} value should be used in calculating the deflection forces, instead of the 1.1 T_{st} to 1.2 T_{st} shown for new belts.

STEP 3: Applying the tension

Force deflection tension method

A. At the center of the span (t) apply a force perpendicular to the span large enough to deflect the belt on the drive 1/64 inch per inch of span length from its normal position. One sprocket should be free to rotate. Be sure the force is applied evenly across the entire belt width. If the belt is a wide synchronous belt, place a piece of steel or angle iron across the belt width and deflect the entire width of the belt evenly.

B. Compare this deflection force with the range of forces calculated in Step 2.

1. If it is less than the minimum recommended deflection force, the belt should be tightened.
2. If it is greater than the maximum recommended deflection force, the belt should be loosened.

Span vibration tension method

The Sonic Tension Meter detects the vibration frequency in the belt span, and converts that measurement into the actual static tension in the belt.

To use the Sonic Tension Meter, begin by entering the belt unit weight, belt width, and the span length. To measure the span vibration, press the "'Measure" button on the meter, tap the belt span, and hold the microphone approximately 1/4" away from the back of the belt. The Sonic Tension Meter will display the static tension, and can also display the span vibration frequency.

The belt unit weights for use with the Sonic Tension Meter are shown in the following table.

Belt Product Family	Belt Cross section	Adjusted Belt Weight (grams/meter)
HT500 Belt	8mm	4.7
	14mm	7.9

Rim Speed Limits per MPTA Standard

Product Material	Maximum allowable RIM speed in FPM	
	Web / Arm Style	Block Style
Class 30 Gray Iron	6500	7500
Ductile Iron 65	8000	10000
Ductile Iron 80	10000	13000
Steel (1018)	9000	11000

(FPM=.626 x Dia. (inches) x RPM)

NOTE: Above rim speed values are maximum for normal considerations. In some cases these values may be exceeded. Consult factory and include complete details of proposed application.

Dynamic balance RPM = for Sheave/Sprocket ◊ $\frac{15600}{\sqrt{\text{Dia x Face Width}}}$

◊ Note: MPTA recommends Dynamic balance when application RPM exceeds this value

SELECTION

Center Distance Allowances for Installation and Tensioning

Since fixed center drives are not recommended, center distance allowances for a HT500 belt drive are necessary to assure that the belt can be installed without damage and then tensioned correctly. The standard installation allowance is the minimum decrease in center distance required to install a belt when flanged sprockets are removed from their shafts for belt installation. This is shown in the first column of Table 11. This table also lists the minimum increase in center distance required to assure that the belt can be properly tensioned overs its normal life time. If a belt is to be installed over flanged sprockets without removing them, the additional center distance allowance for installation shown in the second table below must be added to the first table data.

Table 11

Center Distance Allowance For Installation and Tensioning

Belt Length (mm) **(In)**	**Standard Installation Allowance (Flanged Sprocket removed for installation)** (mm) **(In)**	**Tension Allowance** (mm) **(In)**
up to 125 **5**	0.5 **0.02**	0.5 **0.02**
over 125 **5** to 250 **10**	0.8 **0.03**	0.8 **0.03**
over 250 **10** to 500 **20**	1.0 **0.04**	0.8 **0.03**
over 500 **20** to 1000 **40**	1.8 **0.07**	0.8 **0.03**
over 1000 **40** to 1780 **70**	2.8 **0.10**	0.8 **0.04**
over 1780 **70** to 2540 **100**	3.3 **0.13**	1.0 **0.04**
over 2540 **100** to 3300 **130**	4.1 **0.16**	1.3 **0.05**
over 3300 **130** to 4600 **180**	4.8 **0.19**	1.3 **0.05**
over 4600 **60** to 6900 **70**	5.6 **0.22**	1.3 **0.05**

Addtional Center Distance Allowance For Installation Over Flanged Sprockets*

(Add to Installation Allowance in table No 11)

Pitch	**One Sprocket** (mm) **Flanged** **(In)**	**Both Sprockets** (mm) **Flanged** **(In)**
8mm	21.8 **0.86**	33.3 **1.31**
14mm	31.2 **1.23**	50.0 **1.97**

*For drives that require installation of the belt over one sprocket at a time, use the value for "Both Sprockets Flanged"

Drive alignment

Provision should be made for center distance adjustment, according to the two tables on this page, or to change the idler position so the belt can be slipped easily onto the drive. When installing a belt, never force it over the flange. This will cause internal damage to the belt tensile member.

Synchronous belts typically are made with high modulus tensile members which provide length stability over the belt life. Consequently, misalignment does not allow equal load distribution across the entire belt top width. In a misaligned drive, the load is being carried by only a small portion of the belt top width, resulting in uneven belt wear and premature tensile failure.

There are two types of misalignment: parallel and angular (See Fig.7). Parallel misalignment is where the driveR and driveN shafts are parallel, but the two sprockets lie in different planes. When the two shafts are not parallel, the drive is angularly misaligned.

A fleeting angle is the angle at which the belt enters and exits the sprocket, and equals the sum of the parallel and angular misalignments.

Any degree of sprocket misalignment will result in some reduction of belt life, which is not accounted for in the normal drive design procedure. Misalignment of all synchronous belt drives should not exceed 1/4" or 1 /16" per foot of linear distance. Misalignment should be checked with a good straight edge or by using a laser alignment tool. The straight edge tool should be applied from driveR to driveN, and then from driveN to driveR so that the total effect of parallel and angular misalignment is made visible.

Figure 7

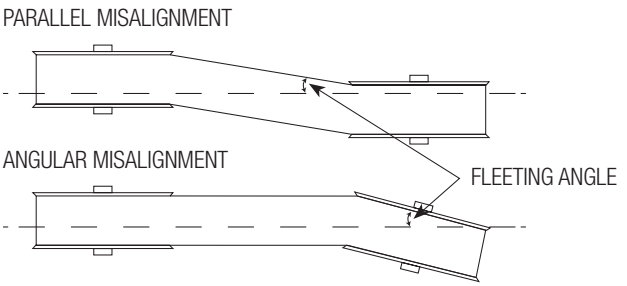

Drive misalignment can also cause belt tracking problems. However, light flange contact by the belt is normal and won't affect performance.

For those drives in which the center distance is greater than eight times the small sprocket diameter, belt tracking can be a problem. In these cases, the parallel position of the two sprockets may need to be adjusted until only one flange guides the belt in the system and the belt tracks fully on all sprockets. Regardless of the drive center distance, the optimum drive performance will occur with the belt lightly contacting one flange in the system. The worst case is for the belt to contact flanges on opposite sides of the system. This traps the belt between opposite flanges and can force the belt into undesirable parallel misalignment.

NOTES

SELECTION

HT500 Basic HP Ratings - 8mm

8M-12	Rated Horsepower for Small Sprocket (Number of Teeth and Pitch Diameter, Inches)																							
RPM	22	24	25	26	27	28	29	30	31	32	33	34	35	36	37	38	39	40	41	42	44	45	48	50
Small Shaft	2.210	2.410	2.506	2.610	2.707	2.810	2.907	3.010	3.108	3.210	3.308	3.410	3.509	3.610	3.709	3.810	3.910	4.010	4.110	4.211	4.410	4.511	4.810	5.013
10	0.15	0.17	0.18	0.19	0.20	0.21	0.22	0.22	0.23	0.24	0.25	0.26	0.27	0.28	0.29	0.29	0.30	0.31	0.32	0.33	0.35	0.36	0.38	0.40
20	0.23	0.26	0.27	0.29	0.30	0.32	0.33	0.35	0.36	0.38	0.39	0.41	0.42	0.44	0.45	0.47	0.48	0.50	0.51	0.53	0.55	0.57	0.61	0.64
40	0.39	0.44	0.47	0.49	0.52	0.54	0.57	0.59	0.62	0.64	0.67	0.69	0.72	0.74	0.77	0.79	0.82	0.84	0.87	0.89	0.94	0.97	1.04	1.09
50	0.46	0.52	0.55	0.58	0.61	0.64	0.67	0.70	0.73	0.76	0.79	0.82	0.85	0.88	0.91	0.94	0.97	1.00	1.03	1.06	1.12	1.15	1.24	1.30
60	0.53	0.60	0.64	0.67	0.71	0.74	0.78	0.81	0.85	0.88	0.92	0.96	1.00	1.03	1.07	1.10	1.14	1.17	1.21	1.24	1.31	1.34	1.44	1.51
100	0.80	0.91	0.96	1.02	1.07	1.13	1.18	1.24	1.29	1.35	1.40	1.46	1.51	1.57	1.62	1.68	1.73	1.79	1.85	1.90	2.01	2.07	2.23	2.34
200	1.42	1.63	1.74	1.84	1.95	2.05	2.16	2.26	2.36	2.46	2.57	2.67	2.77	2.87	2.97	3.07	3.18	3.28	3.38	3.48	3.68	3.78	4.08	4.28
300	2.02	2.32	2.46	2.62	2.77	2.92	3.07	3.22	3.36	3.51	3.66	3.81	3.96	4.11	4.25	4.40	4.54	4.69	4.84	4.99	5.28	5.43	5.86	6.15
400	2.58	2.98	3.18	3.37	3.57	3.76	3.96	4.15	4.34	4.53	4.73	4.92	5.11	5.30	5.50	5.69	5.88	6.07	6.26	6.45	6.83	7.02	7.59	7.97
500	3.13	3.62	3.85	4.10	4.33	4.58	4.81	5.06	5.29	5.53	5.76	6.00	6.24	6.48	6.71	6.95	7.18	7.41	7.65	7.88	8.35	8.58	9.27	9.74
600	3.67	4.24	4.53	4.81	5.10	5.38	5.66	5.94	6.23	6.51	6.79	7.07	7.35	7.62	7.90	8.18	8.46	8.73	9.01	9.29	9.84	10.11	10.93	11.48
700	4.20	4.86	5.17	5.51	5.83	6.17	6.49	6.82	7.14	7.47	7.78	8.11	8.43	8.75	9.07	9.39	9.71	10.03	10.35	10.67	11.30	11.62	12.57	13.20
800	4.71	5.46	5.83	6.20	6.57	6.94	7.31	7.68	8.05	8.41	8.78	9.14	9.51	9.87	10.23	10.59	10.95	11.31	11.67	12.03	12.75	13.11	14.18	14.89
870	5.07	5.88	6.27	6.68	7.07	7.48	7.86	8.27	8.66	9.07	9.45	9.85	10.24	10.64	11.03	11.42	11.81	12.20	12.59	12.98	13.75	14.14	15.30	16.08
1000	5.72	6.64	7.10	7.55	8.01	8.46	8.92	9.37	9.82	10.27	10.72	11.16	11.61	12.06	12.51	12.95	13.39	13.83	14.27	14.72	15.60	16.04	17.35	18.22
1160	6.51	7.56	8.07	8.61	9.11	9.65	10.16	10.69	11.19	11.72	12.23	12.75	13.26	13.78	14.29	14.80	15.30	15.81	16.32	16.82	17.83	18.34	19.84	20.85
1200	6.70	7.79	8.33	8.87	9.41	9.95	10.49	11.02	11.55	12.08	12.61	13.14	13.67	14.20	14.73	15.25	15.78	16.30	16.82	17.35	18.39	18.91	20.46	21.49
1400	7.66	8.92	9.52	10.16	10.76	11.40	12.00	12.64	13.24	13.87	14.47	15.09	15.69	16.31	16.91	17.52	18.12	18.73	19.33	19.93	21.13	21.73	23.51	24.71
1600	8.60	10.02	10.73	11.43	12.14	12.84	13.54	14.23	14.93	15.62	16.31	17.00	17.69	18.38	19.07	19.75	20.43	21.11	21.79	22.47	23.83	24.50	26.52	27.86
1750	9.30	10.84	11.58	12.37	13.11	13.89	14.63	15.41	16.15	16.92	17.66	18.42	19.16	19.91	20.65	21.40	22.14	22.88	23.62	24.36	25.83	26.57	28.75	30.21
2000	10.44	12.18	13.05	13.91	14.77	15.63	16.49	17.35	18.20	19.05	19.90	20.75	21.60	22.44	23.28	24.12	24.96	25.79	26.62	27.45	29.11	29.94	32.41	34.04
2400	12.21	14.27	15.26	16.32	17.31	18.36	19.34	20.38	21.37	22.40	23.38	24.40	25.38	26.39	27.37	28.37	29.36	30.35	31.33	32.32	34.27	35.25	38.15	40.09
2800	13.94	16.32	17.50	18.67	19.85	21.02	22.19	23.35	24.51	25.66	26.82	27.97	29.12	30.26	31.40	32.53	33.67	34.80	35.93	37.05	39.30	40.41	43.74	45.93
3200	15.63	18.31	19.59	20.97	22.25	23.62	24.90	26.25	27.53	28.86	30.14	31.46	32.74	34.04	35.31	36.60	37.87	39.15	40.42	41.69	44.21	45.48	49.20	51.69
3500	16.87	19.78	21.23	22.67	24.11	25.54	26.97	28.39	29.81	31.22	32.63	34.03	35.43	36.82	38.21	39.60	40.98	42.36	43.73	45.09	47.82	49.17	53.21	55.85
4000	18.89	22.17	23.74	25.43	27.00	28.67	30.23	31.88	33.44	35.06	36.62	38.23	39.78	41.37	42.92	44.48	46.03	47.58	49.12	50.65	53.70	55.23	59.72	62.71
4500	20.85	24.51	26.32	28.13	29.93	31.72	33.50	35.28	37.05	38.82	40.57	42.32	44.06	45.79	47.52	49.24	50.95	52.65	54.34	56.03	59.40	61.06	66.03	49.52
5000	22.77	26.79	28.70	30.76	32.67	34.70	36.60	38.61	40.50	42.47	44.36	46.31	48.18	50.10	51.97	53.86	55.72	57.59	59.43	61.27	64.92	66.74	72.11	
5500	24.65	29.01	31.17	33.33	35.47	37.61	39.73	41.85	43.95	46.04	48.12	50.19	52.24	54.29	56.32	58.35	60.36	62.37	64.35	66.32	70.27	52.70		

8M-12	Rated Horsepower for Small Sprocket (Number of Teeth and Pitch Diameter, Inches)										Additional HP required per belt for speed ratio of speed down drive									
RPM	53	56	60	63	64	67	71	72	75	80	1.00 to	1.03 to	1.06 to	1.11 to	1.16 to	1.22 to	1.31 to	1.44 to	1.65 to	2.16
Small Shaft	5.314	5.610	6.015	6.316	6.420	6.717	7.118	7.220	7.519	8.020	1.02	1.05	1.10	1.15	1.21	1.30	1.43	1.64	2.15	and over
10	0.42	0.45	0.49	0.51	0.52	0.55	0.58	0.59	0.62	0.66										
20	0.68	0.72	0.78	0.82	0.84	0.88	0.94	0.95	0.99	1.06										
40	1.16	1.23	1.33	1.41	1.43	1.50	1.60	1.62	1.70	1.82										
50	1.39	1.48	1.60	1.69	1.72	1.81	1.92	1.95	2.04	2.18										
60	1.62	1.72	1.86	1.97	2.00	2.10	2.24	2.27	2.37	2.54										
100	2.50	2.66	2.88	3.03	3.09	3.25	3.46	3.51	3.67	3.93										
200	4.58	4.88	5.28	5.58	5.68	5.98	6.37	6.47	6.76	7.25	0.00	0.01	0.01	0.02	0.03	0.04	0.04	0.05	0.06	0.06
300	6.58	7.01	7.59	8.02	8.17	8.59	9.16	9.31	9.73	10.43	0.00	0.01	0.02	0.02	0.03	0.04	0.05	0.06	0.06	0.07
400	8.53	9.09	9.84	10.40	10.59	11.15	11.89	12.07	12.62	13.53	0.00	0.01	0.02	0.03	0.04	0.05	0.06	0.07	0.07	0.08
500	10.43	11.11	12.04	12.72	12.96	13.63	14.54	14.77	15.44	16.56	0.00	0.01	0.03	0.04	0.06	0.07	0.08	0.1	0.11	0.13
600	12.29	13.11	14.20	15.02	15.29	16.09	17.16	17.43	18.23	19.55	0.00	0.02	0.03	0.05	0.06	0.08	0.1	0.11	0.13	0.14
700	14.14	15.07	16.33	17.26	17.58	18.49	19.73	20.04	20.95	22.48	0.00	0.02	0.04	0.06	0.07	0.09	0.11	0.13	0.15	0.17
800	15.95	17.01	18.43	19.50	19.85	20.89	22.28	22.63	23.66	25.38	0.00	0.02	0.05	0.07	0.1	0.12	0.14	0.17	0.19	0.21
870	17.23	18.36	19.89	21.03	21.42	22.53	24.04	24.42	25.53	27.39	0.00	0.03	0.05	0.08	0.11	0.14	0.17	0.19	0.22	0.25
1000	19.53	20.83	22.57	23.88	24.31	25.59	27.29	27.71	28.97	31.08	0.00	0.03	0.06	0.1	0.13	0.16	0.19	0.22	0.25	0.29
1160	22.35	23.82	25.82	27.30	27.81	29.25	31.20	31.70	33.14	35.56	0.00	0.04	0.08	0.12	0.16	0.2	0.24	0.28	0.32	0.36
1200	23.02	24.56	26.62	28.16	28.67	30.18	32.19	32.69	34.18	36.67	0.00	0.05	0.09	0.14	0.18	0.23	0.27	0.32	0.37	0.41
1400	26.49	28.24	30.60	32.35	32.96	34.68	36.99	37.58	39.29	42.14	0.00	0.05	0.1	0.14	0.19	0.24	0.29	0.33	0.38	0.43
1600	29.86	31.86	34.52	36.52	37.18	39.13	41.73	42.38	44.31	47.52	0.00	0.06	0.11	0.16	0.22	0.27	0.33	0.38	0.44	0.49
1750	32.39	34.53	37.42	39.57	40.31	42.40	45.21	45.93	48.01	51.49	0.00	0.06	0.11	0.17	0.22	0.28	0.33	0.39	0.45	0.5
2000	36.49	38.93	42.18	44.62	45.43	47.80	50.96	51.75	54.09	57.99	0.00	0.06	0.13	0.19	0.25	0.32	0.38	0.45	0.51	0.57
2400	42.97	45.81	49.62	52.45	53.43	56.17	59.88	60.82	63.53	68.08	0.00	0.07	0.14	0.2	0.28	0.35	0.42	0.48	0.55	0.62
2800	49.22	52.50	56.85	60.10	61.19	64.34	68.54	69.59	72.67	77.80	0.00	0.07	0.14	0.22	0.29	0.36	0.43	0.5	0.57	0.64
3200	55.38	59.02	63.87	67.48	68.72	72.18	76.86	78.05			0.00	0.08	0.16	0.24	0.32	0.4	0.48	0.56	0.64	0.72
3500	59.82	63.78	68.99	72.90	74.20	46.38					0.00	0.09	0.18	0.28	0.37	0.46	0.55	0.65	0.74	0.83
4000	67.13	71.50	35.72								0.00	0.14	0.28	0.42	0.56	0.7	0.84	0.97	1.11	1.25
4500											0.00	0.16	0.32	0.48	0.64	0.8	0.95	1.11	1.27	1.43
5000											0.00	0.24	0.48	0.72	0.95	1.19	1.43	1.67	1.91	2.15
5500											0.00	0.28	0.55	0.82	1.1	1.37	1.65	1.92	2.2	2.47
											0.00	0.32	0.64	0.96	1.27	1.59	1.91	2.23	2.55	2.86
											0.00	0.36	0.72	1.08	1.43	1.79	2.15	2.51	2.87	3.22
											0.00	0.4	0.79	1.19	1.59	1.99	2.39	2.78	3.18	3.58
											0.00	0.44	0.87	1.31	1.75	2.19	2.63	3.06	3.5	3.94

DODGE®

HT500 Basic HP Ratings - 8mm

8M-21	Rated Horsepower for Small Sprocket (Number of Teeth and Pitch Diameter, Inches)																							
RPM Small Shaft	22	24	25	26	27	28	29	30	31	32	33	34	35	36	37	38	39	40	41	42	44	45	48	50
	2.210	2.410	2.506	2.610	2.707	2.810	2.907	3.010	3.108	3.210	3.308	3.410	3.509	3.610	3.709	3.810	3.910	4.010	4.110	4.211	4.410	4.511	4.810	5.013
10	0.26	0.30	0.32	0.33	0.35	0.37	0.38	0.39	0.40	0.42	0.44	0.46	0.47	0.49	0.50	0.51	0.53	0.54	0.56	0.58	0.61	0.63	0.67	0.70
20	0.40	0.46	0.48	0.51	0.53	0.56	0.59	0.61	0.64	0.67	0.69	0.72	0.74	0.77	0.80	0.82	0.85	0.88	0.90	0.92	0.96	0.99	1.07	1.12
40	0.68	0.77	0.81	0.86	0.90	0.95	0.99	1.03	1.08	1.12	1.16	1.21	1.25	1.30	1.34	1.38	1.43	1.47	1.51	1.56	1.65	1.69	1.82	1.90
50	0.81	0.91	0.96	1.02	1.07	1.12	1.17	1.23	1.28	1.33	1.38	1.44	1.49	1.54	1.59	1.65	1.70	1.75	1.80	1.86	1.96	2.01	2.17	2.28
60	0.93	1.05	1.11	1.17	1.23	1.30	1.36	1.42	1.48	1.54	1.61	1.68	1.74	1.80	1.86	1.93	1.99	2.05	2.11	2.17	2.29	2.35	2.52	2.64
100	1.40	1.59	1.69	1.79	1.88	1.98	2.07	2.17	2.26	2.36	2.46	2.56	2.65	2.75	2.84	2.94	3.04	3.13	3.23	3.33	3.52	3.62	3.90	4.09
200	2.49	2.85	3.04	3.22	3.40	3.59	3.77	3.96	4.13	4.31	4.49	4.67	4.85	5.02	5.20	5.37	5.56	5.74	5.92	6.09	6.44	6.62	7.14	7.49
300	3.54	4.06	4.31	4.59	4.84	5.11	5.37	5.64	5.88	6.14	6.40	6.67	6.93	7.19	7.44	7.70	7.95	8.21	8.47	8.73	9.24	9.50	10.26	10.77
400	4.52	5.22	5.56	5.90	6.24	6.58	6.92	7.26	7.60	7.93	8.27	8.61	8.94	9.28	9.62	9.96	10.29	10.62	10.96	11.29	11.95	12.29	13.28	13.94
500	5.48	6.34	6.74	7.18	7.58	8.02	8.42	8.86	9.26	9.68	10.08	10.50	10.92	11.34	11.75	12.16	12.56	12.97	13.38	13.79	14.61	15.02	16.22	17.04
600	6.42	7.42	7.92	8.42	8.92	9.42	9.91	10.40	10.89	11.39	11.88	12.37	12.85	13.34	13.83	14.32	14.80	15.28	15.76	16.25	17.22	17.70	19.13	20.08
700	7.35	8.51	9.05	9.64	10.20	10.80	11.35	11.94	12.49	13.07	13.62	14.19	14.75	15.31	15.87	16.43	16.99	17.55	18.11	18.67	19.78	20.34	22.00	23.11
800	8.24	9.56	10.20	10.85	11.50	12.15	12.79	13.44	14.08	14.72	15.36	16.00	16.63	17.27	17.90	18.53	19.16	19.79	20.42	21.05	22.31	22.94	24.82	26.05
870	8.87	10.29	10.96	11.69	12.37	13.09	13.76	14.47	15.16	15.87	16.54	17.24	17.92	18.62	19.30	19.99	20.67	21.35	22.03	22.71	24.06	24.75	26.78	28.13
1000	10.01	11.62	12.42	13.21	14.01	14.81	15.60	16.40	17.19	17.97	18.75	19.53	20.32	21.11	21.88	22.66	23.43	24.20	24.98	25.75	27.30	28.07	30.36	31.89
1160	11.39	13.23	14.12	15.07	15.95	16.89	17.77	18.71	19.59	20.51	21.40	22.31	23.20	24.12	25.00	25.90	26.78	27.67	28.56	29.44	31.20	32.09	34.72	36.49
1200	11.73	13.63	14.58	15.52	16.47	17.41	18.35	19.29	20.21	21.14	22.07	23.00	23.92	24.85	25.77	26.69	27.61	28.53	29.44	30.35	32.18	33.09	35.81	37.60
1400	13.41	15.61	16.66	17.78	18.83	19.95	21.01	22.12	23.17	24.27	25.32	26.41	27.46	28.54	29.60	30.66	31.72	32.78	33.83	34.88	36.98	38.03	41.14	43.24
1600	15.05	17.54	18.77	20.00	21.24	22.47	23.69	24.90	26.12	27.34	28.54	29.75	30.96	32.17	33.36	34.56	35.75	36.94	38.13	39.32	41.70	42.88	46.41	48.75
1750	16.28	18.97	20.26	21.65	22.94	24.31	25.60	26.97	28.26	29.61	30.90	32.24	33.52	34.84	36.14	37.45	38.74	40.04	41.34	42.63	45.20	46.50	50.31	52.88
2000	18.27	21.32	22.83	24.34	25.85	27.35	28.86	30.36	31.85	33.34	34.83	36.31	37.79	39.27	40.74	42.21	43.67	45.13	46.59	48.04	50.94	52.39	56.72	59.57
2400	21.37	24.97	26.70	28.56	30.29	32.13	33.85	35.67	37.40	39.20	40.92	42.70	44.42	46.18	47.91	49.65	51.38	53.11	54.84	56.55	59.97	61.70	66.76	70.16
2800	24.40	28.56	30.62	32.67	34.73	36.79	38.82	40.86	42.88	44.91	46.93	48.95	50.95	52.96	54.94	56.93	58.91	60.90	62.87	64.84	68.78	70.72	76.55	80.38
3200	27.35	32.04	34.29	36.70	38.94	41.34	43.58	45.94	48.17	50.51	52.74	55.06	57.29	59.57	61.80	64.05	66.28	68.51	70.74	72.96	77.37	79.58	86.10	90.46
3500	29.52	34.62	37.14	39.67	42.18	44.70	47.19	49.68	52.16	54.64	57.09	59.55	61.99	64.44	66.87	69.30	71.72	74.13	76.52	78.91	83.69	86.04	93.12	97.74
4000	33.06	38.80	41.55	44.50	47.25	50.17	52.91	55.79	58.51	61.36	64.08	66.90	69.62	72.40	75.10	77.84	80.55	83.27	85.95	88.64	93.98	96.65	104.51	109.73
4500	36.49	42.89	46.06	49.23	52.37	55.51	58.63	61.74	64.84	67.94	71.00	74.06	77.10	80.13	83.15	86.17	89.15	92.14	95.09	98.04	103.95	106.85	115.55	86.66
5000	39.85	46.88	50.23	53.83	57.17	60.73	64.06	67.57	70.87	74.32	77.63	81.04	84.32	87.68	90.95	94.26	97.52	100.78	104.00	107.22	113.61	116.80	126.19	94.21
5500	43.14	50.77	54.55	58.33	62.07	65.82	69.53	73.24	76.90	80.57	84.20	87.83	91.42	95.01	98.56	102.11	105.63	109.15	112.60	116.06	122.97	92.23		

8M-21	Rated Horsepower for Small Sprocket (Number of Teeth and Pitch Diameter, Inches)										Additional HP required per belt for speed ratio of speed down drive									
RPM Small Shaft	53	56	60	63	64	67	71	72	75	80	1.00 to 1.02	1.03 to 1.05	1.06 to 1.10	1.11 to 1.15	1.16 to 1.21	1.22 to 1.30	1.31 to 1.43	1.44 to 1.64	1.65 to 2.15	2.16 and over
	5.314	5.610	6.015	6.316	6.420	6.717	7.118	7.220	7.519	8.020										
10	0.74	0.79	0.85	0.89	0.91	0.96	1.02	1.03	1.08	1.16										
20	1.19	1.26	1.37	1.44	1.47	1.54	1.64	1.66	1.73	1.86										
40	2.03	2.15	2.33	2.46	2.50	2.63	2.79	2.84	2.97	3.19										
50	2.43	2.59	2.80	2.96	3.01	3.16	3.36	3.41	3.56	3.82										
60	2.83	3.01	3.26	3.44	3.50	3.68	3.91	3.97	4.15	4.45										
100	4.38	4.66	5.03	5.31	5.41	5.68	6.05	6.14	6.42	6.88										
200	8.02	8.54	9.24	9.77	9.94	10.46	11.15	11.32	11.83	12.69	0.00	0.01	0.02	0.04	0.05	0.06	0.07	0.09	0.1	0.11
300	11.52	12.27	13.28	14.04	14.30	15.04	16.04	16.29	17.03	18.25	0.00	0.01	0.03	0.04	0.06	0.07	0.08	0.1	0.11	0.13
400	14.92	15.91	17.22	18.20	18.53	19.50	20.80	21.12	22.08	23.68	0.00	0.02	0.03	0.05	0.07	0.08	0.1	0.11	0.13	0.15
500	18.25	19.44	21.06	22.26	22.68	23.86	25.44	25.85	27.02	28.98	0.00	0.02	0.05	0.07	0.1	0.12	0.15	0.17	0.19	0.22
600	21.51	22.94	24.85	26.28	26.76	28.16	30.03	30.50	31.89	34.21	0.00	0.03	0.06	0.08	0.11	0.14	0.17	0.19	0.22	0.25
700	24.75	26.37	28.57	30.20	30.77	32.36	34.52	35.07	36.67	39.34	0.00	0.03	0.06	0.1	0.13	0.16	0.19	0.23	0.26	0.29
800	27.91	29.77	32.25	34.12	34.74	36.56	38.99	39.60	41.41	44.42	0.00	0.04	0.08	0.13	0.17	0.21	0.25	0.29	0.33	0.38
870	30.15	32.13	34.81	36.80	37.49	39.43	42.07	42.74	44.68	47.93	0.00	0.05	0.1	0.15	0.19	0.24	0.29	0.34	0.39	0.44
1000	34.17	36.45	39.50	41.78	42.54	44.77	47.75	48.49	50.70	54.39	0.00	0.06	0.11	0.17	0.22	0.28	0.33	0.39	0.45	0.5
1160	39.10	41.69	45.18	47.77	48.67	51.20	54.61	55.48	58.00	62.23	0.00	0.07	0.14	0.21	0.28	0.35	0.42	0.49	0.56	0.63
1200	40.29	42.98	46.58	49.27	50.17	52.81	56.33	57.21	59.82	64.17	0.00	0.08	0.16	0.24	0.32	0.4	0.48	0.56	0.64	0.72
1400	46.35	49.42	53.55	56.62	57.68	60.68	64.74	65.77	68.75	73.75	0.00	0.08	0.17	0.25	0.33	0.42	0.5	0.58	0.67	0.75
1600	52.25	55.76	60.41	63.90	65.07	68.48	73.03	74.17	77.54	83.16	0.00	0.1	0.19	0.29	0.38	0.48	0.58	0.67	0.77	0.86
1750	56.68	60.43	65.49	69.24	70.54	74.19	79.12	80.38	84.02	90.11	0.00	0.1	0.19	0.29	0.39	0.49	0.58	0.68	0.78	0.88
2000	63.85	68.13	73.82	78.08	79.50	83.65	89.18	90.56	94.66	101.48	0.00	0.11	0.22	0.33	0.45	0.56	0.67	0.78	0.89	1
2400	75.20	80.17	86.84	91.79	93.50	98.31	104.79	106.44	111.19	119.14	0.00	0.12	0.24	0.36	0.48	0.61	0.73	0.85	0.97	1.09
2800	86.13	91.88	99.48	105.18	107.08	112.60	119.95	121.78	127.17	136.15	0.00	0.13	0.25	0.38	0.5	0.63	0.75	0.88	1	1.13
3200	96.92	103.29	111.78	118.08	120.26	126.32	134.51	136.59			0.00	0.14	0.28	0.42	0.56	0.7	0.84	0.97	1.11	1.25
3500	104.68	111.62	120.73	127.57	129.85						0.00	0.16	0.32	0.49	0.65	0.81	0.97	1.13	1.29	1.45
4000	117.49	125.13									0.00	0.24	0.49	0.73	0.97	1.22	1.46	1.71	1.95	2.19
4500											0.00	0.28	0.56	0.84	1.11	1.39	1.67	1.95	2.23	2.51
5000											0.00	0.42	0.83	1.25	1.67	2.09	2.51	2.92	3.34	3.76
5500											0.00	0.48	0.96	1.44	1.92	2.4	2.88	3.36	3.84	4.32
											0.00	0.56	1.11	1.67	2.23	2.79	3.34	3.9	4.46	5.01
											0.00	0.63	1.25	1.88	2.51	3.13	3.76	4.39	5.01	5.64
											0.00	0.7	1.39	2.09	2.78	3.48	4.18	4.87	5.57	6.27
											0.00	0.77	1.53	2.3	3.06	3.83	4.6	5.36	6.13	6.89

SELECTION

HT500 Basic HP Ratings - 8mm

8M-36	Rated Horsepower for Small Sprocket (Number of Teeth and Pitch Diameter, Inches)																							
RPM	22	24	25	26	27	28	29	30	31	32	33	34	35	36	37	38	39	40	41	42	44	45	48	50
Small Shaft	2.210	2.410	2.506	2.610	2.707	2.810	2.907	3.010	3.108	3.210	3.308	3.410	3.509	3.610	3.709	3.810	3.910	4.010	4.110	4.211	4.410	4.511	4.810	5.013
10	0.45	0.51	0.54	0.57	0.60	0.63	0.65	0.66	0.69	0.72	0.75	0.78	0.81	0.84	0.86	0.87	0.90	0.93	0.96	0.99	1.05	1.07	1.14	1.19
20	0.69	0.78	0.82	0.87	0.91	0.96	1.00	1.05	1.09	1.14	1.18	1.23	1.27	1.32	1.36	1.41	1.45	1.50	1.54	1.58	1.65	1.70	1.83	1.91
40	1.17	1.32	1.40	1.47	1.55	1.62	1.70	1.77	1.85	1.92	2.00	2.07	2.15	2.22	2.30	2.37	2.45	2.52	2.60	2.67	2.82	2.90	3.12	3.26
50	1.38	1.56	1.65	1.74	1.83	1.92	2.01	2.10	2.19	2.28	2.37	2.46	2.55	2.64	2.73	2.82	2.91	3.00	3.09	3.18	3.36	3.45	3.72	3.90
60	1.59	1.80	1.91	2.01	2.12	2.22	2.33	2.43	2.54	2.64	2.76	2.88	2.99	3.09	3.20	3.30	3.41	3.51	3.62	3.72	3.93	4.03	4.32	4.53
100	2.40	2.73	2.89	3.06	3.22	3.39	3.55	3.72	3.88	4.05	4.21	4.38	4.54	4.71	4.87	5.04	5.20	5.37	5.54	5.70	6.03	6.20	6.69	7.02
200	4.26	4.89	5.21	5.52	5.84	6.15	6.47	6.78	7.08	7.38	7.70	8.01	8.31	8.61	8.91	9.21	9.53	9.84	10.14	10.44	11.04	11.34	12.24	12.84
300	6.06	6.96	7.39	7.86	8.30	8.76	9.20	9.66	10.09	10.53	10.97	11.43	11.88	12.33	12.76	13.20	13.63	14.07	14.51	14.96	15.84	16.28	17.58	18.45
400	7.74	8.94	9.53	10.11	10.70	11.28	11.87	12.45	13.02	13.59	14.18	14.76	15.33	15.90	16.49	17.07	17.64	18.21	18.78	19.35	20.49	21.06	22.77	23.90
500	9.39	10.86	11.55	12.30	13.00	13.74	14.44	15.18	15.87	16.59	17.28	18.00	18.71	19.44	20.14	20.85	21.54	22.23	22.94	23.65	25.05	25.75	27.81	29.21
600	11.01	12.72	13.58	14.43	15.29	16.14	16.98	17.82	18.68	19.53	20.37	21.21	22.04	22.86	23.70	24.54	25.37	26.19	27.02	27.86	29.52	30.34	32.79	34.43
700	12.60	14.58	15.52	16.53	17.49	18.51	19.46	20.46	21.41	22.41	23.35	24.33	25.28	26.25	27.20	28.17	29.13	30.09	31.05	32.00	33.90	34.87	37.71	39.61
800	14.13	16.38	17.49	18.60	19.71	20.82	21.93	23.04	24.14	25.23	26.33	27.42	28.52	29.61	30.69	31.77	32.85	33.93	35.01	36.09	38.25	39.32	42.54	44.66
870	15.21	17.64	18.80	20.04	21.20	22.44	23.59	24.81	25.98	27.21	28.36	29.55	30.72	31.92	33.08	34.26	35.43	36.60	37.77	38.93	41.25	42.43	45.90	48.23
1000	17.16	19.92	21.29	22.65	24.02	25.38	26.75	28.11	29.46	30.81	32.15	33.48	34.83	36.18	37.52	38.85	40.17	41.49	42.82	44.15	46.80	48.11	52.05	54.66
1160	19.53	22.68	24.20	25.83	27.34	28.95	30.47	32.07	33.58	35.16	36.68	38.25	39.78	41.34	42.86	44.40	45.91	47.43	48.95	50.47	53.49	55.02	59.52	62.55
1200	20.10	23.37	24.99	26.61	28.23	29.85	31.46	33.06	34.65	36.24	37.83	39.42	41.01	42.60	44.18	45.75	47.33	48.90	50.47	52.04	55.17	56.72	61.38	64.46
1400	22.98	26.76	28.55	30.48	32.28	34.20	36.01	37.92	39.73	41.61	43.41	45.27	47.08	48.93	50.73	52.56	54.37	56.19	58.00	59.80	63.39	65.20	70.53	74.13
1600	25.80	30.06	32.18	34.29	36.41	38.52	40.61	42.69	44.78	46.86	48.93	51.00	53.07	55.14	57.20	59.25	61.29	63.33	65.37	67.41	71.49	73.51	79.56	83.57
1750	27.90	32.52	34.73	37.11	39.32	41.67	43.89	46.23	48.45	50.76	52.97	55.26	57.47	59.73	61.95	64.20	66.42	68.64	70.86	73.08	77.49	79.71	86.25	90.64
2000	31.32	36.54	39.14	41.73	44.31	46.89	49.47	52.05	54.60	57.15	59.70	62.25	64.79	67.32	69.84	72.36	74.87	77.37	79.86	82.35	87.33	89.81	97.23	102.12
2400	36.63	42.81	45.77	48.96	51.92	55.08	58.03	61.14	64.11	67.20	70.15	73.20	76.15	79.17	82.12	85.11	88.08	91.05	94.00	96.95	102.81	105.76	114.45	120.27
2800	41.82	48.96	52.49	56.01	59.54	63.06	66.56	70.05	73.52	76.98	80.45	83.91	87.35	90.78	94.19	97.59	101.00	104.40	107.78	111.15	117.90	121.23	131.22	137.79
3200	46.89	54.93	58.78	62.91	66.76	70.86	74.70	78.75	82.58	86.58	90.42	94.38	98.21	102.12	105.94	109.80	113.62	117.45	121.26	125.07	132.63	136.43	147.60	155.07
3500	50.61	59.34	63.68	68.01	72.32	76.62	80.90	85.17	89.42	93.66	97.88	102.09	106.28	110.46	114.63	118.80	122.94	127.08	131.18	135.27	143.46	147.50	159.63	167.56
4000	56.67	66.51	71.22	76.29	81.00	86.01	90.70	95.64	100.31	105.18	109.86	114.69	119.35	124.11	128.75	133.44	138.09	142.74	147.35	151.95	161.10	165.68	179.16	188.12
4500	62.55	73.53	78.96	84.39	89.78	95.16	100.50	105.84	111.15	116.46	121.71	126.96	132.17	137.37	142.55	147.72	152.84	157.95	163.01	168.08	178.20	183.17	198.09	148.57
5000	68.31	80.37	86.11	92.28	98.01	104.10	109.81	115.83	121.50	127.41	133.08	138.93	144.55	150.30	155.91	161.58	167.17	172.77	178.29	183.80	194.76	200.23	216.33	
5500	73.95	87.03	93.51	99.99	106.41	112.83	119.19	125.55	131.84	138.12	144.35	150.57	156.72	162.87	168.96	175.05	181.08	187.11	193.04	198.96	210.81	158.11		

8M-36	Rated Horsepower for Small Sprocket (Number of Teeth and Pitch Diameter, Inches)										Additional HP required per belt for speed ratio of speed down drive									
RPM	53	56	60	63	64	67	71	72	75	80	1.00 to	1.03 to	1.06 to	1.11 to	1.16 to	1.22 to	1.31 to	1.44 to	1.65 to	2.16
Small Shaft	5.314	5.610	6.015	6.316	6.420	6.717	7.118	7.220	7.519	8.020	1.02	1.05	1.10	1.15	1.21	1.30	1.43	1.64	2.15	and over
10	1.27	1.35	1.46	1.53	1.56	1.64	1.74	1.77	1.85	1.98										
20	2.04	2.16	2.34	2.47	2.52	2.64	2.81	2.85	2.97	3.18										
40	3.48	3.69	3.99	4.22	4.29	4.50	4.79	4.86	5.09	5.46										
50	4.17	4.44	4.80	5.07	5.16	5.42	5.76	5.85	6.11	6.54										
60	4.85	5.16	5.58	5.90	6.00	6.30	6.71	6.81	7.11	7.62										
100	7.50	7.98	8.63	9.10	9.27	9.74	10.37	10.53	11.00	11.79										
200	13.74	14.64	15.84	16.74	17.04	17.93	19.11	19.41	20.29	21.75	0.00	0.02	0.04	0.06	0.08	0.11	0.13	0.15	0.17	0.19
300	19.75	21.03	22.77	24.06	24.51	25.78	27.49	27.93	29.19	31.29	0.00	0.02	0.05	0.07	0.1	0.12	0.14	0.17	0.19	0.21
400	25.58	27.27	29.52	31.21	31.77	33.44	35.66	36.21	37.85	40.59	0.00	0.03	0.06	0.08	0.11	0.14	0.17	0.2	0.22	0.25
500	31.28	33.33	36.11	38.17	38.88	40.90	43.62	44.31	46.32	49.68	0.00	0.04	0.08	0.13	0.17	0.21	0.25	0.29	0.33	0.38
600	36.88	39.33	42.60	45.05	45.87	48.28	51.49	52.29	54.68	58.65	0.00	0.05	0.1	0.14	0.19	0.24	0.29	0.33	0.38	0.43
700	42.43	45.21	48.98	51.77	52.74	55.48	59.18	60.12	62.86	67.44	0.00	0.06	0.11	0.17	0.22	0.28	0.33	0.39	0.45	0.5
800	47.85	51.03	55.29	58.49	59.55	62.68	66.85	67.89	70.98	76.14	0.00	0.07	0.14	0.22	0.29	0.36	0.43	0.5	0.57	0.64
870	51.68	55.08	59.67	63.08	64.26	67.60	72.11	73.26	76.59	82.17	0.00	0.08	0.17	0.25	0.33	0.42	0.5	0.58	0.67	0.75
1000	58.58	62.49	67.71	71.63	72.93	76.76	81.86	83.13	86.92	93.24	0.00	0.1	0.19	0.29	0.38	0.48	0.57	0.67	0.76	0.86
1160	67.04	71.46	77.45	81.89	83.43	87.76	93.61	95.10	99.43	106.68	0.00	0.12	0.24	0.36	0.48	0.6	0.72	0.84	0.96	1.07
1200	69.07	73.68	79.85	84.47	86.01	90.53	96.56	98.07	102.55	110.01	0.00	0.14	0.27	0.41	0.55	0.69	0.82	0.96	1.1	1.24
1400	79.46	84.72	91.81	97.06	98.88	104.03	110.97	112.74	117.86	126.42	0.00	0.14	0.29	0.43	0.57	0.72	0.86	1	1.15	1.29
1600	89.57	95.58	103.56	109.55	111.54	117.39	125.19	127.14	132.92	142.56	0.00	0.17	0.33	0.49	0.66	0.82	0.99	1.15	1.32	1.48
1750	97.16	103.59	112.27	118.71	120.93	127.19	135.64	137.79	144.03	154.47	0.00	0.17	0.33	0.5	0.67	0.84	1	1.17	1.34	1.5
2000	109.46	116.79	126.54	133.85	136.29	143.40	152.88	155.25	162.27	173.97	0.00	0.19	0.38	0.57	0.76	0.95	1.15	1.34	1.53	1.72
2400	128.91	137.43	148.87	157.36	160.29	168.52	179.64	182.46	190.60	204.24	0.00	0.21	0.41	0.62	0.83	1.04	1.25	1.45	1.66	1.87
2800	147.65	157.50	170.54	180.31	183.57	193.02	205.62	208.77	218.01	233.40	0.00	0.22	0.43	0.65	0.86	1.07	1.29	1.5	1.72	1.93
3200	166.14	177.06	191.62	202.43	206.16	216.55	230.59	234.15			0.00	0.24	0.48	0.72	0.95	1.19	1.43	1.67	1.91	2.15
3500	179.45	191.34	206.97	218.69	222.60						0.00	0.28	0.55	0.83	1.11	1.38	1.66	1.94	2.22	2.49
4000	201.40	214.50									0.00	0.42	0.83	1.25	1.67	2.09	2.51	2.92	3.34	3.76
4500											0.00	0.48	0.95	1.43	1.91	2.39	2.86	3.34	3.82	4.3
5000											0.00	0.72	1.43	2.15	2.86	3.58	4.3	5.01	5.73	6.44
5500											0.00	0.83	1.65	2.47	3.29	4.12	4.94	5.76	6.59	7.41
											0.00	0.96	1.91	2.87	3.82	4.77	5.73	6.68	7.64	8.59
											0.00	1.08	2.15	3.23	4.3	5.37	6.45	7.52	8.6	9.67
											0.00	11.2	2.38	3.58	4.77	5.97	7.16	8.35	9.55	10.7
											0.00	1.32	2.62	3.94	5.25	6.56	7.88	9.19	10.5	11.8

Selection program available online at ptwizard.com

HT500 Basic HP Ratings - 8mm

8M-62	Rated Horsepower for Small Sprocket (Number of Teeth and Pitch Diameter, Inches)																							
RPM Small Shaft	22	24	25	26	27	28	29	30	31	32	33	34	35	36	37	38	39	40	41	42	44	45	48	50
	2.210	2.410	2.506	2.610	2.707	2.810	2.907	3.010	3.108	3.210	3.308	3.410	3.509	3.610	3.709	3.810	3.910	4.010	4.110	4.211	4.410	4.511	4.810	5.013
10	0.78	0.88	0.93	0.98	1.03	1.09	1.11	1.14	1.19	1.24	1.29	1.34	1.40	1.45	1.47	1.50	1.55	1.60	1.65	1.71	1.81	1.85	1.96	2.05
20	1.19	1.34	1.42	1.50	1.57	1.65	1.73	1.81	1.88	1.96	2.04	2.12	2.20	2.27	2.35	2.43	2.51	2.58	2.65	2.71	2.84	2.92	3.15	3.30
40	2.02	2.27	2.40	2.53	2.66	2.79	2.92	3.05	3.18	3.31	3.44	3.57	3.69	3.82	3.95	4.08	4.21	4.34	4.47	4.60	4.86	4.99	5.37	5.62
50	2.38	2.69	2.84	3.00	3.15	3.31	3.46	3.62	3.77	3.93	4.08	4.24	4.39	4.55	4.70	4.86	5.01	5.17	5.32	5.48	5.79	5.94	6.41	6.72
60	2.74	3.10	3.28	3.46	3.64	3.82	4.00	4.19	4.37	4.55	4.75	4.96	5.14	5.32	5.50	5.68	5.86	6.05	6.23	6.41	6.77	6.94	7.44	7.80
100	4.13	4.70	4.98	5.27	5.55	5.84	6.12	6.41	6.68	6.98	7.25	7.54	7.82	8.11	8.39	8.68	8.96	9.25	9.53	9.82	10.39	10.67	11.52	12.08
200	7.34	8.42	8.96	9.51	10.05	10.59	11.13	11.68	12.19	12.71	13.25	13.80	14.31	14.83	15.35	15.86	16.40	16.95	17.46	17.98	19.01	19.53	21.08	22.11
300	10.44	11.99	12.73	13.54	14.29	15.09	15.84	16.64	17.37	18.14	18.90	19.69	20.45	21.24	21.98	22.73	23.48	24.23	25.00	25.76	27.28	28.04	30.28	31.78
400	13.33	15.40	16.40	17.41	18.42	19.43	20.43	21.44	22.42	23.41	24.41	25.42	26.40	27.38	28.39	29.40	30.38	31.36	32.34	33.33	35.29	36.27	39.22	41.15
500	16.17	18.70	19.90	21.18	22.38	23.66	24.87	26.14	27.33	28.57	29.77	31.00	32.23	33.48	34.69	35.91	37.10	38.29	39.50	40.72	43.14	44.35	47.90	50.30
600	18.96	21.91	23.38	24.85	26.32	27.80	29.24	30.69	32.16	33.64	35.08	36.53	37.95	39.37	40.82	42.26	43.68	45.11	46.54	47.97	50.84	52.25	56.47	59.29
700	21.70	25.11	26.73	28.47	30.12	31.88	33.51	35.24	36.88	38.60	40.22	41.90	43.54	45.21	46.85	48.52	50.17	51.82	53.47	55.11	58.38	60.05	64.95	68.22
800	24.34	28.21	30.12	32.03	33.95	35.86	37.77	39.68	41.57	43.45	45.34	47.22	49.11	51.00	52.86	54.72	56.58	58.44	60.30	62.16	65.88	67.72	73.26	76.92
870	26.20	30.38	32.37	34.51	36.52	38.65	40.63	42.73	44.75	46.86	48.84	50.89	52.91	54.97	56.98	59.00	61.02	63.03	65.04	67.05	71.04	73.07	79.05	83.06
1000	29.55	34.31	36.66	39.01	41.36	43.71	46.06	48.41	50.74	53.06	55.36	57.66	59.99	62.31	64.61	66.91	69.18	71.46	73.74	76.03	80.60	82.86	89.64	94.14
1160	33.64	39.06	41.67	44.49	47.09	49.86	52.48	55.23	57.84	60.55	63.17	65.88	68.51	71.20	73.82	76.47	79.07	81.69	84.31	86.92	92.12	94.76	102.51	107.72
1200	34.62	40.25	43.04	45.83	48.62	51.41	54.17	56.94	59.68	62.41	65.15	67.89	70.63	73.37	76.08	78.79	81.50	84.22	86.92	89.62	95.02	97.69	105.71	111.01
1400	39.58	46.09	49.17	52.49	55.60	58.90	62.02	65.31	68.42	71.66	74.76	77.97	81.08	84.27	87.38	90.52	93.64	96.77	99.89	102.99	109.17	112.29	121.47	127.66
1600	44.43	51.77	55.41	59.06	62.70	66.34	69.93	73.52	77.11	80.70	84.27	87.83	91.40	94.96	98.50	102.04	105.56	109.07	112.58	116.10	123.12	126.60	137.02	143.92
1750	48.05	56.01	59.82	63.91	67.72	71.77	75.59	79.62	83.44	87.42	91.23	95.17	98.98	102.87	106.70	110.57	114.39	118.21	122.04	125.86	133.46	137.28	148.54	156.11
2000	53.94	62.93	67.40	71.87	76.31	80.76	85.20	89.64	94.03	98.43	102.82	107.21	111.57	115.94	120.28	124.62	128.93	133.25	137.54	141.83	150.40	154.66	167.45	175.87
2400	63.09	73.73	78.83	84.32	89.43	94.86	99.94	105.30	110.41	115.73	120.82	126.07	131.15	136.35	141.43	146.58	151.69	156.81	161.89	166.97	177.06	182.15	197.11	207.14
2800	72.02	84.32	90.39	96.46	102.53	108.60	114.62	120.64	126.61	132.58	138.54	144.51	150.43	156.34	162.21	168.07	173.94	179.80	185.61	191.43	203.05	208.79	225.99	237.31
3200	80.76	94.60	101.22	108.35	114.98	122.04	128.65	135.63	142.23	149.11	155.72	162.54	169.14	175.87	182.45	189.10	195.68	202.28	208.84	215.39	228.42	234.96	254.20	267.06
3500	87.16	102.20	109.66	117.13	124.54	131.96	139.32	146.68	153.99	161.30	168.56	175.82	183.03	190.24	197.42	204.60	211.73	218.86	225.91	232.97	247.07	254.03	274.92	288.57
4000	97.60	114.55	122.66	131.39	139.50	148.13	156.21	164.71	172.76	181.14	189.20	197.52	205.55	213.75	221.73	229.81	237.82	245.83	253.77	261.70	277.45	285.34	308.55	323.98
4500	107.73	126.64	135.99	145.34	154.61	163.89	173.08	182.28	191.43	200.57	209.61	218.65	227.62	236.58	245.49	254.41	263.22	272.03	280.74	289.46	306.90	315.46	341.16	255.87
5000	117.65	138.42	148.30	158.93	168.79	179.28	189.12	199.49	209.25	219.43	229.19	239.27	248.95	258.85	268.51	278.28	287.91	297.55	307.06	316.55	335.42	344.84	372.57	278.14
5500	127.36	149.89	161.05	172.21	183.26	194.32	205.27	216.23	227.05	237.87	248.59	259.32	269.91	280.50	290.99	301.48	311.86	322.25	332.45	342.65	363.06	272.30		

8M-62	Rated Horsepower for Small Sprocket (Number of Teeth and Pitch Diameter, Inches)										Additional HP required per belt for speed ratio of speed down drive									
RPM Small Shaft	53	56	60	63	64	67	71	72	75	80	1.00 to 1.02	1.03 to 1.05	1.06 to 1.10	1.11 to 1.15	1.16 to 1.21	1.22 to 1.30	1.31 to 1.43	1.44 to 1.64	1.65 to 2.15	2.16 and over
	5.314	5.610	6.015	6.316	6.420	6.717	7.118	7.220	7.519	8.020										
10	2.19	2.33	2.51	2.64	2.69	2.82	3.00	3.05	3.18	3.41										
20	3.51	3.72	4.03	4.26	4.34	4.55	4.84	4.91	5.12	5.48										
40	5.99	6.36	6.87	7.26	7.39	7.76	8.25	8.37	8.76	9.40										
50	7.19	7.65	8.27	8.73	8.89	9.33	9.92	10.08	10.52	11.26										
60	8.34	8.89	9.61	10.15	10.33	10.86	11.55	11.73	12.25	13.12										
100	12.92	13.74	14.86	15.68	15.97	16.77	17.86	18.14	18.95	20.31										
200	23.66	25.21	27.28	28.83	29.35	30.88	32.92	33.43	34.94	37.46	0.00	0.04	0.07	0.11	0.14	0.18	0.22	0.25	0.29	0.33
300	34.02	36.22	39.22	41.44	42.21	44.40	47.35	48.10	50.27	53.89	0.00	0.04	0.08	0.12	0.16	0.21	0.25	0.29	0.33	0.37
400	44.06	46.97	50.84	53.75	54.72	57.58	61.41	62.36	65.19	69.91	0.00	0.05	0.1	0.14	0.19	0.24	0.29	0.34	0.38	0.43
500	53.88	57.40	62.18	65.73	66.96	70.43	75.12	76.31	79.77	85.56	0.00	0.07	0.14	0.22	0.29	0.36	0.43	0.5	0.58	0.65
600	63.51	67.74	73.37	77.59	79.00	83.14	88.67	90.06	94.16	101.01	0.00	0.08	0.16	0.25	0.33	0.41	0.49	0.58	0.66	0.74
700	73.07	77.86	84.35	89.17	90.83	95.55	101.92	103.54	108.25	116.15	0.00	0.1	0.19	0.29	0.38	0.48	0.57	0.67	0.77	0.86
800	82.40	87.89	95.22	100.72	102.56	107.94	115.13	116.92	122.25	131.13	0.00	0.12	0.25	0.37	0.49	0.62	0.74	0.86	0.99	1.11
870	89.00	94.86	102.77	108.64	110.67	116.43	124.20	126.17	131.91	141.52	0.00	0.14	0.29	0.43	0.58	0.72	0.86	1.01	1.15	1.29
1000	100.88	107.62	116.61	123.35	125.60	132.19	140.97	143.17	149.70	160.58	0.00	0.16	0.33	0.49	0.66	0.82	0.99	1.15	1.32	1.48
1160	115.45	123.07	133.39	141.04	143.69	151.15	161.22	163.78	171.24	183.73	0.00	0.21	0.41	0.62	0.82	1.03	1.23	1.44	1.64	1.85
1200	118.95	126.89	137.51	145.47	148.13	155.92	166.30	168.90	176.61	189.46	0.00	0.24	0.47	0.71	0.95	1.18	1.42	1.65	1.89	2.13
1400	136.85	145.91	158.11	167.16	170.29	179.16	191.12	194.16	202.97	217.72	0.00	0.25	0.49	0.74	0.99	1.23	1.48	1.73	1.97	2.22
1600	154.26	164.61	178.35	188.66	192.10	202.17	215.61	218.96	228.92	245.52	0.00	0.28	0.57	0.85	1.13	1.42	1.7	1.99	2.27	2.55
1750	167.34	178.41	193.35	204.44	208.27	219.05	233.61	237.31	248.05	266.03	0.00	0.29	0.57	0.86	1.15	1.44	1.73	2.01	2.3	2.59
2000	188.51	201.14	217.93	230.52	234.72	246.97	263.29	267.38	279.47	299.62	0.00	0.33	0.66	0.99	1.32	1.64	1.97	2.3	2.63	2.96
2400	222.02	236.69	256.38	271.00	276.06	290.23	309.37	314.24	328.26	351.75	0.00	0.36	0.71	1.07	1.43	1.79	2.15	2.5	2.86	3.22
2800	254.28	271.25	293.70	310.54	316.15	332.42	354.12	359.55	375.46	401.97	0.00	0.37	0.74	1.11	1.48	1.85	2.22	2.59	2.96	3.33
3200	286.13	304.94	330.01	348.62	355.05	372.95	397.12	403.26			0.00	0.41	0.82	1.23	1.64	2.06	2.47	2.88	3.29	3.7
3500	309.05	329.53	356.45	376.64	383.37						0.00	0.48	0.95	1.43	1.91	2.38	2.86	3.34	3.82	4.29
4000	346.86	369.42	184.57								0.00	0.72	1.44	2.16	2.88	3.6	4.32	5.04	5.76	6.47
4500											0.00	0.82	1.64	2.47	3.29	4.11	4.93	5.75	6.58	7.4
5000											0.00	1.24	2.46	3.7	4.93	6.17	7.4	8.63	9.87	11.1
5500											0.00	1.42	2.83	4.26	5.67	7.09	8.51	9.93	11.3	12.8
											0.00	1.65	3.29	4.94	6.58	8.22	9.87	11.5	13.2	14.8
											0.00	1.85	3.7	5.56	7.4	9.25	11.1	12.9	14.8	16.6
											0.00	2.06	4.11	6.17	8.22	10.3	12.3	14.4	16.4	18.5
											0.00	2.27	4.52	6.79	9.04	11.3	13.6	15.8	18.1	20.3

SELECTION

HT500 Basic HP Ratings - 14mm

14M-20	Rated Horsepower for Small Sprocket (Number of Teeth and Pitch Diameter, Inches)																		
RPM Small Shaft	28 4.912	29 5.088	30 5.263	31 5.439	32 5.614	33 5.790	34 5.965	35 6.141	36 6.316	37 6.492	38 6.667	39 6.842	40 7.018	41 7.193	42 7.369	44 7.720	45 7.895	48 8.421	50 8.772
10	1.17	1.22	1.27	1.32	1.36	1.41	1.45	1.50	1.54	1.59	1.63	1.68	1.72	1.77	1.82	1.91	1.96	2.09	2.18
20	1.84	1.92	1.99	2.07	2.14	2.21	2.28	2.36	2.43	2.51	2.58	2.65	2.72	2.79	2.86	3.01	3.08	3.30	3.45
40	3.06	3.18	3.31	3.44	3.56	3.69	3.81	3.94	4.06	4.19	4.31	4.43	4.55	4.67	4.80	5.04	5.16	5.53	5.78
60	4.20	4.37	4.55	4.72	4.89	5.07	5.24	5.42	5.59	5.76	5.93	6.10	6.27	6.44	6.61	6.95	7.12	7.63	7.97
100	6.35	6.62	6.88	7.15	7.42	7.69	7.95	8.22	8.48	8.75	9.01	9.27	9.53	9.79	10.05	10.57	10.83	11.61	12.13
200	11.33	11.82	12.31	12.80	13.28	13.76	14.24	14.72	15.20	15.68	16.16	16.63	17.11	17.58	18.05	19.00	19.47	20.88	21.81
300	15.99	16.69	17.39	18.08	18.77	19.46	20.15	20.84	21.52	22.20	22.88	23.56	24.23	24.91	25.58	26.93	27.60	29.59	30.92
400	20.46	21.36	22.25	23.14	24.03	24.92	25.80	26.68	27.56	28.44	29.32	30.19	31.06	31.93	32.79	34.53	35.39	37.96	39.66
500	24.76	25.86	26.95	28.04	29.12	30.20	31.27	32.35	33.42	34.49	35.55	36.61	37.67	38.73	39.78	41.89	42.93	46.06	48.13
600	28.95	30.24	31.52	32.80	34.07	35.34	36.60	37.86	39.12	40.37	41.62	42.86	44.11	45.34	46.58	49.05	50.27	53.94	56.37
700	33.04	34.52	35.98	37.44	38.90	40.35	41.80	43.25	44.69	46.12	47.55	48.98	50.40	51.82	53.23	56.06	57.46	61.65	64.43
800	37.05	38.71	40.35	42.00	43.64	45.27	46.90	48.52	50.14	51.75	53.36	54.96	56.57	58.16	59.74	62.92	64.49	69.20	72.32
870	39.81	41.59	43.37	45.14	46.90	48.66	50.41	52.16	53.90	55.64	57.37	59.10	60.82	62.53	64.24	67.65	69.34	74.41	77.76
1000	44.84	46.86	48.86	50.86	52.85	54.84	56.82	58.79	60.76	62.72	64.68	66.62	68.57	70.50	72.42	76.28	78.18	83.90	87.67
1160	50.89	53.19	55.47	57.75	60.02	62.28	64.53	66.78	69.02	71.25	73.47	75.68	77.89	80.08	82.28	86.66	88.82	95.30	99.58
1200	52.38	54.75	57.10	59.44	61.78	64.11	66.43	68.74	71.05	73.34	75.63	77.91	80.19	82.44	84.70	89.21	91.43	98.11	102.52
1400	59.70	62.42	65.10	67.78	70.46	73.12	75.77	78.41	81.05	83.67	86.28	88.88	91.48	94.05	96.62	101.76	104.29	111.89	116.90
1600	66.84	69.89	72.91	75.92	78.91	81.89	84.87	87.83	90.78	93.72	96.65	99.55	102.46	105.33	108.21	113.97	116.79	125.28	130.87
1750	72.09	75.38	78.63	81.88	85.12	88.34	91.55	94.74	97.93	101.09	104.25	107.39	110.52	113.62	116.72	122.91	125.95	135.08	141.08
2000	80.63	84.32	87.96	91.60	95.23	98.83	102.43	105.99	109.55	113.08	116.61	120.11	123.61	127.06	130.51	137.41	140.79	150.94	157.60
2400	93.82	98.12	102.37	106.60	110.82	115.00	119.18	123.32	127.45	131.54	135.63	139.68	143.72	147.70	151.67	159.62	163.50	175.15	182.75
2800	106.48	111.36	116.18	120.97	125.75	130.48	135.20	139.87	144.53	149.14	153.74	158.28	162.83	167.27	171.72	180.63	184.95	197.93	
3000	112.61	117.77	122.86	127.92	132.97	137.96	142.94	147.86	152.77	157.62	162.46	167.24	172.01	176.68	181.35	190.68			
3500	127.41	133.22	138.96	144.65	150.32	155.91	161.49	166.98	172.47	177.87	183.26	188.56	193.86						
4000	141.44	147.86	154.18	160.43	166.68	172.80	178.92	184.91	190.90										

14M-20	Rated Horsepower for Small Sprocket (Number of Teeth and Pitch Diameter, Inches)											Additional HP required per belt for speed ratio of speed down drive									
RPM Small Shaft	52 9.123	53 9.299	56 9.825	60 10.527	63 11.053	64 11.229	67 11.755	71 12.457	72 12.632	75 13.158	80 14.036	1.00 to 1.03	1.04 to 1.10	1.11 to 1.19	1.20 to 1.30	1.31 to 1.45	1.46 to 1.67	1.68 to 2.02	2.03 to 2.69	2.70 to 4.64	4.65 and over
10	2.27	2.31	2.44	2.62	2.76	2.80	2.94	3.12	3.16	3.29	3.51										
20	3.59	3.66	3.88	4.16	4.38	4.45	4.66	4.94	5.01	5.22	5.57										
40	6.02	6.14	6.50	6.98	7.34	7.46	7.82	8.29	8.41	8.77	9.36										
60	8.30	8.47	8.97	9.63	10.13	10.30	10.79	11.45	11.61	12.10	12.92										
100	12.64	12.90	13.66	14.68	15.44	15.69	16.44	17.44	17.69	18.44	19.68										
200	22.74	23.20	24.59	26.42	27.79	28.25	29.61	31.43	31.88	33.22	35.46										
300	32.24	32.90	34.87	37.48	39.43	40.08	42.01	44.58	45.22	47.13	50.31	0.00	0.04	0.09	0.13	0.18	0.22	0.27	0.31	0.36	0.4
400	41.36	42.21	44.74	48.08	50.59	51.43	53.90	57.21	58.03	60.47	64.55	0.00	0.05	0.1	0.15	0.2	0.25	0.3	0.36	0.41	0.46
500	50.19	51.22	54.30	58.36	61.41	62.42	65.42	69.42	70.42	73.39	78.33	0.00	0.06	0.12	0.18	0.24	0.3	0.36	0.42	0.47	0.53
600	58.80	60.00	63.61	68.36	71.93	73.12	76.63	81.31	82.48	85.94	91.72	0.00	0.09	0.18	0.27	0.36	0.44	0.53	0.62	0.71	0.8
700	67.20	68.58	72.70	78.13	82.20	83.56	87.57	92.91	94.25	98.20	104.78	0.00	0.1	0.2	0.3	0.41	0.51	0.61	0.71	0.81	0.91
800	75.43	76.97	81.60	87.69	92.25	93.78	98.27	104.25	105.75	110.17	117.54	0.00	0.12	0.24	0.35	0.47	0.59	0.71	0.83	0.95	1.06
870	81.10	82.76	87.73	94.27	99.18	100.81	105.63	112.05	113.66	118.40	126.30	0.00	0.15	0.3	0.46	0.61	0.76	0.91	1.07	1.22	1.37
1000	91.44	93.31	98.91	106.26	111.78	113.62	119.03	126.25	128.05	133.36	142.21	0.00	0.18	0.36	0.53	0.71	0.89	1.07	1.24	1.42	1.6
1160	103.86	105.98	112.32	120.65	126.89	128.97	135.08	143.22	145.25	151.23	161.20	0.00	0.2	0.41	0.61	0.81	1.02	1.22	1.42	1.62	1.83
1200	106.92	109.10	115.62	124.18	130.60	132.74	139.01	147.38	149.47	155.61	165.85	0.00	0.25	0.51	0.76	1.02	1.27	1.52	1.78	2.03	2.28
1400	121.91	124.38	131.79	141.49	148.76	151.18	158.26	167.70	170.06	176.97	188.48	0.00	0.29	0.58	0.88	1.17	1.46	1.75	2.04	2.33	2.63
1600	136.45	139.20	147.45	158.21	166.28	168.98	176.80	187.24	189.85	197.44	210.10	0.00	0.3	0.61	0.91	1.22	1.52	1.83	2.13	2.44	2.74
1750	147.07	150.02	158.87	170.39	179.02	181.90	190.25	201.38	204.16	212.22	225.66	0.00	0.35	0.7	1.05	1.4	1.75	2.1	2.45	2.8	3.15
2000	164.24	167.51	177.29	189.97	199.47	202.65						0.00	0.36	0.71	1.07	1.42	1.78	2.13	2.49	2.84	3.2
2400	190.34	194.05	205.17									0.00	0.41	0.81	1.22	1.62	2.03	2.44	2.84	3.25	3.65
2800												0.00	0.44	0.88	1.32	1.77	2.21	2.65	3.09	3.53	3.97
3000												0.00	0.46	0.91	1.37	1.83	2.28	2.74	3.2	3.65	4.11
3500												0.00	0.51	1.01	1.52	2.03	2.54	3.04	3.55	4.06	4.57
4000												0.00	0.59	1.18	1.77	2.35	2.94	3.53	4.12	4.71	5.3
												0.00	0.89	1.78	2.66	3.55	4.44	5.33	6.22	7.1	7.99
												0.00	1.02	2.03	3.04	4.06	5.08	6.09	7.1	8.12	9.13
												0.00	1.52	3.04	4.57	6.09	7.61	9.13	10.7	12.2	13.7
												0.00	1.75	3.5	5.25	7	8.75	10.5	12.3	14	15.8
												0.00	2.03	4.06	6.09	8.12	10.2	12.2	14.2	16.2	18.3

DODGE®

HT500 Basic HP Ratings - 14mm

14M-37	Rated Horsepower for Small Sprocket (Number of Teeth and Pitch Diameter, Inches)																		
RPM Small Shaft	28	29	30	31	32	33	34	35	36	37	38	39	40	41	42	44	45	48	50
	4.912	5.088	5.263	5.439	5.614	5.790	5.965	6.141	6.316	6.492	6.667	6.842	7.018	7.193	7.369	7.720	7.895	8.421	8.772
10	2.16	2.26	2.35	2.43	2.52	2.60	2.68	2.77	2.85	2.93	3.02	3.10	3.18	3.27	3.36	3.53	3.62	3.87	4.03
20	3.40	3.55	3.68	3.82	3.96	4.09	4.22	4.36	4.50	4.63	4.77	4.90	5.03	5.17	5.30	5.57	5.70	6.11	6.37
40	5.66	5.88	6.12	6.35	6.59	6.82	7.05	7.28	7.51	7.74	7.97	8.20	8.42	8.64	8.87	9.32	9.55	10.23	10.68
60	7.77	8.08	8.42	8.73	9.05	9.37	9.69	10.02	10.34	10.66	10.97	11.28	11.60	11.91	12.23	12.86	13.17	14.12	14.74
100	11.75	12.25	12.73	13.23	13.73	14.22	14.71	15.20	15.69	16.18	16.67	17.15	17.63	18.11	18.59	19.55	20.04	21.48	22.43
200	20.96	21.87	22.77	23.67	24.57	25.46	26.34	27.23	28.12	29.01	29.90	30.77	31.65	32.53	33.40	35.15	36.02	38.63	40.35
300	29.58	30.88	32.17	33.45	34.72	36.00	37.28	38.54	39.81	41.07	42.33	43.58	44.83	46.07	47.32	49.82	51.05	54.74	57.19
400	37.85	39.52	41.16	42.81	44.46	46.09	47.73	49.36	50.99	52.61	54.24	55.85	57.46	59.06	60.67	63.88	65.47	70.23	73.37
500	45.81	47.84	49.86	51.86	53.87	55.86	57.85	59.84	61.83	63.80	65.77	67.73	69.69	71.64	73.59	77.50	79.43	85.21	89.03
600	53.56	55.94	58.31	60.68	63.03	65.37	67.71	70.04	72.37	74.68	77.00	79.30	81.60	83.89	86.17	90.74	93.00	99.79	104.29
700	61.12	63.86	66.56	69.26	71.97	74.65	77.33	80.00	82.68	85.32	87.97	90.60	93.24	95.86	98.48	103.71	106.30	114.05	119.19
800	68.54	71.61	74.65	77.70	80.73	83.75	86.77	89.76	92.76	95.74	98.72	101.68	104.65	107.59	110.52	116.40	119.30	128.02	133.79
870	73.65	76.94	80.23	83.50	86.77	90.01	93.26	96.49	99.72	102.92	106.13	109.33	112.52	115.68	118.83	125.15	128.28	137.66	143.85
1000	82.95	86.69	90.39	94.09	97.77	101.45	105.12	108.76	112.41	116.03	119.66	123.25	126.85	130.42	133.98	141.12	144.64	155.22	162.20
1160	94.15	98.40	102.62	106.83	111.04	115.21	119.38	123.53	127.69	131.80	135.92	140.01	144.10	148.15	152.21	160.32	164.32	176.31	184.22
1200	96.90	101.29	105.64	109.97	114.29	118.60	122.90	127.17	131.44	135.68	139.92	144.13	148.35	152.52	156.69	165.04	169.15	181.50	189.66
1400	110.45	115.48	120.44	125.39	130.35	135.26	140.17	145.06	149.94	154.78	159.62	164.43	169.24	173.99	178.75	188.26	192.94	207.00	216.27
1600	123.65	129.30	134.88	140.44	145.98	151.50	157.01	162.48	167.94	173.37	178.80	184.17	189.55	194.87	200.19	210.84	216.07	231.77	242.11
1750	133.37	139.45	145.47	151.47	157.47	163.42	169.37	175.27	181.17	187.02	192.86	198.66	204.46	210.19	215.92	227.38	233.01	249.90	260.99
2000	149.17	155.99	162.73	169.46	176.18	182.84	189.50	196.09	202.67	209.20	215.73	222.20	228.68	235.05	241.43	254.21	260.46	279.24	291.55
2400	173.57	181.52	189.38	197.20	205.02	212.75	220.48	228.13	235.78	243.35	250.92	258.40	265.88	273.24	280.59	295.30	302.48	324.03	338.08
2800	196.99	206.02	214.93	223.80	232.64	241.39	250.12	258.76	267.38	275.90	284.42	292.82	301.24	309.46	317.69	334.17	342.16	366.17	
3000	208.33	217.87	227.29	236.64	245.99	255.22	264.44	273.53	282.62	291.59	300.55	309.38	318.22	326.85	335.49	352.76			
3500	235.71	246.46	257.08	267.60	278.09	288.44	298.76	308.92	319.07	329.05	339.03	348.83	358.64						
4000	261.66	273.54	285.23	296.80	308.36	319.68	331.00	342.08	353.17										

14M-37	Rated Horsepower for Small Sprocket (Number of Teeth and Pitch Diameter, Inches)											Additional HP required per belt for speed ratio of speed down drive									
RPM Small Shaft	52	53	56	60	63	64	67	71	72	75	80	1.00 to 1.03	1.04 to 1.10	1.11 to 1.19	1.20 to 1.30	1.31 to 1.45	1.46 to 1.67	1.68 to 2.02	2.03 to 2.69	2.70 to 4.64	4.65 and over
	9.123	9.299	9.825	10.527	11.053	11.229	11.755	12.457	12.632	13.158	14.036										
10	4.20	4.28	4.51	4.85	5.10	5.18	5.43	5.76	5.85	6.09	6.49										
20	6.64	6.78	7.18	7.71	8.10	8.23	8.62	9.14	9.27	9.66	10.30										
40	11.14	11.36	12.03	12.91	13.58	13.80	14.46	15.34	15.56	16.22	17.32										
60	15.36	15.67	16.59	17.82	18.75	19.06	19.96	21.18	21.48	22.39	23.90										
100	23.38	23.86	25.27	27.15	28.56	29.03	30.41	32.26	32.73	34.11	36.41										
200	42.07	42.93	45.49	48.88	51.41	52.26	54.78	58.14	58.98	61.46	65.60										
300	59.64	60.86	64.51	69.33	72.94	74.15	77.71	82.47	83.66	87.19	93.07	0.00	0.08	0.17	0.25	0.33	0.41	0.5	0.58	0.66	0.74
400	76.52	78.08	82.77	88.96	93.60	95.15	99.72	105.83	107.36	111.88	119.42	0.00	0.09	0.19	0.28	0.38	0.47	0.56	0.66	0.75	0.84
500	92.85	94.75	100.46	107.97	113.60	115.48	121.03	128.43	130.28	135.76	144.91	0.00	0.11	0.22	0.33	0.44	0.55	0.66	0.77	0.88	0.99
600	108.78	111.01	117.68	126.47	133.07	135.27	141.76	150.42	152.59	159.00	169.68	0.00	0.16	0.33	0.49	0.66	0.82	0.99	1.15	1.31	1.48
700	124.32	126.86	134.50	144.54	152.07	154.59	162.00	171.89	174.36	181.67	193.84	0.00	0.19	0.38	0.56	0.75	0.94	1.13	1.31	1.5	1.69
800	139.55	142.40	150.96	162.22	170.67	173.49	181.79	192.87	195.64	203.82	217.45	0.00	0.22	0.44	0.66	0.88	1.09	1.31	1.53	1.75	1.97
870	150.04	153.10	162.30	174.40	183.47	186.50	195.41	207.30	210.27	219.04	233.66	0.00	0.28	0.56	0.84	1.13	1.41	1.69	1.97	2.25	2.53
1000	169.16	172.62	182.98	196.59	206.79	210.20	220.20	233.56	236.89	246.72	263.09	0.00	0.33	0.66	0.99	1.31	1.64	1.97	2.3	2.63	2.96
1160	192.14	196.05	207.79	223.19	234.74	238.59	249.89	264.95	268.71	279.78	298.22	0.00	0.38	0.75	1.13	1.5	1.88	2.25	2.63	3	3.38
1200	197.80	201.83	213.90	229.73	241.60	245.57	257.17	272.65	276.52	287.88	306.82	0.00	0.47	0.94	1.41	1.88	2.35	2.82	3.29	3.75	4.22
1400	225.53	230.10	243.81	261.75	275.20	279.68	292.78	310.25	314.61	327.39	348.69	0.00	0.54	1.08	1.62	2.16	2.7	3.24	3.78	4.32	4.86
1600	252.43	257.52	272.78	292.69	307.62	312.61	327.09	346.40	351.22	365.27	388.69	0.00	0.56	1.13	1.69	2.25	2.82	3.38	3.94	4.51	5.07
1750	272.08	277.54	293.91	315.21	331.19	336.52	351.96	372.55	377.70	392.61	417.47	0.00	0.65	1.3	1.94	2.59	3.24	3.89	4.53	5.18	5.83
2000	303.84	309.89	327.99	351.44	369.03	374.90						0.00	0.66	1.31	1.97	2.63	3.29	3.94	4.6	5.26	5.91
2400	352.13	358.99	379.56									0.00	0.75	1.5	2.25	3	3.76	4.51	5.26	6.01	6.76
2800												0.00	0.82	1.63	2.45	3.27	4.08	4.9	5.72	6.53	7.35
3200												0.00	0.85	1.69	2.53	3.38	4.23	5.07	5.91	6.76	7.6
3600												0.00	0.94	1.88	2.82	3.76	4.69	5.63	6.57	7.51	8.45
4000												0.00	1.09	2.18	3.27	4.36	5.45	6.53	7.62	8.71	9.8
												0.00	1.64	3.29	4.93	6.57	8.22	9.85	11.5	13.1	14.8
												0.00	1.88	3.76	5.63	7.51	9.39	11.3	13.1	15	16.9
												0.00	2.82	5.63	8.45	11.3	14.1	16.9	19.7	22.5	25.3
												0.00	3.24	6.48	9.71	13	16.2	19.4	22.7	25.9	29.1
												0.00	3.76	7.51	11.3	15	18.8	22.5	26.3	30	33.8

SELECTION

HT500 Basic HP Ratings - 14mm

14M-68	Rated Horsepower for Small Sprocket (Number of Teeth and Pitch Diameter, Inches)																		
RPM Small Shaft	28	29	30	31	32	33	34	35	36	37	38	39	40	41	42	44	45	48	50
	4.912	5.088	5.263	5.439	5.614	5.790	5.965	6.141	6.316	6.492	6.667	6.842	7.018	7.193	7.369	7.720	7.895	8.421	8.772
10	3.98	4.15	4.32	4.47	4.62	4.78	4.93	5.08	5.24	5.39	5.54	5.70	5.85	6.01	6.17	6.49	6.65	7.11	7.41
20	6.26	6.53	6.77	7.02	7.28	7.51	7.75	8.01	8.26	8.52	8.77	9.01	9.25	9.49	9.74	10.23	10.48	11.22	11.71
40	10.40	10.81	11.25	11.68	12.10	12.53	12.95	13.38	13.80	14.23	14.65	15.06	15.47	15.89	16.30	17.14	17.55	18.80	19.64
60	14.28	14.86	15.47	16.05	16.63	17.22	17.82	18.41	19.01	19.58	20.16	20.74	21.32	21.90	22.47	23.63	24.21	25.94	27.08
100	21.59	22.51	23.39	24.31	25.23	26.13	27.03	27.93	28.83	29.73	30.63	31.52	32.40	33.29	34.17	35.94	36.82	39.47	41.23
200	38.52	40.19	41.85	43.51	45.15	46.79	48.42	50.05	51.68	53.31	54.94	56.56	58.17	59.78	61.38	64.60	66.20	70.99	74.16
300	54.37	56.75	59.13	61.47	63.82	66.16	68.51	70.84	73.17	75.48	77.79	80.09	82.38	84.68	86.97	91.56	93.82	100.61	105.11
400	69.56	72.62	75.65	78.68	81.70	84.71	87.72	90.71	93.70	96.70	99.69	102.64	105.60	108.55	111.50	117.40	120.31	129.06	134.85
500	84.18	87.92	91.63	95.32	99.01	102.66	106.32	109.97	113.63	117.25	120.87	124.47	128.08	131.67	135.25	142.43	145.97	156.60	163.63
600	98.43	102.82	107.17	111.51	115.84	120.14	124.44	128.73	133.01	137.26	141.51	145.74	149.97	154.17	158.37	166.77	170.92	183.40	191.67
700	112.34	117.37	122.33	127.30	132.26	137.19	142.12	147.03	151.95	156.81	161.67	166.52	171.36	176.17	180.98	190.60	195.36	209.61	219.05
800	125.97	131.61	137.19	142.79	148.38	153.93	159.46	164.97	170.48	175.95	181.42	186.88	192.34	197.73	203.13	213.93	219.26	235.28	245.88
870	135.35	141.41	147.46	153.46	159.46	165.43	171.39	177.33	183.26	189.16	195.06	200.92	206.79	212.59	218.40	230.01	235.76	252.99	264.37
1000	152.46	159.32	166.12	172.92	179.69	186.45	193.19	199.89	206.58	213.25	219.91	226.52	233.14	239.68	246.24	259.35	265.82	285.26	298.09
1160	173.03	180.85	188.60	196.33	204.07	211.74	219.40	227.04	234.67	242.23	249.80	257.31	264.83	272.28	279.74	294.64	301.99	324.02	338.57
1200	178.09	186.15	194.14	202.11	210.05	217.97	225.86	233.72	241.57	249.36	257.14	264.89	272.65	280.30	287.97	303.31	310.87	333.57	348.56
1400	202.98	212.23	221.34	230.45	239.56	248.59	257.62	266.59	275.57	284.46	293.35	302.19	311.03	319.77	328.51	345.98	354.59	380.43	397.46
1600	227.26	237.63	247.89	258.11	268.29	278.44	288.56	298.61	308.65	318.63	328.61	338.48	348.36	358.14	367.92	387.50	397.10	425.95	444.96
1750	245.11	256.29	267.34	278.38	289.41	300.34	311.27	322.12	332.96	343.71	354.45	365.11	375.77	386.30	396.83	417.89	428.24	459.27	479.66
2000	274.14	286.69	299.06	311.45	323.78	336.04	348.26	360.37	372.47	384.47	396.47	408.37	420.27	431.99	443.72	467.19	478.68	513.20	535.83
2400	318.99	333.61	348.06	362.42	376.79	391.00	405.21	419.27	433.33	447.24	461.14	474.90	488.65	502.16	515.68	542.71	555.91	595.51	621.33
2800	362.03	378.62	395.01	411.31	427.55	443.64	459.68	475.55	491.40	507.06	522.72	538.16	553.62	568.73	583.86	614.14	628.83	672.96	
3000	382.87	400.42	417.72	434.91	452.10	469.05	486.00	502.71	519.42	535.89	552.36	568.60	584.83	600.70	616.57	648.31			
3500	433.19	452.95	472.46	491.81	511.09	530.10	549.07	567.75	586.40	604.74	623.08	641.09	659.12	494.53	329.80				
4000	480.90	502.72	524.21	545.46	566.71	587.52	608.33	628.69	649.06	324.53									

14M-68	Rated Horsepower for Small Sprocket (Number of Teeth and Pitch Diameter, Inches)											Additional HP required per belt for speed ratio of speed down drive									
RPM Small Shaft	52	53	56	60	63	64	67	71	72	75	80	1.00 to 1.03	1.04 to 1.10	1.11 to 1.19	1.20 to 1.30	1.31 to 1.45	1.46 to 1.67	1.68 to 2.02	2.03 to 2.69	2.70 to 4.64	4.65 and over
	9.123	9.299	9.825	10.527	11.053	11.229	11.755	12.457	12.632	13.158	14.036										
10	7.72	7.86	8.30	8.91	9.37	9.52	9.98	10.59	10.74	11.19	11.93										
20	12.21	12.45	13.19	14.16	14.89	15.13	15.84	16.80	17.03	17.75	18.94										
40	20.47	20.88	22.10	23.73	24.96	25.36	26.58	28.19	28.59	29.81	31.82										
60	28.22	28.79	30.50	32.76	34.45	35.02	36.69	38.92	39.47	41.14	43.93										
100	42.98	43.84	46.44	49.90	52.48	53.35	55.90	59.30	60.15	62.68	66.91										
200	77.32	78.89	83.61	89.83	94.49	96.05	100.68	106.85	108.39	112.96	120.56										
300	109.62	111.85	118.56	127.42	134.06	136.27	142.83	151.56	153.75	160.24	171.05	0.00	0.15	0.3	0.46	0.61	0.76	0.91	1.06	1.21	1.37
400	140.62	143.50	152.12	163.49	172.01	174.86	183.27	194.50	197.30	205.61	219.47	0.00	0.17	0.35	0.52	0.69	0.86	1.03	1.21	1.38	1.55
500	170.65	174.14	184.62	198.42	208.78	212.23	222.43	236.03	239.43	249.51	266.32	0.00	0.2	0.4	0.61	0.81	1.01	1.21	1.41	1.61	1.82
600	199.92	204.01	216.27	232.44	244.56	248.61	260.54	276.46	280.43	292.21	311.85	0.00	0.3	0.6	0.91	1.21	1.51	1.81	2.11	2.42	2.72
700	228.48	233.16	247.18	265.64	279.49	284.10	297.73	315.91	320.45	333.88	356.25	0.00	0.35	0.69	1.03	1.38	1.73	2.07	2.42	2.76	3.11
800	256.46	261.71	277.44	298.14	313.66	318.85	334.11	354.46	359.55	374.58	399.64	0.00	0.4	0.8	1.21	1.61	2.01	2.41	2.81	3.22	3.62
870	275.74	281.38	298.28	320.52	337.20	342.75	359.14	380.98	386.44	402.56	429.42	0.00	0.52	1.04	1.55	2.07	2.59	3.1	3.62	4.14	4.66
1000	310.90	317.25	336.29	361.29	380.04	386.31	404.70	429.24	435.37	453.42	483.51	0.00	0.6	1.21	1.81	2.42	3.02	3.62	4.23	4.83	5.43
1160	353.12	360.32	381.89	410.19	431.42	438.50	459.26	486.93	493.85	514.19	548.08	0.00	0.69	1.38	2.07	2.76	3.45	4.14	4.83	5.52	6.21
1200	363.53	370.93	393.11	422.20	444.02	451.32	472.64	501.09	508.20	529.08	563.89	0.00	0.86	1.73	2.59	3.45	4.31	5.17	6.04	6.9	7.76
1400	414.49	422.89	448.09	481.05	505.77	514.01	538.08	570.18	578.20	601.69	640.83	0.00	0.99	1.98	2.98	3.97	4.96	5.95	6.94	7.94	8.93
1600	463.93	473.29	501.33	537.92	565.36	574.53	601.13	636.62	645.49	671.31	714.34	0.00	1.04	2.07	3.1	4.14	5.18	6.21	7.25	8.28	9.32
1750	500.04	510.07	540.16	579.31	608.67	618.46	646.84	684.68	694.14	721.56	767.24	0.00	1.19	2.38	3.57	4.76	5.95	7.14	8.33	9.52	10.7
2000	558.42	569.52	602.79	645.88	678.21	689.01						0.00	1.21	2.42	3.62	4.83	6.04	7.24	8.45	9.66	10.9
2400	647.16	659.76	697.58									0.00	1.38	2.76	4.14	5.52	6.9	8.28	9.66	11	12.4
2800												0.00	1.5	3	4.5	6	7.51	9	10.5	12	13.5
3000												0.00	1.55	3.11	4.66	6.21	7.76	9.31	10.9	12.4	14
3500												0.00	1.73	3.45	5.17	6.9	8.63	10.3	12.1	13.8	15.5
4000												0.00	2	4	6	8.01	10	12	14	16	18
												0.00	3.02	6.04	9.05	12.1	15.1	18.1	21.1	24.2	27.2
												0.00	3.45	6.9	10.3	13.8	17.3	20.7	24.2	27.6	31.1
												0.00	5.18	10.4	15.5	20.7	25.9	31	36.2	41.4	46.6
												0.00	5.96	11.9	17.9	23.8	29.8	35.7	41.7	47.6	53.6
												0.00	6.91	13.8	20.7	27.6	34.5	41.4	48.3	55.2	62.1

DODGE®

HT500 Basic HP Ratings - 14mm

14M-90	Rated Horsepower for Small Sprocket (Number of Teeth and Pitch Diameter, Inches)																		
RPM Small Shaft	28 4.912	29 5.088	30 5.263	31 5.439	32 5.614	33 5.790	34 5.965	35 6.141	36 6.316	37 6.492	38 6.667	39 6.842	40 7.018	41 7.193	42 7.369	44 7.720	45 7.895	48 8.421	50 8.772
10	5.27	5.49	5.72	5.92	6.12	6.32	6.53	6.73	6.93	7.13	7.34	7.54	7.74	7.95	8.17	8.60	8.80	9.41	9.81
20	8.28	8.64	8.96	9.29	9.63	9.95	10.26	10.60	10.94	11.27	11.61	11.92	12.24	12.57	12.89	13.55	13.87	14.85	15.50
40	13.77	14.31	14.90	15.46	16.02	16.58	17.15	17.71	18.27	18.83	19.40	19.94	20.48	21.03	21.58	22.68	23.23	24.89	25.99
60	18.90	19.67	20.48	21.24	22.01	22.79	23.58	24.37	25.16	25.92	26.69	27.45	28.22	28.98	29.74	31.28	32.04	34.34	35.84
100	28.58	29.79	30.96	32.18	33.39	34.58	35.78	36.97	38.16	39.35	40.55	41.72	42.89	44.06	45.23	47.57	48.74	52.25	54.56
200	50.99	53.19	55.40	57.58	59.76	61.92	64.08	66.24	68.40	70.56	72.72	74.86	77.00	79.12	81.24	85.50	87.61	93.96	98.15
300	71.96	75.11	78.26	81.36	84.47	87.57	90.68	93.76	96.84	99.90	102.96	106.00	109.04	112.07	115.11	121.19	124.18	133.16	139.12
400	92.07	96.12	100.13	104.14	108.14	112.12	116.10	120.06	124.02	127.98	131.94	135.85	139.77	143.67	147.57	155.39	159.24	170.82	178.48
500	111.42	116.37	121.28	126.16	131.04	135.88	140.72	145.55	150.39	155.18	159.98	164.75	169.52	174.26	179.01	188.51	193.20	207.27	216.56
600	130.28	136.08	141.84	147.59	153.32	159.01	164.70	170.37	176.04	181.67	187.29	192.89	198.50	204.05	209.60	220.73	226.22	242.73	253.67
700	148.68	155.34	161.91	168.48	175.05	181.58	188.10	194.60	201.11	207.54	213.98	220.39	226.80	233.17	239.54	252.27	258.56	277.43	289.91
800	166.73	174.20	181.58	188.99	196.38	203.72	211.05	218.35	225.63	232.88	240.12	247.34	254.57	261.70	268.84	283.14	290.20	311.40	325.43
870	179.15	187.16	195.17	203.11	211.05	218.95	226.85	234.70	242.55	250.36	258.17	265.93	273.69	281.37	289.06	304.43	312.03	334.85	349.90
1000	201.78	210.87	219.87	228.86	237.83	246.77	255.69	264.56	273.42	282.24	291.06	299.81	308.57	317.23	325.90	343.26	351.82	377.55	394.53
1160	229.01	239.36	249.62	259.85	270.09	280.24	290.39	300.49	310.59	320.60	330.62	340.56	350.51	360.37	370.24	389.97	399.69	428.85	448.11
1200	235.71	246.38	256.95	267.50	278.01	288.49	298.94	309.34	319.73	330.03	340.34	350.59	360.86	370.99	381.14	401.45	411.45	441.50	461.34
1400	268.65	280.89	292.95	305.01	317.07	329.02	340.97	352.85	364.73	376.49	388.26	399.96	411.66	423.23	434.79	457.92	469.32	503.51	526.05
1600	300.78	314.51	328.10	341.62	355.10	368.52	381.92	395.22	408.51	421.72	434.93	447.99	461.07	474.00	486.95	512.87	525.58	563.76	588.92
1750	324.41	339.21	353.84	368.44	383.04	397.51	411.98	426.33	440.69	454.91	469.13	483.23	497.34	511.28	525.22	553.10	566.79	607.86	634.84
2000	362.84	379.44	395.82	412.21	428.54	444.76	460.94	476.97	492.98	508.86	524.75	540.49	556.25	571.75	587.27	618.35	633.55	679.23	709.18
2400	422.19	441.54	460.67	479.68	498.69	517.50	536.31	554.92	573.53	591.93	610.34	628.54	646.74	664.63	682.52	718.29	735.76	788.18	822.35
2800	479.16	501.12	522.81	544.38	565.88	587.17	608.40	629.41	650.39	671.11	691.83	712.27	732.74	752.74	772.76	812.84	832.28	890.69	
3000	506.75	529.97	552.87	575.62	598.37	620.80	643.23	665.35	687.47	709.27	731.07	752.56	774.05	795.05	816.05	858.06			
3500	573.35	599.49	625.32	650.93	676.44	701.61	726.71	751.43	776.12	800.39	824.67	848.51	872.37						
4000	636.48	665.37	693.81	721.94	750.06	777.60	805.14	832.10	859.05										

14M-90	Rated Horsepower for Small Sprocket (Number of Teeth and Pitch Diameter, Inches)											Additional HP required per belt for speed ratio of speed down drive									
RPM Small Shaft	52 9.123	53 9.299	56 9.825	60 10.527	63 11.053	64 11.229	67 11.755	71 12.457	72 12.632	75 13.158	80 14.036	1.00 to 1.03	1.04 to 1.10	1.11 to 1.19	1.20 to 1.30	1.31 to 1.45	1.46 to 1.67	1.68 to 2.02	2.03 to 2.69	2.70 to 4.64	4.65 and over
10	10.22	10.41	10.98	11.79	12.40	12.60	13.21	14.02	14.22	14.81	15.80										
20	16.16	16.48	17.46	18.74	19.70	20.03	20.97	22.23	22.55	23.49	25.07										
40	27.09	27.63	29.25	31.41	33.03	33.57	35.17	37.31	37.85	39.45	42.12										
60	37.35	38.10	40.37	43.36	45.60	46.35	48.56	51.51	52.25	54.46	58.14										
100	56.88	58.03	61.47	66.04	69.46	70.61	73.98	78.48	79.61	82.96	88.56										
200	102.33	104.41	110.66	118.89	125.06	127.13	133.25	141.42	143.46	149.50	159.57										
300	145.08	148.04	156.92	168.64	177.43	180.36	189.03	200.60	203.49	212.08	226.40	0.00	0.2	0.4	0.6	0.8	1	1.21	1.41	1.61	1.81
400	186.12	189.93	201.33	216.38	227.66	231.44	242.57	257.42	261.14	272.14	290.48	0.00	0.23	0.46	0.68	0.91	1.14	1.37	1.6	1.83	2.05
500	225.86	230.48	244.35	262.62	276.32	280.89	294.39	312.39	316.89	330.24	352.49	0.00	0.27	0.53	0.8	1.07	1.34	1.6	1.87	2.14	2.4
600	264.60	270.02	286.25	307.64	323.68	329.04	344.83	365.90	371.16	386.75	412.74	0.00	0.4	0.8	1.2	1.6	2	2.4	2.8	3.2	3.6
700	302.40	308.59	327.15	351.59	369.91	376.02	394.06	418.11	424.13	441.89	471.51	0.00	0.46	0.91	1.37	1.83	2.28	2.74	3.2	3.65	4.11
800	339.44	346.38	367.20	394.60	415.14	422.01	442.20	469.14	475.88	495.77	528.93	0.00	0.53	1.06	1.6	2.13	2.66	3.19	3.72	4.26	4.79
870	364.95	372.41	394.79	424.22	446.29	453.65	475.33	504.24	511.47	532.80	568.35	0.00	0.69	1.37	2.05	2.74	3.43	4.11	4.79	5.48	6.16
1000	411.48	419.89	445.10	478.18	503.00	511.29	535.63	568.11	576.23	600.12	639.95	0.00	0.8	1.6	2.4	3.2	4	4.79	5.59	6.39	7.19
1160	467.37	476.89	505.44	542.90	571.00	580.37	607.84	644.47	653.63	680.54	725.40	0.00	0.91	1.83	2.74	3.65	4.57	5.48	6.39	7.31	8.22
1200	481.14	490.94	520.29	558.80	587.68	597.33	625.55	663.21	672.62	700.26	746.33	0.00	1.14	2.28	3.42	4.57	5.71	6.85	7.99	9.13	10.3
1400	548.60	559.71	593.06	636.68	669.40	680.31	712.17	754.65	765.27	796.35	848.16	0.00	1.31	2.63	3.94	5.25	6.57	7.88	9.19	10.5	11.8
1600	614.03	626.41	663.53	711.95	748.27	760.41	795.61	842.59	854.33	888.50	945.45	0.00	1.37	2.74	4.11	5.48	6.85	8.22	9.59	11	12.3
1750	661.82	675.09	714.92	766.73	805.60	818.55	856.11	906.20	918.72	955.00	1015.47	0.00	1.58	3.15	4.73	6.3	7.88	9.45	11	12.6	14.2
2000	739.08	753.77	797.81	854.85	897.63	911.93						0.00	1.6	3.2	4.79	6.39	7.99	9.59	11.2	12.8	14.4
2400	856.53	873.21	923.27									0.00	1.83	3.65	5.48	7.31	9.14	11	12.8	14.6	16.4
2800												0.00	1.99	3.97	5.96	7.95	9.93	11.9	13.9	15.9	17.9
3000												0.00	2.06	4.11	6.16	8.22	10.3	12.3	14.4	16.4	18.5
3500												0.00	2.29	4.57	6.85	9.13	11.4	13.7	16	18.3	20.5
4000												0.00	2.65	5.3	7.94	10.6	13.2	15.9	18.5	21.2	23.8
												0.00	4	7.99	12	16	20	24	28	32	36
												0.00	4.57	9.13	13.7	18.3	22.8	27.4	32	36.5	41.1
												0.00	6.86	13.7	20.5	27.4	34.3	41.1	47.9	54.8	61.6
												0.00	7.88	15.8	23.6	31.5	39.4	47.3	55.1	63	70.9
												0.00	9.14	18.3	27.4	36.5	45.7	54.8	63.9	73.1	82.2

SELECTION

HT500 Basic HP Ratings - 14mm

14M-125	Rated Horsepower for Small Sprocket (Number of Teeth and Pitch Diameter, Inches)																		
RPM Small Shaft	28 4.912	29 5.088	30 5.263	31 5.439	32 5.614	33 5.790	34 5.965	35 6.141	36 6.316	37 6.492	38 6.667	39 6.842	40 7.018	41 7.193	42 7.369	44 7.720	45 7.895	48 8.421	50 8.772
10	7.31	7.63	7.94	8.22	8.50	8.78	9.06	9.34	9.63	9.91	10.19	10.47	10.75	11.05	11.34	11.94	12.22	13.06	13.63
20	11.50	12.00	12.44	12.91	13.38	13.81	14.25	14.72	15.19	15.66	16.13	16.56	17.00	17.45	17.91	18.81	19.27	20.63	21.53
40	19.13	19.88	20.69	21.47	22.25	23.03	23.81	24.59	25.38	26.16	26.94	27.69	28.44	29.20	29.97	31.50	32.27	34.56	36.09
60	26.25	27.31	28.44	29.50	30.56	31.66	32.75	33.84	34.94	36.00	37.06	38.12	39.19	40.25	41.31	43.44	44.50	47.69	49.78
100	39.69	41.38	43.00	44.69	46.38	48.03	49.69	51.34	53.00	54.66	56.31	57.94	59.56	61.19	62.81	66.06	67.69	72.56	75.78
200	70.81	73.88	76.94	79.97	83.00	86.00	89.00	92.00	95.00	98.00	101.00	103.97	106.94	109.89	112.84	118.75	121.68	130.50	136.32
300	99.94	104.31	108.69	113.00	117.31	121.63	125.94	130.22	134.50	138.75	143.00	147.22	151.44	155.66	159.88	168.31	172.47	184.94	193.22
400	127.88	133.50	139.06	144.64	150.19	155.73	161.25	166.75	172.25	177.75	183.25	188.68	194.13	199.54	204.96	215.81	221.17	237.25	247.88
500	154.75	161.63	168.44	175.22	182.00	188.72	195.44	202.16	208.88	215.53	222.19	228.81	235.44	242.03	248.63	261.81	268.33	287.88	300.78
600	180.94	189.00	197.00	204.98	212.94	220.85	228.75	236.63	244.50	252.31	260.13	267.90	275.69	283.40	291.11	306.56	314.20	337.13	352.33
700	206.50	215.75	224.88	234.00	243.13	252.19	261.25	270.28	279.31	288.25	297.19	306.09	315.00	323.84	332.69	350.38	359.11	385.31	402.66
800	231.56	241.94	252.19	262.49	272.75	282.95	293.13	303.26	313.38	323.44	333.50	343.53	353.56	363.47	373.39	393.25	403.05	432.50	451.99
870	248.81	259.94	271.06	282.09	293.13	304.09	315.06	325.97	336.88	347.72	358.56	369.34	380.13	390.80	401.47	422.81	433.38	465.06	485.97
1000	280.25	292.88	305.38	317.87	330.31	342.74	355.13	367.45	379.75	392.00	404.25	416.40	428.56	440.60	452.64	476.75	488.65	524.38	547.96
1160	318.06	332.44	346.69	360.91	375.13	389.22	403.31	417.34	431.38	445.28	459.19	473.00	486.81	500.52	514.22	541.63	555.13	595.63	622.38
1200	327.38	342.19	356.88	371.53	386.13	400.68	415.19	429.64	444.06	458.38	472.69	486.93	501.19	515.27	529.35	557.56	571.46	613.19	640.74
1400	373.13	390.13	406.88	423.63	440.38	456.97	473.56	490.06	506.56	522.91	539.25	555.50	571.75	587.81	603.88	636.00	651.83	699.31	730.63
1600	417.75	436.81	455.69	474.47	493.19	511.84	530.44	548.92	567.38	585.72	604.06	622.21	640.38	658.34	676.32	712.31	729.97	783.00	817.94
1750	450.56	471.13	491.44	511.72	532.00	552.09	572.19	592.13	612.06	631.81	651.56	671.16	690.75	710.11	729.47	768.19	787.20	844.25	881.72
2000	503.94	527.00	549.75	572.51	595.19	617.72	640.19	662.45	684.69	706.75	728.81	750.68	772.56	794.10	815.66	858.81	879.93	943.38	984.98
2400	586.38	613.25	639.81	666.22	692.63	718.75	744.88	770.72	796.56	822.13	847.69	872.97	898.25	923.09	947.94	997.63	1021.89	1094.69	1142.16
2800	665.50	696.00	726.13	756.09	785.94	815.51	845.00	874.18	903.31	932.10	960.88	989.27	1017.69	1045.47	1073.27	1128.94	1155.94	1237.06	
3000	703.81	736.06	767.88	799.47	831.06	862.22	893.38	924.09	954.81	985.09	1015.38	1045.22	1075.06	1104.23	1133.41	1191.75			
3500	796.31	832.63	868.50	904.07	939.50	974.45	1009.31	1043.65	1077.94	1111.66	1145.38	1178.48	1211.63						
4000	884.00	924.13	963.63	1002.69	1041.75	1080.00	1118.25	1155.69	1193.13	596.56									

14M-125	Rated Horsepower for Small Sprocket (Number of Teeth and Pitch Diameter, Inches)											Additional HP required per belt for speed ratio of speed down drive									
RPM Small Shaft	52 9.123	53 9.299	56 9.825	60 10.527	63 11.053	64 11.229	67 11.755	71 12.457	72 12.632	75 13.158	80 14.036	1.00 to 1.03	1.04 to 1.10	1.11 to 1.19	1.20 to 1.30	1.31 to 1.45	1.46 to 1.67	1.68 to 2.02	2.03 to 2.69	2.70 to 4.64	4.65 and over
10	14.19	14.45	15.25	16.38	17.22	17.50	18.34	19.47	19.75	20.57	21.94										
20	22.44	22.89	24.25	26.03	27.37	27.81	29.12	30.88	31.31	32.62	34.81										
40	37.63	38.38	40.63	43.63	45.88	46.63	48.85	51.82	52.56	54.79	58.50										
60	51.88	52.92	56.06	60.22	63.33	64.38	67.44	71.54	72.56	75.63	80.75										
100	79.00	80.59	85.38	91.72	96.48	98.06	102.75	109.00	110.56	115.23	123.00										
200	142.13	145.02	153.69	165.12	173.70	176.56	185.07	196.42	199.25	207.64	221.63										
300	201.50	205.61	217.94	234.22	246.43	250.50	262.55	278.61	282.63	294.55	314.44	0.00	0.28	0.56	0.84	1.12	1.4	1.67	1.95	2.23	2.51
400	258.50	263.79	279.63	300.52	316.20	321.44	336.90	357.53	362.69	377.97	403.44	0.00	0.32	0.63	0.95	1.27	1.59	1.9	2.22	2.54	2.85
500	313.69	320.11	339.38	364.75	383.78	390.13	408.88	433.88	440.13	458.66	489.56	0.00	0.37	0.74	1.11	1.48	1.86	2.23	2.6	2.97	3.34
600	367.50	375.02	397.56	427.27	449.55	457.00	478.93	508.19	515.50	537.16	573.25	0.00	0.56	1.11	1.66	2.22	2.78	3.33	3.88	4.44	4.99
700	420.00	428.59	454.38	488.31	513.77	522.25	547.30	580.71	589.06	613.74	654.88	0.00	0.63	1.27	1.9	2.54	3.17	3.81	4.44	5.07	5.71
800	471.44	481.09	510.00	548.05	576.59	586.13	614.17	651.59	660.94	688.57	734.63	0.00	0.74	1.48	2.22	2.96	3.7	4.43	5.17	5.91	6.65
870	506.88	517.23	548.31	589.19	619.84	630.06	660.18	700.34	710.38	740.00	789.38	0.00	0.95	1.9	2.85	3.81	4.76	5.71	6.66	7.61	8.56
1000	571.50	583.18	618.19	664.14	698.61	710.13	743.93	789.04	800.31	833.50	888.81	0.00	1.11	2.22	3.33	4.44	5.55	6.66	7.77	8.88	9.99
1160	649.13	662.34	702.00	754.03	793.05	806.06	844.22	895.09	907.81	945.20	1007.50	0.00	1.27	2.54	3.8	5.08	6.34	7.61	8.88	10.1	11.4
1200	668.25	681.86	722.63	776.11	816.22	829.63	868.82	921.12	934.19	972.58	1036.56	0.00	1.59	3.17	4.76	6.34	7.93	9.51	11.1	12.7	14.3
1400	761.94	777.38	823.69	884.28	929.73	944.88	989.13	1048.13	1062.88	1106.05	1178.00	0.00	1.82	3.65	5.47	7.3	9.12	10.9	12.8	14.6	16.4
1600	852.81	870.02	921.56	988.82	1039.27	1056.13	1105.02	1170.26	1186.56	1234.02	1313.13	0.00	1.9	3.81	5.71	7.61	9.52	11.4	13.3	15.2	17.1
1750	919.19	937.63	992.94	1064.91	1118.88	1136.88	1189.05	1258.61	1276.00	1326.39	1410.38	0.00	2.19	4.38	6.56	8.75	10.9	13.1	15.3	17.5	19.7
2000	1026.50	1046.91	1108.06	1187.29	1246.71	1266.56						0.00	2.22	4.44	6.66	8.88	11.1	13.3	15.5	17.8	20
2400	1189.63	1212.80	1282.31									0.00	2.54	5.07	7.61	10.2	12.7	15.2	17.8	20.3	22.8
2800												0.00	2.76	5.52	8.28	11	13.8	16.6	19.3	22.1	24.8
3000												0.00	2.86	5.71	8.56	11.4	14.3	17.1	20	22.8	25.7
3500												0.00	3.17	6.34	9.51	12.7	15.9	19	22.2	25.4	28.5
4000												0.00	3.68	7.36	11	14.7	18.4	22.1	25.8	29.4	33.1
												0.00	5.55	11.1	16.6	22.2	27.8	33.3	38.8	44.4	49.9
												0.00	6.35	12.7	19	25.4	31.7	38.1	44.4	50.7	57.1
												0.00	9.52	19	28.5	38.1	47.6	57.1	66.6	76.1	85.6
												0.00	10.9	21.9	32.8	43.8	54.7	65.6	76.6	87.5	98.5
												0.00	12.7	25.4	38	50.8	63.4	76.1	88.8	101.5	114.2

8M HT500 Selection Table

Speed Ratio	Sprocket Combinations: Driver No. of Teeth	Driver Pitch Dia. Inches	Driven No. of Teeth	Driven Pitch Dia. Inches	Center Distance, Inches: 640-8MX	720-8MX	800-8MX	896-8MX	960-8MX	1000-8MX	1040-8MX	1120-8MX	1200-8MX	1224-8MX	1280-8MX	1440-8MX	1600-8MX	1760-8MX
Length Factor*					0.79	0.83	0.87	0.91	0.94	0.96	0.97	1.00	1.03	1.03	1.05	1.10	1.14	1.17
1.000	22	2.206	22	2.206	9.13	10.71	12.28	14.17	15.43	16.22	17.00	18.58	20.15	20.63	21.73	24.88	28.03	31.18
1.000	25	2.506	25	2.506	8.66	10.24	11.81	13.70	14.96	15.75	16.53	18.11	19.68	20.16	21.26	24.41	27.56	30.71
1.000	26	2.607	26	2.607	8.50	10.08	11.65	13.54	14.80	15.59	16.37	17.95	19.52	20.00	21.10	24.25	27.40	30.55
1.000	27	2.707	27	2.707	8.35	9.92	11.50	13.39	14.65	15.43	16.22	17.79	19.37	19.84	20.94	24.09	27.24	30.39
1.000	28	2.807	28	2.807	8.19	9.77	11.34	13.23	14.49	15.28	16.06	17.64	19.21	19.69	20.79	23.94	27.09	30.24
1.000	29	2.907	29	2.907	8.03	9.61	11.18	13.07	14.33	15.12	15.90	17.48	19.05	19.53	20.63	23.78	26.93	30.08
1.000	30	3.008	30	3.008	7.88	9.45	11.03	12.92	14.18	14.96	15.75	17.32	18.90	19.37	20.47	23.62	26.77	29.92
1.000	31	3.108	31	3.108	7.72	9.29	10.87	12.76	14.02	14.80	15.59	17.16	18.74	19.21	20.31	23.46	26.61	29.76
1.000	32	3.208	32	3.208	7.56	9.14	10.71	12.60	13.86	14.65	15.43	17.01	18.58	19.06	20.16	23.31	26.46	29.61
1.000	33	3.308	33	3.308	7.40	8.98	10.55	12.44	13.70	14.49	15.27	16.85	18.42	18.90	20.00	23.15	26.30	29.45
1.000	34	3.409	34	3.409	7.25	8.82	10.40	12.29	13.55	14.33	15.12	16.69	18.27	18.74	19.84	22.99	26.14	29.29
1.000	35	3.509	35	3.509	7.09	8.66	10.24	12.13	13.39	14.17	14.96	16.53	18.11	18.58	19.68	22.83	25.98	29.13
1.000	36	3.609	36	3.609	6.93	8.51	10.08	11.97	13.23	14.02	14.80	16.38	17.95	18.43	19.53	22.68	25.83	28.98
1.000	37	3.709	37	3.709	6.77	8.35	9.92	11.81	13.07	13.86	14.64	16.22	17.79	18.27	19.37	22.52	25.67	28.82
1.000	38	3.810	38	3.810	6.62	8.19	9.77	11.66	12.92	13.70	14.49	16.06	17.64	18.11	19.21	22.36	25.51	28.66
1.000	39	3.910	39	3.910	6.46	8.03	9.61	11.50	12.76	13.54	14.33	15.90	17.48	17.95	19.05	22.20	25.35	28.50
1.000	40	4.010	40	4.010	6.30	7.88	9.45	11.34	12.60	13.39	14.17	15.75	17.32	17.80	18.90	22.05	25.20	28.35
1.000	41	4.110	41	4.110	6.14	7.72	9.29	11.18	12.44	13.23	14.01	15.59	17.16	17.64	18.74	21.89	25.04	28.19
1.000	42	4.211	42	4.211	5.99	7.56	9.14	11.03	12.29	13.07	13.86	15.43	17.01	17.48	18.58	21.73	24.88	28.03
1.000	45	4.511	45	4.511	5.51	7.09	8.66	10.55	11.81	12.60	13.38	14.96	16.53	17.01	18.11	21.26	24.41	27.56
1.000	48	4.812	48	4.812		6.62	8.19	10.08	11.34	12.13	12.91	14.49	16.06	16.54	17.64	20.79	23.94	27.09
1.000	50	5.013	50	5.013		6.30	7.88	9.77	11.03	11.81	12.60	14.17	15.75	16.22	17.32	20.47	23.62	26.77
1.000	53	5.314	53	5.314		5.83	7.40	9.29	10.55	11.34	12.12	13.70	15.27	15.75	16.85	20.00	23.15	26.30
1.000	56	5.614	56	5.614			6.93	8.82	10.08	10.87	11.65	13.23	14.80	15.28	16.38	19.53	22.68	25.83
1.000	60	6.015	60	6.015				8.19	9.45	10.24	11.02	12.60	14.17	14.65	15.75	18.90	22.05	25.20
1.000	63	6.316	63	6.316				7.72	8.98	9.76	10.55	12.12	13.70	14.17	15.27	18.42	21.57	24.72
1.000	67	6.717	67	6.717					8.35	9.13	9.92	11.49	13.07	13.54	14.64	17.79	20.94	24.09
1.000	71	7.118	71	7.118					7.72	8.50	9.29	10.86	12.44	12.91	14.01	17.16	20.31	23.46
1.000	75	7.519	75	7.519							8.66	10.23	11.81	12.28	13.38	16.53	19.68	22.83
1.000	80	8.020	80	8.020								9.45	11.02	11.50	12.60	15.75	18.90	22.05
1.024	41	4.110	42	4.211	6.06	7.64	9.21	11.10	12.36	13.15	13.93	15.51	17.08	17.56	18.66	21.81	24.96	28.11
1.025	40	4.010	41	4.110	6.22	7.80	9.37	11.26	12.52	13.31	14.09	15.67	17.24	17.72	18.82	21.97	25.12	28.27
1.026	38	3.810	39	3.910	6.54	8.11	9.69	11.58	12.84	13.62	14.41	15.98	17.56	18.03	19.13	22.28	25.43	28.58
1.026	39	3.910	40	4.010	6.38	7.95	9.53	11.42	12.68	13.46	14.25	15.82	17.40	17.87	18.97	22.12	25.27	28.42
1.027	37	3.709	38	3.810	6.69	8.27	9.84	11.73	12.99	13.78	14.56	16.14	17.71	18.19	19.29	22.44	25.59	28.74
1.028	36	3.609	37	3.709	6.85	8.43	10.00	11.89	13.15	13.94	14.72	16.30	17.87	18.35	19.45	22.60	25.75	28.90
1.029	34	3.409	35	3.509	7.17	8.74	10.32	12.21	13.47	14.25	15.04	16.61	18.19	18.66	19.76	22.91	26.06	29.21
1.029	35	3.509	36	3.609	7.01	8.58	10.16	12.05	13.31	14.09	14.88	16.45	18.03	18.50	19.60	22.75	25.90	29.05
1.030	33	3.308	34	3.409	7.32	8.90	10.47	12.36	13.62	14.41	15.19	16.77	18.34	18.82	19.92	23.07	26.22	29.37
1.031	32	3.208	33	3.308	7.48	9.06	10.63	12.52	13.78	14.57	15.35	16.93	18.50	18.98	20.08	23.23	26.38	29.53
1.032	31	3.108	32	3.208	7.64	9.21	10.79	12.68	13.94	14.72	15.51	17.08	18.66	19.13	20.23	23.38	26.53	29.68
1.033	30	3.008	31	3.108	7.80	9.37	10.95	12.84	14.10	14.88	15.67	17.24	18.82	19.29	20.39	23.54	26.69	29.84
1.034	29	2.907	30	3.008	7.95	9.53	11.10	12.99	14.25	15.04	15.82	17.40	18.97	19.45	20.55	23.70	26.85	30.00
1.036	28	2.807	29	2.907	8.11	9.69	11.26	13.15	14.41	15.20	15.98	17.56	19.13	19.61	20.71	23.86	27.01	30.16
1.037	27	2.707	28	2.807	8.27	9.84	11.42	13.31	14.57	15.35	16.14	17.71	19.29	19.76	20.86	24.01	27.16	30.31
1.038	26	2.607	27	2.707	8.43	10.00	11.58	13.47	14.73	15.51	16.30	17.87	19.45	19.92	21.02	24.17	27.32	30.47
1.040	25	2.506	26	2.607	8.58	10.16	11.73	13.62	14.88	15.67	16.45	18.03	19.60	20.08	21.18	24.33	27.48	30.63
1.042	48	4.812	50	5.013		6.46	8.03	9.92	11.18	11.97	12.75	14.33	15.90	16.38	17.48	20.63	23.78	26.93
1.050	40	4.010	42	4.211	6.14	7.72	9.29	11.18	12.44	13.23	14.01	15.59	17.16	17.64	18.74	21.89	25.04	28.19
1.050	60	6.015	63	6.316				7.95	9.21	10.00	10.78	12.36	13.93	14.41	15.51	18.66	21.81	24.96
1.051	39	3.910	41	4.110	6.30	7.88	9.45	11.34	12.60	13.39	14.17	15.75	17.32	17.80	18.90	22.05	25.20	28.35
1.053	38	3.810	40	4.010	6.46	8.03	9.61	11.50	12.76	13.54	14.33	15.90	17.48	17.95	19.05	22.20	25.35	28.50
1.054	37	3.709	39	3.910	6.62	8.19	9.77	11.66	12.92	13.70	14.49	16.06	17.64	18.11	19.21	22.36	25.51	28.66
1.056	36	3.609	38	3.810	6.77	8.35	9.92	11.81	13.07	13.86	14.64	16.22	17.79	18.27	19.37	22.52	25.67	28.82
1.056	71	7.118	75	7.519						8.19	8.97	10.55	12.12	12.60	13.70	16.85	20.00	23.15
1.057	35	3.509	37	3.709	6.93	8.51	10.08	11.97	13.23	14.02	14.80	16.38	17.95	18.43	19.53	22.68	25.83	28.98
1.057	53	5.314	56	5.614			7.17	9.06	10.32	11.10	11.89	13.46	15.04	15.51	16.61	19.76	22.91	26.06
1.059	34	3.409	36	3.609	7.09	8.66	10.24	12.13	13.39	14.17	14.96	16.53	18.11	18.58	19.68	22.83	25.98	29.13
1.060	50	5.013	53	5.314		6.06	7.64	9.53	10.79	11.57	12.36	13.93	15.51	15.98	17.08	20.23	23.38	26.53
1.060	67	6.717	71	7.118					8.03	8.82	9.60	11.18	12.75	13.23	14.33	17.48	20.63	23.78
1.061	33	3.308	35	3.509	7.25	8.82	10.40	12.29	13.55	14.33	15.12	16.69	18.27	18.74	19.84	22.99	26.14	29.29
1.063	32	3.208	34	3.409	7.40	8.98	10.55	12.44	13.70	14.49	15.27	16.85	18.42	18.90	20.00	23.15	26.30	29.45
1.063	63	6.316	67	6.717				7.40	8.66	9.45	10.23	11.81	13.38	13.86	14.96	18.11	21.26	24.41
1.065	31	3.108	33	3.308	7.56	9.14	10.71	12.60	13.86	14.65	15.43	17.01	18.58	19.06	20.16	23.31	26.46	29.61
1.067	30	3.008	32	3.208	7.72	9.29	10.87	12.76	14.02	14.80	15.59	17.16	18.74	19.21	20.31	23.46	26.61	29.76
1.067	45	4.511	48	4.812	5.28	6.85	8.43	10.32	11.58	12.36	13.15	14.72	16.30	16.77	17.87	21.02	24.17	27.32
1.067	75	7.519	80	8.020								9.84	11.41	11.89	12.99	16.14	19.29	22.44
1.069	29	2.907	31	3.108	7.88	9.45	11.03	12.92	14.18	14.96	15.75	17.32	18.90	19.37	20.47	23.62	26.77	29.92
1.071	28	2.807	30	3.008	8.03	9.61	11.18	13.07	14.33	15.12	15.90	17.48	19.05	19.53	20.63	23.78	26.93	30.08
1.071	42	4.211	45	4.511	5.75	7.32	8.90	10.79	12.05	12.83	13.62	15.19	16.77	17.24	18.34	21.49	24.64	27.79
1.071	56	5.614	60	6.015			6.61	8.50	9.76	10.55	11.33	12.91	14.49	14.96	16.06	19.21	22.36	25.51
1.074	27	2.707	29	2.907	8.19	9.77	11.34	13.23	14.49	15.28	16.06	17.64	19.21	19.69	20.79	23.94	27.09	30.24
1.077	26	2.607	28	2.807	8.35	9.92	11.50	13.39	14.65	15.43	16.22	17.79	19.37	19.84	20.94	24.09	27.24	30.39
1.077	39	3.910	42	4.211	6.22	7.80	9.37	11.26	12.52	13.31	14.09	15.67	17.24	17.72	18.82	21.97	25.12	28.27
1.079	38	3.810	41	4.110	6.38	7.95	9.53	11.42	12.68	13.46	14.25	15.82	17.40	17.87	18.97	22.12	25.27	28.42
1.080	25	2.506	27	2.707	8.51	10.08	11.66	13.55	14.81	15.59	16.38	17.95	19.53	20.00	21.10	24.25	27.40	30.55
1.081	37	3.709	40	4.010	6.54	8.11	9.69	11.58	12.84	13.62	14.41	15.98	17.56	18.03	19.13	22.28	25.43	28.58
Length Factor*					0.79	0.83	0.87	0.91	0.94	0.96	0.97	1.00	1.03	1.03	1.05	1.10	1.14	1.17

* The length correction factor must be used to determine the proper belt width.

SELECTION

8M HT500 Selection Table (Continued)

Speed Ratio	Sprocket Combinations: Driver No. of Teeth	Driver Pitch Dia. Inches	Driven No. of Teeth	Driven Pitch Dia. Inches	Center Distance, Inches: 1792-8MX	2000-8MX	2200-8MX	2240-8MX	2400-8MX	2520-8MX	2600-8MX	2800-8MX	2840-8MX	3048-8MX	3200-8MX	3280-8MX	3600-8MX	4000-8MX	4400-8MX	4480-8MX
Length Factor*					1.18	1.22	1.26	1.26	1.29	1.31	1.32	1.35	1.36	1.38	1.40	1.41	1.45	1.49	1.52	1.53
1.000	22	2.206	22	2.206	31.81	35.90	39.84	40.63	43.78	46.14	47.71	51.65	52.44	56.53	59.52	61.10	67.40	75.27	83.15	84.72
1.000	25	2.506	25	2.506	31.34	35.43	39.37	40.16	43.31	45.67	47.24	51.18	51.97	56.06	59.05	60.63	66.93	74.80	82.68	84.25
1.000	26	2.607	26	2.607	31.18	35.27	39.21	40.00	43.15	45.51	47.08	51.02	51.81	55.90	58.89	60.47	66.77	74.64	82.52	84.09
1.000	27	2.707	27	2.707	31.02	35.12	39.05	39.84	42.99	45.35	46.93	50.87	51.65	55.75	58.74	60.31	66.61	74.49	82.36	83.94
1.000	28	2.807	28	2.807	30.87	34.96	38.90	39.69	42.84	45.20	46.77	50.71	51.50	55.59	58.58	60.16	66.46	74.33	82.21	83.78
1.000	29	2.907	29	2.907	30.71	34.80	38.74	39.53	42.68	45.04	46.61	50.55	51.34	55.43	58.42	60.00	66.30	74.17	82.05	83.62
1.000	30	3.008	30	3.008	30.55	34.65	38.58	39.37	42.52	44.88	46.46	50.40	51.18	55.28	58.27	59.84	66.14	74.02	81.89	83.47
1.000	31	3.108	31	3.108	30.39	34.49	38.42	39.21	42.36	44.72	46.30	50.24	51.02	55.12	58.11	59.68	65.98	73.86	81.73	83.31
1.000	32	3.208	32	3.208	30.24	34.33	38.27	39.06	42.21	44.57	46.14	50.08	50.87	54.96	57.95	59.53	65.83	73.70	81.58	83.15
1.000	33	3.308	33	3.308	30.08	34.17	38.11	38.90	42.05	44.41	45.98	49.92	50.71	54.80	57.79	59.37	65.67	73.54	81.42	82.99
1.000	34	3.409	34	3.409	29.92	34.02	37.95	38.74	41.89	44.25	45.83	49.77	50.55	54.65	57.64	59.21	65.51	73.39	81.26	82.84
1.000	35	3.509	35	3.509	29.76	33.86	37.79	38.58	41.73	44.09	45.67	49.61	50.39	54.49	57.48	59.05	65.35	73.23	81.10	82.68
1.000	36	3.609	36	3.609	29.61	33.70	37.64	38.43	41.58	43.94	45.51	49.45	50.24	54.33	57.32	58.90	65.20	73.07	80.95	82.52
1.000	37	3.709	37	3.709	29.45	33.54	37.48	38.27	41.42	43.78	45.35	49.29	50.08	54.17	57.16	58.74	65.04	72.91	80.79	82.36
1.000	38	3.810	38	3.810	29.29	33.39	37.32	38.11	41.26	43.62	45.20	49.14	49.92	54.02	57.01	58.58	64.88	72.76	80.63	82.21
1.000	39	3.910	39	3.910	29.13	33.23	37.16	37.95	41.10	43.46	45.04	48.98	49.76	53.86	56.85	58.42	64.72	72.60	80.47	82.05
1.000	40	4.010	40	4.010	28.98	33.07	37.01	37.80	40.95	43.31	44.88	48.82	49.61	53.70	56.69	58.27	64.57	72.44	80.32	81.89
1.000	41	4.110	41	4.110	28.82	32.91	36.85	37.64	40.79	43.15	44.72	48.66	49.45	53.54	56.53	58.11	64.41	72.28	80.16	81.73
1.000	42	4.211	42	4.211	28.66	32.76	36.69	37.48	40.63	42.99	44.57	48.51	49.29	53.39	56.38	57.95	64.25	72.13	80.00	81.58
1.000	45	4.511	45	4.511	28.19	32.28	36.22	37.01	40.16	42.52	44.09	48.03	48.82	52.91	55.90	57.48	63.78	71.65	79.53	81.10
1.000	48	4.812	48	4.812	27.72	31.81	35.75	36.54	39.69	42.05	43.62	47.56	48.35	52.44	55.43	57.01	63.31	71.18	79.06	80.63
1.000	50	5.013	50	5.013	27.40	31.50	35.43	36.22	39.37	41.73	43.31	47.25	48.03	52.13	55.12	56.69	62.99	70.87	78.74	80.32
1.000	53	5.314	53	5.314	26.93	31.02	34.96	35.75	38.90	41.26	42.83	46.77	47.56	51.65	54.64	56.22	62.52	70.39	78.27	79.84
1.000	56	5.614	56	5.614	26.46	30.55	34.49	35.28	38.43	40.79	42.36	46.30	47.09	51.18	54.17	55.75	62.05	69.92	77.80	79.37
1.000	60	6.015	60	6.015	25.83	29.92	33.86	34.65	37.80	40.16	41.73	45.67	46.46	50.55	53.54	55.12	61.42	69.29	77.17	78.74
1.000	63	6.316	63	6.316	25.35	29.45	33.38	34.17	37.32	39.68	41.26	45.20	45.98	50.08	53.07	54.64	60.94	68.82	76.69	78.27
1.000	67	6.717	67	6.717	24.72	28.82	32.75	33.54	36.69	39.05	40.63	44.57	45.35	49.45	52.44	54.01	60.31	68.19	76.06	77.64
1.000	71	7.118	71	7.118	24.09	28.19	32.12	32.91	36.06	38.42	40.00	43.94	44.72	48.82	51.81	53.38	59.68	67.56	75.43	77.01
1.000	75	7.519	75	7.519	23.46	27.56	31.49	32.28	35.43	37.79	39.37	43.31	44.09	48.19	51.18	52.75	59.05	66.93	74.80	76.38
1.000	80	8.020	80	8.020	22.68	26.77	30.71	31.50	34.65	37.01	38.58	42.52	43.31	47.40	50.39	51.97	58.27	66.14	74.02	75.59
1.024	41	4.110	42	4.211	28.74	32.83	36.77	37.56	40.71	43.07	44.64	48.58	49.37	53.46	56.45	58.03	64.33	72.20	80.08	81.65
1.025	40	4.010	41	4.110	28.90	32.99	36.93	37.72	40.87	43.23	44.80	48.74	49.53	53.62	56.61	58.19	64.49	72.36	80.24	81.81
1.026	38	3.810	39	3.910	29.21	33.31	37.24	38.03	41.18	43.54	45.12	49.06	49.84	53.94	56.93	58.50	64.80	72.68	80.55	82.13
1.026	39	3.910	40	4.010	29.05	33.15	37.08	37.87	41.02	43.38	44.96	48.90	49.68	53.78	56.77	58.34	64.64	72.52	80.39	81.97
1.027	37	3.709	38	3.810	29.37	33.46	37.40	38.19	41.34	43.70	45.27	49.21	50.00	54.09	57.08	58.66	64.96	72.83	80.71	82.28
1.028	36	3.609	37	3.709	29.53	33.62	37.56	38.35	41.50	43.86	45.43	49.37	50.16	54.25	57.24	58.82	65.12	72.99	80.87	82.44
1.029	34	3.409	35	3.509	29.84	33.94	37.87	38.66	41.81	44.17	45.75	49.69	50.47	54.57	57.56	59.13	65.43	73.31	81.18	82.76
1.029	35	3.509	36	3.609	29.68	33.78	37.71	38.50	41.65	44.01	45.59	49.53	50.31	54.41	57.40	58.97	65.27	73.15	81.02	82.60
1.030	33	3.308	34	3.409	30.00	34.09	38.03	38.82	41.97	44.33	45.90	49.84	50.63	54.72	57.71	59.29	65.59	73.46	81.34	82.91
1.031	32	3.208	33	3.308	30.16	34.25	38.19	38.98	42.13	44.49	46.06	50.00	50.79	54.88	57.87	59.45	65.75	73.62	81.50	83.07
1.032	31	3.108	32	3.208	30.31	34.41	38.34	39.13	42.28	44.64	46.22	50.16	50.94	55.04	58.03	59.60	65.90	73.78	81.65	83.23
1.033	30	3.008	31	3.108	30.47	34.57	38.50	39.29	42.44	44.80	46.38	50.32	51.10	55.20	58.19	59.76	66.06	73.94	81.81	83.39
1.034	29	2.907	30	3.008	30.63	34.72	38.66	39.45	42.60	44.96	46.53	50.47	51.26	55.35	58.34	59.92	66.22	74.09	81.97	83.54
1.036	28	2.807	29	2.907	30.79	34.88	38.82	39.61	42.76	45.12	46.69	50.63	51.42	55.51	58.50	60.08	66.38	74.25	82.13	83.70
1.037	27	2.707	28	2.807	30.94	35.04	38.97	39.76	42.91	45.27	46.85	50.79	51.57	55.67	58.66	60.23	66.53	74.41	82.28	83.86
1.038	26	2.607	27	2.707	31.10	35.20	39.13	39.92	43.07	45.43	47.01	50.95	51.73	55.83	58.82	60.39	66.69	74.57	82.44	84.02
1.040	25	2.506	26	2.607	31.26	35.35	39.29	40.08	43.23	45.59	47.16	51.10	51.89	55.98	58.97	60.55	66.85	74.72	82.60	84.17
1.042	48	4.812	50	5.013	27.56	31.65	35.59	36.38	39.53	41.89	43.46	47.40	48.19	52.28	55.27	56.85	63.15	71.02	78.90	80.47
1.050	40	4.010	42	4.211	28.82	32.91	36.85	37.64	40.79	43.15	44.72	48.66	49.45	53.54	56.53	58.11	64.41	72.28	80.16	81.73
1.050	60	6.015	63	6.316	25.59	29.68	33.62	34.41	37.56	39.92	41.49	45.44	46.22	50.32	53.31	54.88	61.18	69.06	76.93	78.51
1.051	39	3.910	41	4.110	28.98	33.07	37.01	37.80	40.95	43.31	44.88	48.82	49.61	53.70	56.69	58.27	64.57	72.44	80.32	81.89
1.053	38	3.810	40	4.010	29.13	33.23	37.16	37.95	41.10	43.46	45.04	48.98	49.76	53.86	56.85	58.42	64.72	72.60	80.47	82.05
1.054	37	3.709	39	3.910	29.29	33.39	37.32	38.11	41.26	43.62	45.20	49.14	49.92	54.02	57.01	58.58	64.88	72.76	80.63	82.21
1.056	36	3.609	38	3.810	29.45	33.54	37.48	38.27	41.42	43.78	45.35	49.29	50.08	54.17	57.16	58.74	65.04	72.91	80.79	82.36
1.056	71	7.118	75	7.519	23.78	27.87	31.81	32.60	35.75	38.11	39.68	43.62	44.41	48.50	51.49	53.07	59.37	67.24	75.12	76.69
1.057	35	3.509	37	3.709	29.61	33.70	37.64	38.43	41.58	43.94	45.51	49.45	50.24	54.33	57.32	58.90	65.20	73.07	80.95	82.52
1.057	53	5.314	56	5.614	26.69	30.79	34.72	35.51	38.66	41.02	42.60	46.54	47.32	51.42	54.41	55.98	62.28	70.16	78.03	79.61
1.059	34	3.409	36	3.609	29.76	33.86	37.79	38.58	41.73	44.09	45.67	49.61	50.39	54.49	57.48	59.05	65.35	73.23	81.10	82.68
1.060	50	5.013	53	5.314	27.16	31.26	35.19	35.98	39.13	41.49	43.07	47.01	47.79	51.89	54.88	56.45	62.75	70.63	78.50	80.08
1.060	67	6.717	71	7.118	24.41	28.50	32.44	33.23	36.38	38.74	40.31	44.25	45.04	49.13	52.12	53.70	60.00	67.87	75.75	77.32
1.061	33	3.308	35	3.509	29.92	34.02	37.95	38.74	41.89	44.25	45.83	49.77	50.55	54.65	57.64	59.21	65.51	73.39	81.26	82.84
1.063	32	3.208	34	3.409	30.08	34.17	38.11	38.90	42.05	44.41	45.98	49.92	50.71	54.80	57.79	59.37	65.67	73.54	81.42	82.99
1.063	63	6.316	67	6.717	25.04	29.13	33.07	33.86	37.01	39.37	40.94	44.88	45.67	49.76	52.75	54.33	60.63	68.50	76.38	77.95
1.065	31	3.108	33	3.308	30.24	34.33	38.27	39.06	42.21	44.57	46.14	50.08	50.87	54.96	57.95	59.53	65.83	73.70	81.58	83.15
1.067	30	3.008	32	3.208	30.39	34.49	38.42	39.21	42.36	44.72	46.30	50.24	51.02	55.12	58.11	59.68	65.98	73.86	81.73	83.31
1.067	45	4.511	48	4.812	27.95	32.05	35.98	36.77	39.92	42.28	43.86	47.80	48.58	52.68	55.67	57.24	63.54	71.42	79.29	80.87
1.067	75	7.519	80	8.020	23.07	27.16	31.10	31.89	35.04	37.40	38.97	42.91	43.70	47.80	50.79	52.36	58.66	66.54	74.41	75.99
1.069	29	2.907	31	3.108	30.55	34.65	38.58	39.37	42.52	44.88	46.46	50.40	51.18	55.28	58.27	59.84	66.14	74.02	81.89	83.47
1.071	28	2.807	30	3.008	30.71	34.80	38.74	39.53	42.68	45.04	46.61	50.55	51.34	55.43	58.42	60.00	66.30	74.17	82.05	83.62
1.071	42	4.211	45	4.511	28.42	32.52	36.45	37.24	40.39	42.75	44.33	48.27	49.05	53.15	56.14	57.71	64.01	71.89	79.76	81.34
1.071	56	5.614	60	6.015	26.14	30.24	34.17	34.96	38.11	40.47	42.05	45.99	46.77	50.87	53.86	55.43	61.73	69.61	77.48	79.06
1.074	27	2.707	29	2.907	30.87	34.96	38.90	39.69	42.84	45.20	46.77	50.71	51.50	55.59	58.58	60.16	66.46	74.33	82.21	83.78
1.077	26	2.607	28	2.807	31.02	35.12	39.05	39.84	42.99	45.35	46.93	50.87	51.65	55.75	58.74	60.31	66.61	74.49	82.36	83.94
1.077	39	3.910	42	4.211	28.90	32.99	36.93	37.72	40.87	43.23	44.80	48.74	49.53	53.62	56.61	58.19	64.49	72.36	80.24	81.81
1.079	38	3.810	41	4.110	29.05	33.15	37.08	37.87	41.02	43.38	44.96	48.90	49.68	53.78	56.77	58.34	64.64	72.52	80.39	81.97
1.080	25	2.506	27	2.707	31.18	35.28	39.21	40.00	43.15	45.51	47.09	51.03	51.81	55.91	58.90	60.47	66.77	74.65	82.52	84.10
1.081	37	3.709	40	4.010	29.21	33.31	37.24	38.03	41.18	43.54	45.12	49.06	49.84	53.94	56.93	58.50	64.80	72.68	80.55	82.13
Length Factor*					1.18	1.22	1.26	1.26	1.29	1.31	1.32	1.35	1.36	1.38	1.40	1.41	1.45	1.49	1.52	1.53

* The length correction factor must be used to determine the proper belt width.

8M HT500 Selection Table

Speed Ratio	Sprocket Combinations				Center Distance, Inches													
	Driver		Driven															
	No. of Teeth	Pitch Dia. Inches	No. of Teeth	Pitch Dia. Inches	640-8MX	720-8MX	800-8MX	896-8MX	960-8MX	1000-8MX	1040-8MX	1120-8MX	1200-8MX	1224-8MX	1280-8MX	1440-8MX	1600-8MX	1760-8MX
Length Factor*					0.79	0.83	0.87	0.91	0.94	0.96	0.97	1.00	1.03	1.03	1.05	1.10	1.14	1.17
1.083	36	3.609	39	3.910	6.69	8.27	9.84	11.73	12.99	13.78	14.56	16.14	17.71	18.19	19.29	22.44	25.59	28.74
1.086	35	3.509	38	3.810	6.85	8.43	10.00	11.89	13.15	13.94	14.72	16.30	17.87	18.35	19.45	22.60	25.75	28.90
1.088	34	3.409	37	3.709	7.01	8.58	10.16	12.05	13.31	14.09	14.88	16.45	18.03	18.50	19.60	22.75	25.90	29.05
1.091	33	3.308	36	3.609	7.17	8.74	10.32	12.21	13.47	14.25	15.04	16.61	18.19	18.66	19.76	22.91	26.06	29.21
1.094	32	3.208	35	3.509	7.32	8.90	10.47	12.36	13.62	14.41	15.19	16.77	18.34	18.82	19.92	23.07	26.22	29.37
1.097	31	3.108	34	3.409	7.48	9.06	10.63	12.52	13.78	14.57	15.35	16.93	18.50	18.98	20.08	23.23	26.38	29.53
1.098	41	4.110	45	4.511	5.83	7.40	8.98	10.87	12.13	12.91	13.70	15.27	16.85	17.32	18.42	21.57	24.72	27.87
1.100	30	3.008	33	3.308	7.64	9.21	10.79	12.68	13.94	14.72	15.51	17.08	18.66	19.13	20.23	23.38	26.53	29.68
1.103	29	2.907	32	3.208	7.80	9.37	10.95	12.84	14.10	14.88	15.67	17.24	18.82	19.29	20.39	23.54	26.69	29.84
1.104	48	4.812	53	5.314		6.22	7.79	9.68	10.94	11.73	12.51	14.09	15.67	16.14	17.24	20.39	23.54	26.69
1.105	38	3.810	42	4.211	6.30	7.87	9.45	11.34	12.60	13.38	14.17	15.74	17.32	17.79	18.89	22.04	25.19	28.34
1.107	28	2.807	31	3.108	7.95	9.53	11.10	12.99	14.25	15.04	15.82	17.40	18.97	19.45	20.55	23.70	26.85	30.00
1.108	37	3.709	41	4.110	6.46	8.03	9.61	11.50	12.76	13.54	14.33	15.90	17.48	17.95	19.05	22.20	25.35	28.50
1.111	27	2.707	30	3.008	8.11	9.69	11.26	13.15	14.41	15.20	15.98	17.56	19.13	19.61	20.71	23.86	27.01	30.16
1.111	36	3.609	40	4.010	6.61	8.19	9.76	11.65	12.91	13.70	14.48	16.06	17.63	18.11	19.21	22.36	25.51	28.66
1.111	45	4.511	50	5.013		6.69	8.27	10.16	11.42	12.20	12.99	14.56	16.14	16.61	17.71	20.86	24.01	27.16
1.114	35	3.509	39	3.910	6.77	8.35	9.92	11.81	13.07	13.86	14.64	16.22	17.79	18.27	19.37	22.52	25.67	28.82
1.115	26	2.607	29	2.907	8.27	9.84	11.42	13.31	14.57	15.35	16.14	17.71	19.29	19.76	20.86	24.01	27.16	30.31
1.117	60	6.015	67	6.717				7.63	8.89	9.68	10.46	12.04	13.62	14.09	15.19	18.34	21.49	24.64
1.118	34	3.409	38	3.810	6.93	8.50	10.08	11.97	13.23	14.01	14.80	16.37	17.95	18.42	19.52	22.67	25.82	28.97
1.119	67	6.717	75	7.519					7.71	8.49	9.28	10.86	12.43	12.91	14.01	17.16	20.31	23.46
1.120	25	2.506	28	2.807	8.43	10.00	11.58	13.47	14.73	15.51	16.30	17.87	19.45	19.92	21.02	24.17	27.32	30.47
1.120	50	5.013	56	5.614		5.82	7.40	9.29	10.55	11.33	12.12	13.70	15.27	15.75	16.85	20.00	23.15	26.30
1.121	33	3.308	37	3.709	7.09	8.66	10.24	12.13	13.39	14.17	14.96	16.53	18.11	18.58	19.68	22.83	25.98	29.13
1.125	32	3.208	36	3.609	7.24	8.82	10.39	12.28	13.54	14.33	15.11	16.69	18.26	18.74	19.84	22.99	26.14	29.29
1.125	40	4.010	45	4.511	5.90	7.48	9.05	10.94	12.21	12.99	13.78	15.35	16.93	17.40	18.50	21.65	24.80	27.95
1.125	56	5.614	63	6.316				8.26	9.52	10.31	11.09	12.67	14.25	14.72	15.82	18.97	22.12	25.27
1.125	80	8.020	90	9.023									10.22	10.70	11.80	14.95	18.10	21.25
1.127	63	6.316	71	7.118					8.34	9.13	9.91	11.49	13.06	13.54	14.64	17.79	20.94	24.09
1.127	71	7.118	80	8.020							8.57	10.15	11.72	12.20	13.30	16.45	19.60	22.75
1.129	31	3.108	35	3.509	7.40	8.98	10.55	12.44	13.70	14.49	15.27	16.85	18.42	18.90	20.00	23.15	26.30	29.45
1.132	53	5.314	60	6.015			6.84	8.74	10.00	10.78	11.57	13.14	14.72	15.19	16.29	19.44	22.59	25.74
1.133	30	3.008	34	3.409	7.56	9.13	10.71	12.60	13.86	14.64	15.43	17.00	18.58	19.05	20.15	23.30	26.45	29.60
1.135	37	3.709	42	4.211	6.37	7.95	9.53	11.42	12.68	13.46	14.25	15.82	17.40	17.87	18.97	22.12	25.27	28.42
1.136	22	2.206	25	2.506	8.90	10.47	12.05	13.94	15.20	15.98	16.77	18.34	19.92	20.39	21.49	24.64	27.79	30.94
1.138	29	2.907	33	3.308	7.72	9.29	10.87	12.76	14.02	14.80	15.59	17.16	18.74	19.21	20.31	23.46	26.61	29.76
1.139	36	3.609	41	4.110	6.53	8.11	9.68	11.57	12.84	13.62	14.41	15.98	17.56	18.03	19.13	22.28	25.43	28.58
1.143	28	2.807	32	3.208	7.87	9.45	11.02	12.91	14.17	14.96	15.74	17.32	18.89	19.37	20.47	23.62	26.77	29.92
1.143	35	3.509	40	4.010	6.69	8.27	9.84	11.73	12.99	13.78	14.56	16.14	17.71	18.19	19.29	22.44	25.59	28.74
1.143	42	4.211	48	4.812	5.51	7.08	8.66	10.55	11.81	12.59	13.38	14.96	16.53	17.01	18.11	21.26	24.41	27.56
1.147	34	3.409	39	3.910	6.85	8.42	10.00	11.89	13.15	13.93	14.72	16.29	17.87	18.34	19.45	22.60	25.75	28.90
1.148	27	2.707	31	3.108	8.03	9.61	11.18	13.07	14.33	15.12	15.90	17.48	19.05	19.53	20.63	23.78	26.93	30.08
1.152	33	3.308	38	3.810	7.01	8.58	10.16	12.05	13.31	14.09	14.88	16.45	18.03	18.50	19.60	22.75	25.90	29.05
1.154	26	2.607	30	3.008	8.19	9.76	11.34	13.23	14.49	15.27	16.06	17.63	19.21	19.68	20.78	23.93	27.08	30.23
1.154	39	3.910	45	4.511	5.98	7.56	9.13	11.02	12.28	13.07	13.85	15.43	17.00	17.48	18.58	21.73	24.88	28.03
1.156	32	3.208	37	3.709	7.16	8.74	10.31	12.20	13.47	14.25	15.04	16.61	18.19	18.66	19.76	22.91	26.06	29.21
1.160	25	2.506	29	2.907	8.35	9.92	11.50	13.39	14.65	15.43	16.22	17.79	19.37	19.84	20.94	24.09	27.24	30.39
1.161	31	3.108	36	3.609	7.32	8.90	10.47	12.36	13.62	14.41	15.19	16.77	18.34	18.82	19.92	23.07	26.22	29.37
1.167	30	3.008	35	3.509	7.48	9.05	10.63	12.52	13.78	14.56	15.35	16.92	18.50	18.97	20.07	23.23	26.38	29.53
1.167	36	3.609	42	4.211	6.45	8.03	9.60	11.49	12.75	13.54	14.33	15.90	17.48	17.95	19.05	22.20	25.35	28.50
1.167	48	4.812	56	5.614		5.97	7.55	9.44	10.70	11.49	12.27	13.85	15.43	15.90	17.00	20.15	23.30	26.45
1.171	35	3.509	41	4.110	6.61	8.19	9.76	11.65	12.91	13.70	14.48	16.06	17.63	18.11	19.21	22.36	25.51	28.66
1.171	41	4.110	48	4.812	5.58	7.16	8.74	10.63	11.89	12.67	13.46	15.03	16.61	17.08	18.18	21.33	24.49	27.64
1.172	29	2.907	34	3.409	7.64	9.21	10.79	12.68	13.94	14.72	15.51	17.08	18.66	19.13	20.23	23.38	26.53	29.68
1.176	34	3.409	40	4.010	6.77	8.34	9.92	11.81	13.07	13.85	14.64	16.22	17.79	18.27	19.37	22.52	25.67	28.82
1.178	45	4.511	53	5.314		6.45	8.02	9.92	11.18	11.96	12.75	14.32	15.90	16.37	17.47	20.62	23.78	26.93
1.179	28	2.807	33	3.308	7.79	9.37	10.94	12.83	14.10	14.88	15.67	17.24	18.82	19.29	20.39	23.54	26.69	29.84
1.182	22	2.206	26	2.607	8.82	10.39	11.97	13.86	15.12	15.90	16.69	18.26	19.84	20.31	21.41	24.56	27.71	30.86
1.182	33	3.308	39	3.910	6.92	8.50	10.08	11.97	13.23	14.01	14.80	16.37	17.95	18.42	19.52	22.67	25.82	28.97
1.183	60	6.015	71	7.118				7.30	8.57	9.35	10.14	11.72	13.29	13.77	14.87	18.02	21.17	24.32
1.184	38	3.810	45	4.511	6.05	7.63	9.21	11.10	12.36	13.15	13.93	15.51	17.08	17.56	18.66	21.81	24.96	28.11
1.185	27	2.707	32	3.208	7.95	9.53	11.10	12.99	14.25	15.04	15.82	17.40	18.97	19.45	20.55	23.70	26.85	30.00
1.188	32	3.208	38	3.810	7.08	8.66	10.23	12.12	13.38	14.17	14.96	16.53	18.11	18.58	19.68	22.83	25.98	29.13
1.189	53	5.314	63	6.316			6.60	8.49	9.75	10.54	11.32	12.90	14.48	14.95	16.05	19.20	22.36	25.51
1.190	42	4.211	50	5.013	5.34	6.92	8.50	10.39	11.65	12.43	13.22	14.80	16.37	16.85	17.95	21.10	24.25	27.40
1.190	63	6.316	75	7.519					8.01	8.80	9.59	11.16	12.74	13.22	14.32	17.47	20.62	23.77
1.192	26	2.607	31	3.108	8.11	9.68	11.26	13.15	14.41	15.19	15.98	17.55	19.13	19.60	20.70	23.86	27.01	30.16
1.194	31	3.108	37	3.709	7.24	8.82	10.39	12.28	13.54	14.33	15.11	16.69	18.26	18.74	19.84	22.99	26.14	29.29
1.194	67	6.717	80	8.020						8.08	8.87	10.45	12.03	12.50	13.60	16.76	19.91	23.06
1.196	56	5.614	67	6.717				7.94	9.20	9.99	10.77	12.35	13.92	14.40	15.50	18.65	21.80	24.95
1.200	25	2.506	30	3.008	8.27	9.84	11.42	13.31	14.57	15.35	16.14	17.71	19.29	19.76	20.86	24.01	27.16	30.31
1.200	30	3.008	36	3.609	7.40	8.97	10.55	12.44	13.70	14.48	15.27	16.85	18.42	18.90	20.00	23.15	26.30	29.45
1.200	35	3.509	42	4.211	6.53	8.10	9.68	11.57	12.83	13.62	14.40	15.98	17.55	18.03	19.13	22.28	25.43	28.58
1.200	40	4.010	48	4.812	5.66	7.24	8.81	10.70	11.96	12.75	13.54	15.11	16.69	17.16	18.26	21.41	24.56	27.71
1.200	50	5.013	60	6.015			7.07	8.96	10.23	11.01	11.80	13.37	14.95	15.43	16.53	19.68	22.83	25.98
1.200	75	7.519	90	9.023								9.02	10.60	11.08	12.18	15.33	18.49	21.64
1.206	34	3.409	41	4.110	6.69	8.26	9.84	11.73	12.99	13.78	14.56	16.14	17.71	18.19	19.29	22.44	25.59	28.74
Length Factor*					0.79	0.83	0.87	0.91	0.94	0.96	0.97	1.00	1.03	1.03	1.05	1.10	1.14	1.17

* The length correction factor must be used to determine the proper belt width.

SELECTION

8M HT500 Selection Table (Continued)

Speed Ratio	Sprocket Combinations: Driver No. of Teeth	Driver Pitch Dia. Inches	Driven No. of Teeth	Driven Pitch Dia. Inches	Center Distance, Inches: 1792-8MX	2000-8MX	2200-8MX	2240-8MX	2400-8MX	2520-8MX	2600-8MX	2800-8MX	2840-8MX	3048-8MX	3200-8MX	3280-8MX	3600-8MX	4000-8MX	4400-8MX	4480-8MX
Length Factor*					1.18	1.22	1.26	1.26	1.29	1.31	1.32	1.35	1.36	1.38	1.40	1.41	1.45	1.49	1.52	1.53
1.000	22	2.206	22	2.206	29.37	33.46	37.40	38.19	41.34	43.70	45.27	49.21	50.00	54.09	57.08	58.66	64.96	72.83	80.71	82.28
1.000	25	2.506	25	2.506	29.53	33.62	37.56	38.35	41.50	43.86	45.43	49.37	50.16	54.25	57.24	58.82	65.12	72.99	80.87	82.44
1.000	26	2.607	26	2.607	29.68	33.78	37.71	38.50	41.65	44.01	45.59	49.53	50.31	54.41	57.40	58.97	65.27	73.15	81.02	82.60
1.000	27	2.707	27	2.707	29.84	33.94	37.87	38.66	41.81	44.17	45.75	49.69	50.47	54.57	57.56	59.13	65.43	73.31	81.18	82.76
1.000	28	2.807	28	2.807	30.00	34.09	38.03	38.82	41.97	44.33	45.90	49.84	50.63	54.72	57.71	59.29	65.59	73.46	81.34	82.91
1.000	29	2.907	29	2.907	30.16	34.25	38.19	38.98	42.13	44.49	46.06	50.00	50.79	54.88	57.87	59.45	65.75	73.62	81.50	83.07
1.000	30	3.008	30	3.008	28.50	32.60	36.53	37.32	40.47	42.83	44.41	48.35	49.13	53.23	56.22	57.79	64.09	71.97	79.84	81.42
1.000	31	3.108	31	3.108	30.31	34.41	38.34	39.13	42.28	44.64	46.22	50.16	50.94	55.04	58.03	59.60	65.90	73.78	81.65	83.23
1.000	32	3.208	32	3.208	30.47	34.57	38.50	39.29	42.44	44.80	46.38	50.32	51.10	55.20	58.19	59.76	66.06	73.94	81.81	83.39
1.000	33	3.308	33	3.308	27.32	31.42	35.35	36.14	39.29	41.65	43.23	47.17	47.95	52.05	55.04	56.61	62.91	70.79	78.66	80.24
1.000	34	3.409	34	3.409	28.97	33.07	37.00	37.79	40.94	43.30	44.88	48.82	49.60	53.70	56.69	58.26	64.57	72.44	80.32	81.89
1.000	35	3.509	35	3.509	30.63	34.72	38.66	39.45	42.60	44.96	46.53	50.47	51.26	55.35	58.34	59.92	66.22	74.09	81.97	83.54
1.000	36	3.609	36	3.609	29.13	33.23	37.16	37.95	41.10	43.46	45.04	48.98	49.76	53.86	56.85	58.42	64.72	72.60	80.47	82.05
1.000	37	3.709	37	3.709	30.79	34.88	38.82	39.61	42.76	45.12	46.69	50.63	51.42	55.51	58.50	60.08	66.38	74.25	82.13	83.70
1.000	38	3.810	38	3.810	29.29	33.39	37.32	38.11	41.26	43.62	45.20	49.14	49.92	54.02	57.01	58.58	64.88	72.76	80.63	82.21
1.000	39	3.910	39	3.910	27.79	31.89	35.82	36.61	39.76	42.12	43.70	47.64	48.42	52.52	55.51	57.08	63.38	71.26	79.13	80.71
1.000	40	4.010	40	4.010	29.45	33.54	37.48	38.27	41.42	43.78	45.35	49.29	50.08	54.17	57.16	58.74	65.04	72.91	80.79	82.36
1.000	41	4.110	41	4.110	30.94	35.04	38.97	39.76	42.91	45.27	46.85	50.79	51.57	55.67	58.66	60.23	66.53	74.41	82.28	83.86
1.000	42	4.211	42	4.211	25.27	29.37	33.30	34.09	37.24	39.60	41.18	45.12	45.90	50.00	52.99	54.56	60.86	68.74	76.61	78.19
1.000	45	4.511	45	4.511	29.60	33.70	37.63	38.42	41.57	43.93	45.51	49.45	50.23	54.33	57.32	58.89	65.19	73.07	80.94	82.52
1.000	48	4.812	48	4.812	24.09	28.19	32.12	32.91	36.06	38.42	40.00	43.94	44.72	48.82	51.81	53.38	59.68	67.56	75.43	77.01
1.000	50	5.013	50	5.013	31.10	35.20	39.13	39.92	43.07	45.43	47.01	50.95	51.73	55.83	58.82	60.39	66.69	74.57	82.44	84.02
1.000	53	5.314	53	5.314	26.93	31.02	34.96	35.75	38.90	41.26	42.83	46.77	47.56	51.65	54.64	56.22	62.52	70.39	78.27	79.84
1.000	56	5.614	56	5.614	29.76	33.86	37.79	38.58	41.73	44.09	45.67	49.61	50.39	54.49	57.48	59.05	65.35	73.23	81.10	82.68
1.000	60	6.015	60	6.015	29.92	34.02	37.95	38.74	41.89	44.25	45.83	49.77	50.55	54.65	57.64	59.21	65.51	73.39	81.26	82.84
1.000	63	6.316	63	6.316	28.58	32.68	36.61	37.40	40.55	42.91	44.49	48.43	49.21	53.31	56.30	57.87	64.17	72.05	79.92	81.50
1.000	67	6.717	67	6.717	25.90	30.00	33.93	34.72	37.87	40.23	41.81	45.75	46.53	50.63	53.62	55.19	61.49	69.37	77.24	78.82
1.000	71	7.118	71	7.118	21.88	25.98	29.92	30.71	33.86	36.22	37.79	41.73	42.52	46.61	49.60	51.18	57.48	65.35	73.23	74.80
1.000	75	7.519	75	7.519	24.72	28.82	32.75	33.54	36.69	39.05	40.63	44.57	45.35	49.45	52.44	54.01	60.31	68.19	76.06	77.64
1.000	80	8.020	80	8.020	23.38	27.48	31.41	32.20	35.35	37.71	39.29	43.23	44.01	48.11	51.10	52.67	58.97	66.85	74.72	76.30
1.024	41	4.110	42	4.211	30.08	34.17	38.11	38.90	42.05	44.41	45.98	49.92	50.71	54.80	57.79	59.37	65.67	73.54	81.42	82.99
1.025	40	4.010	41	4.110	26.37	30.47	34.41	35.20	38.35	40.71	42.28	46.22	47.01	51.10	54.09	55.67	61.97	69.84	77.72	79.29
1.026	38	3.810	39	3.910	30.23	34.33	38.26	39.05	42.20	44.56	46.14	50.08	50.86	54.96	57.95	59.52	65.82	73.70	81.57	83.15
1.026	39	3.910	40	4.010	29.05	33.15	37.08	37.87	41.02	43.38	44.96	48.90	49.68	53.78	56.77	58.34	64.64	72.52	80.39	81.97
1.027	37	3.709	38	3.810	31.57	35.67	39.60	40.39	43.54	45.90	47.48	51.42	52.20	56.30	59.29	60.86	67.16	75.04	82.91	84.49
1.028	36	3.609	37	3.709	30.39	34.49	38.42	39.21	42.36	44.72	46.30	50.24	51.02	55.12	58.11	59.68	65.98	73.86	81.73	83.31
1.029	34	3.409	35	3.509	29.21	33.31	37.24	38.03	41.18	43.54	45.12	49.06	49.84	53.94	56.93	58.50	64.80	72.68	80.55	82.13
1.029	35	3.509	36	3.609	30.55	34.65	38.58	39.37	42.52	44.88	46.46	50.40	51.18	55.28	58.27	59.84	66.14	74.02	81.89	83.47
1.030	33	3.308	34	3.409	29.37	33.46	37.40	38.19	41.34	43.70	45.27	49.21	50.00	54.09	57.08	58.66	64.96	72.83	80.71	82.28
1.031	32	3.208	33	3.308	28.19	32.28	36.22	37.01	40.16	42.52	44.09	48.03	48.82	52.91	55.90	57.48	63.78	71.65	79.53	81.10
1.032	31	3.108	32	3.208	29.53	33.62	37.56	38.35	41.50	43.86	45.43	49.37	50.16	54.25	57.24	58.82	65.12	72.99	80.87	82.44
1.033	30	3.008	31	3.108	30.71	34.80	38.74	39.53	42.68	45.04	46.61	50.55	51.34	55.43	58.42	60.00	66.30	74.17	82.05	83.62
1.034	29	2.907	30	3.008	29.68	33.78	37.71	38.50	41.65	44.01	45.59	49.53	50.31	54.41	57.40	58.97	65.27	73.15	81.02	82.60
1.036	28	2.807	29	2.907	30.86	34.96	38.89	39.68	42.83	45.19	46.77	50.71	51.49	55.59	58.58	60.15	66.45	74.33	82.20	83.78
1.037	27	2.707	28	2.807	28.66	32.75	36.69	37.48	40.63	42.99	44.57	48.51	49.29	53.39	56.38	57.95	64.25	72.13	80.00	81.58
1.038	26	2.607	27	2.707	29.84	33.94	37.87	38.66	41.81	44.17	45.75	49.69	50.47	54.57	57.56	59.13	65.43	73.31	81.18	82.76
1.040	25	2.506	26	2.607	31.02	35.12	39.05	39.84	42.99	45.35	46.93	50.87	51.65	55.75	58.74	60.31	66.61	74.49	82.36	83.94
1.042	48	4.812	50	5.013	30.00	34.09	38.03	38.82	41.97	44.33	45.90	49.84	50.63	54.72	57.71	59.29	65.59	73.46	81.34	82.91
1.050	40	4.010	42	4.211	30.16	34.25	38.19	38.98	42.13	44.49	46.06	50.00	50.79	54.88	57.87	59.45	65.75	73.62	81.50	83.07
1.050	60	6.015	63	6.316	29.13	33.23	37.16	37.95	41.10	43.46	45.04	48.98	49.76	53.86	56.85	58.42	64.72	72.60	80.47	82.05
1.051	39	3.910	41	4.110	27.08	31.18	35.11	35.90	39.05	41.41	42.99	46.93	47.71	51.81	54.80	56.38	62.68	70.55	78.43	80.00
1.053	38	3.810	40	4.010	29.29	33.38	37.32	38.11	41.26	43.62	45.20	49.14	49.92	54.02	57.01	58.58	64.88	72.76	80.63	82.21
1.054	37	3.709	39	3.910	28.27	32.36	36.30	37.09	40.24	42.60	44.17	48.11	48.90	52.99	55.98	57.56	63.86	71.73	79.61	81.18
1.056	36	3.609	38	3.810	30.31	34.41	38.34	39.13	42.28	44.64	46.22	50.16	50.94	55.04	58.03	59.60	65.90	73.78	81.65	83.23
1.056	71	7.118	75	7.519	29.45	33.54	37.48	38.27	41.42	43.78	45.35	49.29	50.08	54.17	57.16	58.74	65.04	72.91	80.79	82.36
1.057	35	3.509	37	3.709	27.56	31.65	35.59	36.38	39.53	41.89	43.46	47.40	48.19	52.28	55.27	56.85	63.15	71.02	78.90	80.47
1.057	53	5.314	56	5.614	30.47	34.57	38.50	39.29	42.44	44.80	46.38	50.32	51.10	55.20	58.19	59.76	66.06	73.94	81.81	83.39
1.059	34	3.409	36	3.609	31.49	35.59	39.52	40.31	43.46	45.82	47.40	51.34	52.12	56.22	59.21	60.78	67.08	74.96	82.83	84.41
1.060	50	5.013	53	5.314	29.60	33.70	37.63	38.42	41.57	43.93	45.51	49.45	50.24	54.33	57.32	58.90	65.20	73.07	80.95	82.52
1.060	67	6.717	71	7.118	24.95	29.05	32.99	33.78	36.93	39.29	40.86	44.80	45.59	49.68	52.67	54.25	60.55	68.42	76.30	77.87
1.061	33	3.308	35	3.509	28.74	32.83	36.77	37.56	40.71	43.07	44.64	48.58	49.37	53.46	56.45	58.03	64.33	72.20	80.08	81.65
1.063	32	3.208	34	3.409	30.63	34.72	38.66	39.45	42.60	44.96	46.53	50.47	51.26	55.35	58.34	59.92	66.22	74.09	81.97	83.54
1.063	63	6.316	67	6.717	29.76	33.86	37.79	38.58	41.73	44.09	45.67	49.61	50.39	54.49	57.48	59.05	65.35	73.23	81.10	82.68
1.065	31	3.108	33	3.308	26.14	30.23	34.17	34.96	38.11	40.47	42.04	45.98	46.77	50.86	53.85	55.43	61.73	69.60	77.48	79.05
1.067	30	3.008	32	3.208	28.03	32.12	36.06	36.85	40.00	42.36	43.93	47.87	48.66	52.75	55.74	57.32	63.62	71.49	79.37	80.94
1.067	45	4.511	48	4.812	24.40	28.50	32.43	33.22	36.37	38.73	40.31	44.25	45.03	49.13	52.12	53.70	60.00	67.87	75.75	77.32
1.067	75	7.519	80	8.020	30.79	34.88	38.82	39.61	42.76	45.12	46.69	50.63	51.42	55.51	58.50	60.08	66.38	74.25	82.13	83.70
1.069	29	2.907	31	3.108	29.92	34.01	37.95	38.74	41.89	44.25	45.82	49.77	50.55	54.65	57.64	59.21	65.51	73.39	81.26	82.84
1.071	28	2.807	30	3.008	23.69	27.79	31.72	32.51	35.66	38.03	39.60	43.54	44.33	48.42	51.41	52.99	59.29	67.16	75.04	76.61
1.071	42	4.211	45	4.511	25.58	29.68	33.62	34.41	37.56	39.92	41.49	45.43	46.22	50.31	53.30	54.88	61.18	69.05	76.93	78.50
1.071	56	5.614	60	6.015	30.94	35.04	38.97	39.76	42.91	45.27	46.85	50.79	51.57	55.67	58.66	60.23	66.53	74.41	82.28	83.86
1.074	27	2.707	29	2.907	30.08	34.17	38.11	38.90	42.05	44.41	45.98	49.92	50.71	54.80	57.79	59.37	65.67	73.54	81.42	82.99
1.077	26	2.607	28	2.807	29.21	33.30	37.24	38.03	41.18	43.54	45.12	49.06	49.84	53.94	56.93	58.50	64.80	72.68	80.55	82.13
1.077	39	3.910	42	4.211	28.34	32.44	36.37	37.16	40.31	42.67	44.25	48.19	48.97	53.07	56.06	57.63	63.93	71.81	79.69	81.26
1.079	38	3.810	41	4.110	26.61	30.70	34.64	35.43	38.58	40.94	42.52	46.46	47.24	51.34	54.33	55.90	62.20	70.08	77.95	79.53
1.080	25	2.506	27	2.707	22.27	26.37	30.30	31.09	34.24	36.61	38.18	42.12	42.91	47.00	49.99	51.57	57.87	65.74	73.62	75.19
1.081	37	3.709	40	4.010	29.37	33.46	37.40	38.19	41.34	43.70	45.27	49.21	50.00	54.09	57.08	58.66	64.96	72.83	80.71	82.28
Length Factor*					1.18	1.22	1.26	1.26	1.29	1.31	1.32	1.35	1.36	1.38	1.40	1.41	1.45	1.49	1.52	1.53

* The length correction factor must be used to determine the proper belt width.

8M HT500 Selection Table

Speed Ratio	Sprocket Combinations				Center Distance, Inches													
	Driver		Driven															
	No. of Teeth	Pitch Dia. Inches	No. of Teeth	Pitch Dia. Inches	640-8MX	720-8MX	800-8MX	896-8MX	960-8MX	1000-8MX	1040-8MX	1120-8MX	1200-8MX	1224-8MX	1280-8MX	1440-8MX	1600-8MX	1760-8MX
Length Factor*					0.79	0.83	0.87	0.91	0.94	0.96	0.97	1.00	1.03	1.03	1.05	1.10	1.14	1.17
1.207	29	2.907	35	3.509	7.55	9.13	10.71	12.60	13.86	14.64	15.43	17.00	18.58	19.05	20.15	23.30	26.45	29.60
1.212	33	3.308	40	4.010	6.84	8.42	10.00	11.89	13.15	13.93	14.72	16.29	17.87	18.34	19.44	22.59	25.75	28.90
1.214	28	2.807	34	3.409	7.71	9.29	10.86	12.75	14.01	14.80	15.59	17.16	18.74	19.21	20.31	23.46	26.61	29.76
1.216	37	3.709	45	4.511	6.13	7.71	9.29	11.18	12.44	13.22	14.01	15.58	17.16	17.63	18.73	21.89	25.04	28.19
1.219	32	3.208	39	3.910	7.00	8.58	10.15	12.04	13.30	14.09	14.88	16.45	18.03	18.50	19.60	22.75	25.90	29.05
1.220	41	4.110	50	5.013	5.42	7.00	8.57	10.47	11.73	12.51	13.30	14.87	16.45	16.92	18.02	21.17	24.33	27.48
1.222	27	2.707	33	3.308	7.87	9.45	11.02	12.91	14.17	14.96	15.74	17.32	18.89	19.37	20.47	23.62	26.77	29.92
1.226	31	3.108	38	3.810	7.16	8.73	10.31	12.20	13.46	14.25	15.03	16.61	18.18	18.66	19.76	22.91	26.06	29.21
1.227	22	2.206	27	2.707	8.74	10.31	11.89	13.78	15.04	15.82	16.61	18.18	19.76	20.23	21.33	24.49	27.64	30.79
1.231	26	2.607	32	3.208	8.03	9.60	11.18	13.07	14.33	15.11	15.90	17.48	19.05	19.53	20.63	23.78	26.93	30.08
1.231	39	3.910	48	4.812	5.73	7.31	8.89	10.78	12.04	12.83	13.61	15.19	16.76	17.24	18.34	21.49	24.64	27.79
1.233	30	3.008	37	3.709	7.32	8.89	10.47	12.36	13.62	14.41	15.19	16.77	18.34	18.82	19.92	23.07	26.22	29.37
1.235	34	3.409	42	4.211	6.60	8.18	9.76	11.65	12.91	13.69	14.48	16.06	17.63	18.11	19.21	22.36	25.51	28.66
1.240	25	2.506	31	3.108	8.19	9.76	11.34	13.23	14.49	15.27	16.06	17.63	19.21	19.68	20.78	23.93	27.08	30.23
1.241	29	2.907	36	3.609	7.47	9.05	10.63	12.52	13.78	14.56	15.35	16.92	18.50	18.97	20.07	23.22	26.38	29.53
1.242	33	3.308	41	4.110	6.76	8.34	9.92	11.81	13.07	13.85	14.64	16.21	17.79	18.26	19.36	22.52	25.67	28.82
1.244	45	4.511	56	5.614		6.20	7.78	9.67	10.93	11.72	12.51	14.08	15.66	16.13	17.23	20.39	23.54	26.69
1.250	28	2.807	35	3.509	7.63	9.21	10.78	12.67	13.94	14.72	15.51	17.08	18.66	19.13	20.23	23.38	26.53	29.68
1.250	32	3.208	40	4.010	6.92	8.50	10.07	11.96	13.22	14.01	14.80	16.37	17.95	18.42	19.52	22.67	25.82	28.97
1.250	36	3.609	45	4.511	6.21	7.78	9.36	11.25	12.51	13.30	14.09	15.66	17.24	17.71	18.81	21.96	25.11	28.26
1.250	40	4.010	50	5.013	5.49	7.07	8.65	10.54	11.80	12.59	13.37	14.95	16.53	17.00	18.10	21.25	24.40	27.55
1.250	48	4.812	60	6.015			7.22	9.12	10.38	11.17	11.95	13.53	15.10	15.58	16.68	19.83	22.98	26.13
1.250	60	6.015	75	7.519					8.24	9.02	9.81	11.39	12.97	13.44	14.55	17.70	20.85	24.00
1.258	31	3.108	39	3.910	7.08	8.65	10.23	12.12	13.38	14.17	14.95	16.53	18.10	18.58	19.68	22.83	25.98	29.13
1.259	27	2.707	34	3.409	7.79	9.36	10.94	12.83	14.09	14.88	15.66	17.24	18.81	19.29	20.39	23.54	26.69	29.84
1.260	50	5.013	63	6.316			6.82	8.72	9.98	10.77	11.55	13.13	14.71	15.18	16.28	19.44	22.59	25.74
1.262	42	4.211	53	5.314		6.67	8.25	10.14	11.41	12.19	12.98	14.55	16.13	16.60	17.71	20.86	24.01	27.16
1.263	38	3.810	48	4.812	5.81	7.39	8.96	10.86	12.12	12.90	13.69	15.27	16.84	17.32	18.42	21.57	24.72	27.87
1.264	53	5.314	67	6.717				8.16	9.42	10.21	11.00	12.58	14.15	14.63	15.73	18.88	22.03	25.19
1.267	30	3.008	38	3.810	7.23	8.81	10.39	12.28	13.54	14.32	15.11	16.69	18.26	18.74	19.84	22.99	26.14	29.29
1.268	56	5.614	71	7.118				7.60	8.87	9.66	10.44	12.02	13.60	14.08	15.18	18.33	21.48	24.63
1.268	71	7.118	90	9.023								9.32	10.90	11.38	12.48	15.64	18.79	21.95
1.269	26	2.607	33	3.308	7.95	9.52	11.10	12.99	14.25	15.04	15.82	17.40	18.97	19.45	20.55	23.70	26.85	30.00
1.270	63	6.316	80	8.020						8.38	9.17	10.75	12.33	12.81	13.91	17.06	20.22	23.37
1.273	22	2.206	28	2.807	8.66	10.23	11.81	13.70	14.96	15.74	16.53	18.11	19.68	20.16	21.26	24.41	27.56	30.71
1.273	33	3.308	42	4.211	6.68	8.26	9.83	11.73	12.99	13.77	14.56	16.13	17.71	18.18	19.28	22.44	25.59	28.74
1.276	29	2.907	37	3.709	7.39	8.97	10.55	12.44	13.70	14.48	15.27	16.84	18.42	18.89	19.99	23.15	26.30	29.45
1.280	25	2.506	32	3.208	8.10	9.68	11.26	13.15	14.41	15.19	15.98	17.55	19.13	19.60	20.70	23.85	27.00	30.16
1.281	32	3.208	41	4.110	6.84	8.42	9.99	11.88	13.14	13.93	14.72	16.29	17.87	18.34	19.44	22.59	25.74	28.89
1.282	39	3.910	50	5.013	5.56	7.15	8.72	10.62	11.88	12.66	13.45	15.03	16.60	17.08	18.18	21.33	24.48	27.63
1.286	28	2.807	36	3.609	7.55	9.13	10.70	12.59	13.86	14.64	15.43	17.00	18.58	19.05	20.15	23.30	26.45	29.60
1.286	35	3.509	45	4.511	6.28	7.86	9.44	11.33	12.59	13.38	14.16	15.74	17.31	17.79	18.89	22.04	25.19	28.34
1.290	31	3.108	40	4.010	6.99	8.57	10.15	12.04	13.30	14.09	14.87	16.45	18.02	18.50	19.60	22.75	25.90	29.05
1.293	41	4.110	53	5.314		6.75	8.33	10.22	11.48	12.27	13.05	14.63	16.21	16.68	17.78	20.93	24.09	27.24
1.296	27	2.707	35	3.509	7.71	9.28	10.86	12.75	14.01	14.80	15.58	17.16	18.73	19.21	20.31	23.46	26.61	29.76
1.297	37	3.709	48	4.812	5.88	7.46	9.04	10.93	12.20	12.98	13.77	15.34	16.92	17.39	18.49	21.65	24.80	27.95
1.300	30	3.008	39	3.910	7.15	8.73	10.31	12.20	13.46	14.24	15.03	16.61	18.18	18.66	19.76	22.91	26.06	29.21
1.308	26	2.607	34	3.409	7.86	9.44	11.02	12.91	14.17	14.95	15.74	17.32	18.89	19.37	20.47	23.62	26.77	29.92
1.310	29	2.907	38	3.810	7.31	8.89	10.46	12.36	13.62	14.40	15.19	16.76	18.34	18.81	19.91	23.07	26.22	29.37
1.313	32	3.208	42	4.211	6.75	8.33	9.91	11.80	13.06	13.85	14.63	16.21	17.79	18.26	19.36	22.51	25.66	28.81
1.313	48	4.812	63	6.316			6.97	8.87	10.13	10.92	11.71	13.28	14.86	15.34	16.44	19.59	22.74	25.89
1.316	38	3.810	50	5.013	5.64	7.22	8.80	10.69	11.96	12.74	13.53	15.10	16.68	17.15	18.26	21.41	24.56	27.71
1.318	22	2.206	29	2.907	8.58	10.15	11.73	13.62	14.88	15.67	16.45	18.03	19.60	20.08	21.18	24.33	27.48	30.63
1.320	25	2.506	33	3.308	8.02	9.60	11.18	13.07	14.33	15.11	15.90	17.47	19.05	19.52	20.62	23.78	26.93	30.08
1.321	28	2.807	37	3.709	7.47	9.05	10.62	12.51	13.77	14.56	15.35	16.92	18.50	18.97	20.07	23.22	26.37	29.52
1.323	31	3.108	41	4.110	6.91	8.49	10.07	11.96	13.22	14.01	14.79	16.37	17.94	18.42	19.52	22.67	25.82	28.97
1.324	34	3.409	45	4.511	6.36	7.94	9.51	11.41	12.67	13.45	14.24	15.82	17.39	17.87	18.97	22.12	25.27	28.42
1.325	40	4.010	53	5.314	5.24	6.82	8.40	10.30	11.56	12.34	13.13	14.71	16.28	16.76	17.86	21.01	24.16	27.31
1.333	27	2.707	36	3.609	7.63	9.20	10.78	12.67	13.93	14.72	15.50	17.08	18.65	19.13	20.23	23.38	26.53	29.68
1.333	30	3.008	40	4.010	7.07	8.65	10.23	12.12	13.38	14.16	14.95	16.53	18.10	18.58	19.68	22.83	25.98	29.13
1.333	36	3.609	48	4.812	5.96	7.54	9.12	11.01	12.27	13.06	13.84	15.42	17.00	17.47	18.57	21.72	24.87	28.02
1.333	42	4.211	56	5.614		6.42	8.00	9.90	11.16	11.95	12.73	14.31	15.89	16.36	17.46	20.62	23.77	26.92
1.333	45	4.511	60	6.015		5.86	7.44	9.34	10.61	11.39	12.18	13.76	15.33	15.81	16.91	20.06	23.22	26.37
1.333	60	6.015	80	8.020					7.81	8.60	9.39	10.98	12.56	13.03	14.14	17.29	20.45	23.60
1.339	56	5.614	75	7.519				7.26	8.53	9.32	10.11	11.69	13.27	13.75	14.85	18.01	21.16	24.31
1.340	50	5.013	67	6.717			6.48	8.38	9.65	10.44	11.22	12.80	14.38	14.86	15.96	19.11	22.27	25.42
1.340	53	5.314	71	7.118				7.82	9.09	9.88	10.67	12.25	13.83	14.30	15.40	18.56	21.71	24.86
1.343	67	6.717	90	9.023								9.61	11.20	11.68	12.78	15.94	19.10	22.25
1.345	29	2.907	39	3.910	7.23	8.81	10.38	12.28	13.54	14.32	15.11	16.68	18.26	18.73	19.83	22.99	26.14	29.29
1.346	26	2.607	35	3.509	7.78	9.36	10.94	12.83	14.09	14.87	15.66	17.24	18.81	19.29	20.39	23.54	26.69	29.84
1.351	37	3.709	50	5.013	5.71	7.30	8.88	10.77	12.03	12.82	13.60	15.18	16.76	17.23	18.33	21.48	24.64	27.79
1.355	31	3.108	42	4.211	6.83	8.41	9.99	11.88	13.14	13.93	14.71	16.29	17.86	18.34	19.44	22.59	25.74	28.89
1.357	28	2.807	38	3.810	7.39	8.96	10.54	12.43	13.69	14.48	15.26	16.84	18.42	18.89	19.99	23.14	26.29	29.44
1.359	39	3.910	53	5.314	5.31	6.89	8.48	10.37	11.63	12.42	13.21	14.78	16.36	16.84	17.94	21.09	24.24	27.39
1.360	25	2.506	34	3.409	7.94	9.52	11.10	12.99	14.25	15.03	15.82	17.39	18.97	19.44	20.54	23.70	26.85	30.00
1.364	22	2.206	30	3.008	8.50	10.07	11.65	13.54	14.80	15.58	16.37	17.95	19.52	20.00	21.10	24.25	27.40	30.55
1.364	33	3.308	45	4.511	6.43	8.01	9.59	11.48	12.74	13.53	14.32	15.89	17.47	17.94	19.04	22.20	25.35	28.50
Length Factor*					0.79	0.83	0.87	0.91	0.94	0.96	0.97	1.00	1.03	1.03	1.05	1.10	1.14	1.17

* The length correction factor must be used to determine the proper belt width.

SELECTION

8M HT500 Selection Table (Continued)

Speed Ratio	Sprocket Combinations: Driver No. of Teeth	Driver Pitch Dia. Inches	Driven No. of Teeth	Driven Pitch Dia. Inches	Center Distance, Inches: 1792-8MX	2000-8MX	2200-8MX	2240-8MX	2400-8MX	2520-8MX	2600-8MX	2800-8MX	2840-8MX	3048-8MX	3200-8MX	3280-8MX	3600-8MX	4000-8MX	4400-8MX	4480-8MX
Length Factor*					1.18	1.22	1.26	1.26	1.29	1.31	1.32	1.35	1.36	1.38	1.40	1.41	1.45	1.49	1.52	1.53
1.207	29	2.907	35	3.509	30.23	34.33	38.26	39.05	42.20	44.56	46.14	50.08	50.86	54.96	57.95	59.53	65.83	73.70	81.58	83.15
1.212	33	3.308	40	4.010	29.53	33.62	37.56	38.35	41.50	43.86	45.43	49.37	50.16	54.25	57.24	58.82	65.12	72.99	80.87	82.44
1.214	28	2.807	34	3.409	30.39	34.49	38.42	39.21	42.36	44.72	46.30	50.24	51.02	55.12	58.11	59.68	65.98	73.86	81.73	83.31
1.216	37	3.709	45	4.511	28.82	32.91	36.85	37.64	40.79	43.15	44.72	48.66	49.45	53.54	56.53	58.11	64.41	72.28	80.16	81.73
1.219	32	3.208	39	3.910	29.68	33.78	37.71	38.50	41.65	44.01	45.59	49.53	50.31	54.41	57.40	58.97	65.27	73.15	81.02	82.60
1.220	41	4.110	50	5.013	28.11	32.20	36.14	36.93	40.08	42.44	44.01	47.95	48.74	52.83	55.82	57.40	63.70	71.57	79.45	81.02
1.222	27	2.707	33	3.308	30.55	34.64	38.58	39.37	42.52	44.88	46.45	50.39	51.18	55.28	58.27	59.84	66.14	74.02	81.89	83.47
1.226	31	3.108	38	3.810	29.84	33.93	37.87	38.66	41.81	44.17	45.75	49.69	50.47	54.57	57.56	59.13	65.43	73.31	81.18	82.76
1.227	22	2.206	27	2.707	31.42	35.51	39.45	40.24	43.39	45.75	47.32	51.26	52.05	56.14	59.13	60.71	67.01	74.88	82.76	84.33
1.231	26	2.607	32	3.208	30.71	34.80	38.74	39.53	42.68	45.04	46.61	50.55	51.34	55.43	58.42	60.00	66.30	74.17	82.05	83.62
1.231	39	3.910	48	4.812	28.42	32.52	36.45	37.24	40.39	42.75	44.33	48.27	49.05	53.15	56.14	57.71	64.01	71.89	79.76	81.34
1.233	30	3.008	37	3.709	30.00	34.09	38.03	38.82	41.97	44.33	45.90	49.84	50.63	54.72	57.71	59.29	65.59	73.46	81.34	82.91
1.235	34	3.409	42	4.211	29.29	33.38	37.32	38.11	41.26	43.62	45.19	49.13	49.92	54.01	57.00	58.58	64.88	72.75	80.63	82.20
1.240	25	2.506	31	3.108	30.86	34.96	38.89	39.68	42.83	45.19	46.77	50.71	51.49	55.59	58.58	60.16	66.46	74.33	82.21	83.78
1.241	29	2.907	36	3.609	30.16	34.25	38.19	38.98	42.13	44.49	46.06	50.00	50.79	54.88	57.87	59.45	65.75	73.62	81.50	83.07
1.242	33	3.308	41	4.110	29.45	33.54	37.48	38.27	41.42	43.78	45.35	49.29	50.08	54.17	57.16	58.74	65.04	72.91	80.79	82.36
1.244	45	4.511	56	5.614	27.32	31.41	35.35	36.14	39.29	41.65	43.22	47.16	47.95	52.04	55.04	56.61	62.91	70.79	78.66	80.24
1.250	28	2.807	35	3.509	30.31	34.41	38.34	39.13	42.28	44.64	46.22	50.16	50.94	55.04	58.03	59.60	65.90	73.78	81.65	83.23
1.250	32	3.208	40	4.010	29.60	33.70	37.63	38.42	41.57	43.93	45.51	49.45	50.23	54.33	57.32	58.89	65.19	73.07	80.95	82.52
1.250	36	3.609	45	4.511	28.89	32.99	36.92	37.71	40.87	43.23	44.80	48.74	49.53	53.62	56.61	58.19	64.49	72.36	80.24	81.81
1.250	40	4.010	50	5.013	28.18	32.28	36.21	37.00	40.16	42.52	44.09	48.03	48.82	52.91	55.90	57.48	63.78	71.65	79.53	81.10
1.250	48	4.812	60	6.015	26.76	30.86	34.80	35.59	38.74	41.10	42.67	46.61	47.40	51.49	54.48	56.06	62.36	70.23	78.11	79.68
1.250	60	6.015	75	7.519	24.63	28.73	32.67	33.46	36.61	38.97	40.54	44.48	45.27	49.36	52.36	53.93	60.23	68.11	75.98	77.56
1.258	31	3.108	39	3.910	29.76	33.86	37.79	38.58	41.73	44.09	45.67	49.61	50.39	54.49	57.48	59.05	65.35	73.23	81.10	82.68
1.259	27	2.707	34	3.409	30.47	34.56	38.50	39.29	42.44	44.80	46.38	50.32	51.10	55.20	58.19	59.76	66.06	73.94	81.81	83.39
1.260	50	5.013	63	6.316	26.37	30.47	34.40	35.19	38.34	40.70	42.28	46.22	47.00	51.10	54.09	55.66	61.96	69.84	77.71	79.29
1.262	42	4.211	53	5.314	27.79	31.88	35.82	36.61	39.76	42.12	43.70	47.64	48.42	52.52	55.51	57.08	63.38	71.26	79.13	80.71
1.263	38	3.810	48	4.812	28.50	32.59	36.53	37.32	40.47	42.83	44.41	48.35	49.13	53.23	56.22	57.79	64.09	71.97	79.84	81.42
1.264	53	5.314	67	6.717	25.82	29.91	33.85	34.64	37.79	40.15	41.72	45.67	46.45	50.55	53.54	55.11	61.41	69.29	77.16	78.74
1.267	30	3.008	38	3.810	29.92	34.01	37.95	38.74	41.89	44.25	45.82	49.76	50.55	54.64	57.63	59.21	65.51	73.38	81.26	82.83
1.268	56	5.614	71	7.118	25.26	29.36	33.30	34.09	37.24	39.60	41.17	45.11	45.90	49.99	52.98	54.56	60.86	68.74	76.61	78.19
1.268	71	7.118	90	9.023	22.58	26.68	30.61	31.40	34.55	36.92	38.49	42.43	43.22	47.31	50.30	51.88	58.18	66.06	73.93	75.51
1.269	26	2.607	33	3.308	30.63	34.72	38.66	39.45	42.60	44.96	46.53	50.47	51.26	55.35	58.34	59.92	66.22	74.09	81.97	83.54
1.270	63	6.316	80	8.020	24.00	28.10	32.03	32.82	35.98	38.34	39.91	43.85	44.64	48.73	51.72	53.30	59.60	67.48	75.35	76.93
1.273	22	2.206	28	2.807	31.34	35.43	39.37	40.16	43.31	45.67	47.24	51.18	51.97	56.06	59.05	60.63	66.93	74.80	82.68	84.25
1.273	33	3.308	42	4.211	29.37	33.46	37.40	38.19	41.34	43.70	45.27	49.21	50.00	54.09	57.08	58.66	64.96	72.83	80.71	82.28
1.276	29	2.907	37	3.709	30.08	34.17	38.11	38.90	42.05	44.41	45.98	49.92	50.71	54.80	57.79	59.37	65.67	73.54	81.42	82.99
1.280	25	2.506	32	3.208	30.79	34.88	38.82	39.61	42.76	45.12	46.69	50.63	51.42	55.51	58.50	60.08	66.38	74.25	82.13	83.70
1.281	32	3.208	41	4.110	29.52	33.62	37.55	38.34	41.50	43.86	45.43	49.37	50.16	54.25	57.24	58.82	65.12	72.99	80.87	82.44
1.282	39	3.910	50	5.013	28.26	32.36	36.29	37.08	40.23	42.59	44.17	48.11	48.89	52.99	55.98	57.55	63.85	71.73	79.60	81.18
1.286	28	2.807	36	3.609	30.23	34.33	38.26	39.05	42.20	44.56	46.14	50.08	50.86	54.96	57.95	59.52	65.82	73.70	81.57	83.15
1.286	35	3.509	45	4.511	28.97	33.07	37.00	37.79	40.94	43.30	44.88	48.82	49.60	53.70	56.69	58.26	64.56	72.44	80.31	81.89
1.290	31	3.108	40	4.010	29.68	33.78	37.71	38.50	41.65	44.01	45.59	49.53	50.31	54.41	57.40	58.97	65.27	73.15	81.02	82.60
1.293	41	4.110	53	5.314	27.87	31.96	35.90	36.69	39.84	42.20	43.77	47.71	48.50	52.59	55.59	57.16	63.46	71.34	79.21	80.79
1.296	27	2.707	35	3.509	30.39	34.49	38.42	39.21	42.36	44.72	46.30	50.24	51.02	55.12	58.11	59.68	65.98	73.86	81.73	83.31
1.297	37	3.709	48	4.812	28.58	32.67	36.61	37.40	40.55	42.91	44.48	48.42	49.21	53.30	56.29	57.87	64.17	72.05	79.92	81.50
1.300	30	3.008	39	3.910	29.84	33.93	37.87	38.66	41.81	44.17	45.74	49.68	50.47	54.56	57.55	59.13	65.43	73.31	81.18	82.76
1.308	26	2.607	34	3.409	30.55	34.64	38.58	39.37	42.52	44.88	46.45	50.39	51.18	55.27	58.26	59.84	66.14	74.01	81.89	83.46
1.310	29	2.907	38	3.810	30.00	34.09	38.03	38.82	41.97	44.33	45.90	49.84	50.63	54.72	57.71	59.29	65.59	73.46	81.34	82.91
1.313	32	3.208	42	4.211	29.44	33.54	37.47	38.26	41.42	43.78	45.35	49.29	50.08	54.17	57.16	58.74	65.04	72.91	80.79	82.36
1.313	48	4.812	63	6.316	26.52	30.62	34.56	35.35	38.50	40.86	42.43	46.37	47.16	51.25	54.24	55.82	62.12	70.00	77.87	79.45
1.316	38	3.810	50	5.013	28.34	32.43	36.37	37.16	40.31	42.67	44.25	48.19	48.97	53.07	56.06	57.63	63.93	71.81	79.68	81.26
1.318	22	2.206	29	2.907	31.26	35.35	39.29	40.08	43.23	45.59	47.16	51.10	51.89	55.98	58.97	60.55	66.85	74.72	82.60	84.17
1.320	25	2.506	33	3.308	30.71	34.80	38.74	39.53	42.68	45.04	46.61	50.55	51.34	55.43	58.42	60.00	66.30	74.17	82.05	83.62
1.321	28	2.807	37	3.709	30.15	34.25	38.18	38.97	42.12	44.49	46.06	50.00	50.79	54.88	57.87	59.45	65.75	73.62	81.50	83.07
1.323	31	3.108	41	4.110	29.60	33.70	37.63	38.42	41.57	43.93	45.51	49.45	50.23	54.33	57.32	58.89	65.19	73.07	80.94	82.52
1.324	34	3.409	45	4.511	29.05	33.15	37.08	37.87	41.02	43.38	44.96	48.90	49.68	53.78	56.77	58.34	64.64	72.52	80.39	81.97
1.325	40	4.010	53	5.314	27.94	32.04	35.98	36.77	39.92	42.28	43.85	47.79	48.58	52.67	55.66	57.24	63.54	71.41	79.29	80.86
1.333	27	2.707	36	3.609	30.31	34.41	38.34	39.13	42.28	44.64	46.22	50.16	50.94	55.04	58.03	59.60	65.90	73.78	81.65	83.23
1.333	30	3.008	40	4.010	29.76	33.85	37.79	38.58	41.73	44.09	45.67	49.61	50.39	54.49	57.48	59.05	65.35	73.23	81.10	82.68
1.333	36	3.609	48	4.812	28.65	32.75	36.69	37.48	40.63	42.99	44.56	48.50	49.29	53.38	56.37	57.95	64.25	72.12	80.00	81.57
1.333	42	4.211	56	5.614	27.55	31.65	35.58	36.37	39.52	41.88	43.46	47.40	48.18	52.28	55.27	56.84	63.14	71.02	78.90	80.47
1.333	45	4.511	60	6.015	27.00	31.09	35.03	35.82	38.97	41.33	42.91	46.85	47.63	51.73	54.72	56.29	62.59	70.47	78.34	79.92
1.333	60	6.015	80	8.020	24.23	28.33	32.27	33.06	36.21	38.57	40.14	44.09	44.87	48.97	51.96	53.53	59.83	67.71	75.59	77.16
1.339	56	5.614	75	7.519	24.94	29.04	32.98	33.77	36.92	39.28	40.85	44.80	45.58	49.68	52.67	54.24	60.54	68.42	76.29	77.87
1.340	50	5.013	67	6.717	26.05	30.15	34.08	34.87	38.02	40.38	41.96	45.90	46.68	50.78	53.77	55.35	61.65	69.52	77.40	78.97
1.340	53	5.314	71	7.118	25.49	29.59	33.53	34.32	37.47	39.83	41.41	45.35	46.13	50.23	53.22	54.79	61.09	68.97	76.85	78.42
1.343	67	6.717	90	9.023	22.88	26.98	30.92	31.71	34.86	37.22	38.80	42.74	43.53	47.62	50.61	52.19	58.49	66.37	74.24	75.82
1.345	29	2.907	39	3.910	29.92	34.01	37.95	38.74	41.89	44.25	45.82	49.76	50.55	54.64	57.63	59.21	65.51	73.38	81.26	82.83
1.346	26	2.607	35	3.509	30.47	34.56	38.50	39.29	42.44	44.80	46.37	50.31	51.10	55.19	58.18	59.76	66.06	73.94	81.81	83.39
1.351	37	3.709	50	5.013	28.42	32.51	36.45	37.24	40.39	42.75	44.32	48.27	49.05	53.15	56.14	57.71	64.01	71.89	79.76	81.34
1.355	31	3.108	42	4.211	29.52	33.62	37.55	38.34	41.49	43.85	45.43	49.37	50.15	54.25	57.24	58.81	65.11	72.99	80.86	82.44
1.357	28	2.807	38	3.810	30.07	34.17	38.10	38.89	42.05	44.41	45.98	49.92	50.71	54.80	57.79	59.37	65.67	73.54	81.42	82.99
1.359	39	3.910	53	5.314	28.02	32.12	36.05	36.84	39.99	42.35	43.93	47.87	48.66	52.75	55.74	57.32	63.62	71.49	79.37	80.94
1.360	25	2.506	34	3.409	30.63	34.72	38.66	39.45	42.60	44.96	46.53	50.47	51.26	55.35	58.34	59.92	66.22	74.09	81.97	83.54
1.364	22	2.206	30	3.008	31.18	35.27	39.21	40.00	43.15	45.51	47.08	51.02	51.81	55.90	58.89	60.47	66.77	74.64	82.52	84.09
1.364	33	3.308	45	4.511	29.13	33.22	37.16	37.95	41.10	43.46	45.03	48.98	49.76	53.86	56.85	58.42	64.72	72.60	80.47	82.05
Length Factor*					1.18	1.22	1.26	1.26	1.29	1.31	1.32	1.35	1.36	1.38	1.40	1.41	1.45	1.49	1.52	1.53

Center distance is greater than eight times the small sprocket and the large sprocket is not flanged. See Engineering Section for details.
* The length correction factor must be used to determine the proper belt width.

8M HT500 Selection Table

Speed Ratio	Sprocket Combinations: Driver No. of Teeth	Driver Pitch Dia. Inches	Driven No. of Teeth	Driven Pitch Dia. Inches	Center Distance, Inches: 640-8MX	720-8MX	800-8MX	896-8MX	960-8MX	1000-8MX	1040-8MX	1120-8MX	1200-8MX	1224-8MX	1280-8MX	1440-8MX	1600-8MX	1760-8MX
Length Factor*					0.79	0.83	0.87	0.91	0.94	0.96	0.97	1.00	1.03	1.03	1.05	1.10	1.14	1.17
1.366	41	4.110	56	5.614		6.49	8.08	9.97	11.24	12.02	12.81	14.39	15.97	16.44	17.54	20.69	23.85	27.00
1.367	30	3.008	41	4.110	6.99	8.57	10.14	12.04	13.30	14.08	14.87	16.45	18.02	18.50	19.60	22.75	25.90	29.05
1.370	27	2.707	37	3.709	7.54	9.12	10.70	12.59	13.85	14.64	15.42	17.00	18.57	19.05	20.15	23.30	26.45	29.60
1.371	35	3.509	48	4.812	6.03	7.61	9.19	11.09	12.35	13.13	13.92	15.50	17.07	17.55	18.65	21.80	24.95	28.10
1.379	29	2.907	40	4.010	7.15	8.72	10.30	12.19	13.46	14.24	15.03	16.60	18.18	18.65	19.75	22.91	26.06	29.21
1.385	26	2.607	36	3.609	7.70	9.28	10.86	12.75	14.01	14.79	15.58	17.16	18.73	19.21	20.31	23.46	26.61	29.76
1.389	36	3.609	50	5.013	5.79	7.37	8.95	10.85	12.11	12.89	13.68	15.26	16.83	17.31	18.41	21.56	24.71	27.86
1.393	28	2.807	39	3.910	7.30	8.88	10.46	12.35	13.61	14.40	15.18	16.76	18.34	18.81	19.91	23.06	26.21	29.36
1.395	38	3.810	53	5.314	5.38	6.97	8.55	10.45	11.71	12.50	13.28	14.86	16.44	16.91	18.01	21.17	24.32	27.47
1.396	48	4.812	67	6.717			6.63	8.53	9.80	10.59	11.38	12.96	14.53	15.01	16.11	19.27	22.42	25.57
1.400	25	2.506	35	3.509	7.86	9.44	11.01	12.91	14.17	14.95	15.74	17.31	18.89	19.36	20.46	23.62	26.77	29.92
1.400	30	3.008	42	4.211	6.90	8.48	10.06	11.96	13.22	14.00	14.79	16.36	17.94	18.42	19.52	22.67	25.82	28.97
1.400	40	4.010	56	5.614		6.57	8.15	10.05	11.31	12.10	12.89	14.46	16.04	16.52	17.62	20.77	23.92	27.07
1.400	45	4.511	63	6.316			7.19	9.09	10.36	11.14	11.93	13.51	15.09	15.57	16.67	19.82	22.97	26.13
1.400	80	8.020	112	11.229											9.95	13.13	16.30	19.46
1.406	32	3.208	45	4.511	6.50	8.09	9.67	11.56	12.82	13.61	14.39	15.97	17.55	18.02	19.12	22.27	25.42	28.58
1.407	27	2.707	38	3.810	7.46	9.04	10.62	12.51	13.77	14.56	15.34	16.92	18.49	18.97	20.07	23.22	26.37	29.52
1.409	22	2.206	31	3.108	8.41	9.99	11.57	13.46	14.72	15.50	16.29	17.87	19.44	19.92	21.02	24.17	27.32	30.47
1.412	34	3.409	48	4.812	6.10	7.69	9.27	11.16	12.42	13.21	14.00	15.57	17.15	17.62	18.73	21.88	25.03	28.18
1.414	29	2.907	41	4.110	7.06	8.64	10.22	12.11	13.38	14.16	14.95	16.52	18.10	18.57	19.67	22.83	25.98	29.13
1.415	53	5.314	75	7.519				7.48	8.75	9.54	10.33	11.91	13.50	13.97	15.08	18.23	21.39	24.54
1.420	50	5.013	71	7.118				8.04	9.31	10.10	10.89	12.47	14.05	14.53	15.63	18.79	21.94	25.10
1.423	26	2.607	37	3.709	7.62	9.20	10.78	12.67	13.93	14.71	15.50	17.08	18.65	19.13	20.23	23.38	26.53	29.68
1.429	28	2.807	40	4.010	7.22	8.80	10.38	12.27	13.53	14.32	15.10	16.68	18.26	18.73	19.83	22.98	26.13	29.28
1.429	35	3.509	50	5.013	5.86	7.44	9.03	10.92	12.18	12.97	13.76	15.33	16.91	17.39	18.49	21.64	24.79	27.94
1.429	42	4.211	60	6.015		6.08	7.67	9.57	10.83	11.62	12.41	13.98	15.56	16.04	17.14	20.29	23.45	26.60
1.429	56	5.614	80	8.020					8.10	8.90	9.69	11.27	12.86	13.33	14.44	17.60	20.75	23.91
1.429	63	6.316	90	9.023							8.31	9.91	11.49	11.97	13.08	16.24	19.40	22.56
1.432	37	3.709	53	5.314	5.45	7.04	8.63	10.52	11.79	12.57	13.36	14.94	16.51	16.99	18.09	21.24	24.40	27.55
1.436	39	3.910	56	5.614		6.64	8.23	10.12	11.39	12.18	12.96	14.54	16.12	16.59	17.69	20.85	24.00	27.15
1.440	25	2.506	36	3.609	7.78	9.36	10.93	12.83	14.09	14.87	15.66	17.23	18.81	19.28	20.38	23.54	26.69	29.84
1.444	27	2.707	39	3.910	7.38	8.96	10.54	12.43	13.69	14.48	15.26	16.84	18.41	18.89	19.99	23.14	26.29	29.44
1.448	29	2.907	42	4.211	6.98	8.56	10.14	12.03	13.29	14.08	14.87	16.44	18.02	18.49	19.59	22.75	25.90	29.05
1.452	31	3.108	45	4.511	6.58	8.16	9.74	11.63	12.90	13.68	14.47	16.05	17.62	18.10	19.20	22.35	25.50	28.65
1.455	22	2.206	32	3.208	8.33	9.91	11.49	13.38	14.64	15.42	16.21	17.79	19.36	19.84	20.94	24.09	27.24	30.39
1.455	33	3.308	48	4.812	6.18	7.76	9.34	11.24	12.50	13.29	14.07	15.65	17.23	17.70	18.80	21.95	25.11	28.26
1.462	26	2.607	38	3.810	7.54	9.12	10.69	12.59	13.85	14.63	15.42	16.99	18.57	19.05	20.15	23.30	26.45	29.60
1.463	41	4.110	60	6.015		6.15	7.74	9.64	10.91	11.69	12.48	14.06	15.64	16.11	17.22	20.37	23.52	26.68
1.464	28	2.807	41	4.110	7.14	8.72	10.30	12.19	13.45	14.24	15.02	16.60	18.18	18.65	19.75	22.90	26.05	29.21
1.471	34	3.409	50	5.013	5.93	7.52	9.10	11.00	12.26	13.05	13.83	15.41	16.99	17.46	18.56	21.72	24.87	28.02
1.472	36	3.609	53	5.314	5.53	7.12	8.70	10.60	11.86	12.65	13.43	15.01	16.59	17.07	18.17	21.32	24.47	27.62
1.474	38	3.810	56	5.614		6.71	8.30	10.20	11.46	12.25	13.04	14.62	16.19	16.67	17.77	20.92	24.08	27.23
1.479	48	4.812	71	7.118				8.19	9.46	10.25	11.04	12.62	14.20	14.68	15.78	18.94	22.10	25.25
1.480	25	2.506	37	3.709	7.70	9.27	10.85	12.74	14.01	14.79	15.58	17.15	18.73	19.20	20.30	23.46	26.61	29.76
1.481	27	2.707	40	4.010	7.30	8.88	10.45	12.35	13.61	14.39	15.18	16.76	18.33	18.81	19.91	23.06	26.21	29.36
1.489	45	4.511	67	6.717			6.84	8.75	10.02	10.81	11.60	13.18	14.76	15.24	16.34	19.50	22.65	25.80
1.493	75	7.519	112	11.229											10.30	13.49	16.67	19.83
1.500	22	2.206	33	3.308	8.25	9.83	11.41	13.30	14.56	15.34	16.13	17.71	19.28	19.76	20.86	24.01	27.16	30.31
1.500	26	2.607	39	3.910	7.45	9.03	10.61	12.50	13.77	14.55	15.34	16.91	18.49	18.97	20.07	23.22	26.37	29.52
1.500	28	2.807	42	4.211	7.05	8.63	10.21	12.11	13.37	14.16	14.94	16.52	18.09	18.57	19.67	22.82	25.97	29.12
1.500	30	3.008	45	4.511	6.65	8.24	9.82	11.71	12.97	13.76	14.55	16.12	17.70	18.17	19.27	22.43	25.58	28.73
1.500	32	3.208	48	4.812	6.25	7.84	9.42	11.31	12.58	13.36	14.15	15.73	17.30	17.78	18.88	22.03	25.18	28.33
1.500	40	4.010	60	6.015		6.22	7.81	9.71	10.98	11.77	12.56	14.14	15.71	16.19	17.29	20.45	23.60	26.75
1.500	42	4.211	63	6.316		5.81	7.41	9.31	10.58	11.37	12.16	13.74	15.32	15.79	16.89	20.05	23.20	26.36
1.500	50	5.013	75	7.519				7.70	8.97	9.76	10.55	12.14	13.72	14.20	15.30	18.46	21.62	24.77
1.500	60	6.015	90	9.023							8.53	10.12	11.71	12.19	13.30	16.47	19.63	22.78
1.509	53	5.314	80	8.020					8.32	9.11	9.90	11.49	13.08	13.55	14.66	17.82	20.98	24.13
1.514	35	3.509	53	5.314	5.60	7.19	8.77	10.67	11.94	12.72	13.51	15.09	16.67	17.14	18.24	21.40	24.55	27.70
1.514	37	3.709	56	5.614	5.19	6.79	8.37	10.27	11.54	12.33	13.11	14.69	16.27	16.75	17.85	21.00	24.15	27.31
1.515	33	3.308	50	5.013	6.00	7.59	9.18	11.07	12.34	13.12	13.91	15.49	17.06	17.54	18.64	21.79	24.95	28.10
1.519	27	2.707	41	4.110	7.21	8.79	10.37	12.27	13.53	14.31	15.10	16.68	18.25	18.73	19.83	22.98	26.13	29.28
1.520	25	2.506	38	3.810	7.61	9.19	10.77	12.66	13.92	14.71	15.50	17.07	18.65	19.12	20.22	23.38	26.53	29.68
1.537	41	4.110	63	6.316		5.88	7.48	9.39	10.65	11.44	12.23	13.81	15.39	15.87	16.97	20.13	23.28	26.43
1.538	26	2.607	40	4.010	7.37	8.95	10.53	12.42	13.69	14.47	15.26	16.83	18.41	18.88	19.99	23.14	26.29	29.44
1.538	39	3.910	60	6.015		6.29	7.88	9.79	11.05	11.84	12.63	14.21	15.79	16.27	17.37	20.52	23.68	26.83
1.545	22	2.206	34	3.409	8.17	9.75	11.32	13.22	14.48	15.26	16.05	17.62	19.20	19.68	20.78	23.93	27.08	30.23
1.548	31	3.108	48	4.812	6.32	7.91	9.49	11.39	12.65	13.44	14.22	15.80	17.38	17.85	18.96	22.11	25.26	28.41
1.552	29	2.907	45	4.511	6.73	8.31	9.89	11.79	13.05	13.84	14.62	16.20	17.78	18.25	19.35	22.50	25.66	28.81
1.556	27	2.707	42	4.211	7.13	8.71	10.29	12.18	13.45	14.23	15.02	16.59	18.17	18.65	19.75	22.90	26.05	29.20
1.556	36	3.609	56	5.614	5.26	6.86	8.45	10.35	11.61	12.40	13.19	14.77	16.35	16.82	17.92	21.08	24.23	27.38
1.559	34	3.409	53	5.314	5.67	7.26	8.85	10.75	12.01	12.80	13.59	15.16	16.74	17.22	18.32	21.47	24.63	27.78
1.560	25	2.506	39	3.910	7.53	9.11	10.69	12.58	13.84	14.63	15.41	16.99	18.57	19.04	20.14	23.30	26.45	29.60
1.563	32	3.208	50	5.013	6.08	7.67	9.25	11.15	12.41	13.20	13.98	15.56	17.14	17.62	18.72	21.87	25.02	28.17
1.563	48	4.812	75	7.519				7.84	9.11	9.91	10.70	12.29	13.87	14.35	15.45	18.61	21.77	24.92
1.575	40	4.010	63	6.316		5.95	7.55	9.46	10.73	11.52	12.31	13.89	15.47	15.94	17.05	20.20	23.36	26.51
1.577	26	2.607	41	4.110	7.29	8.87	10.45	12.34	13.60	14.39	15.18	16.75	18.33	18.80	19.91	23.06	26.21	29.36
1.577	71	7.118	112	11.229										9.46	10.59	13.78	16.96	20.13
Length Factor*					0.79	0.83	0.87	0.91	0.94	0.96	0.97	1.00	1.03	1.03	1.05	1.10	1.14	1.17

* The length correction factor must be used to determine the proper belt width.

SELECTION

8M HT500 Selection Table (Continued)

Speed Ratio	Sprocket Combinations: Driver No. of Teeth	Driver Pitch Dia. Inches	Driven No. of Teeth	Driven Pitch Dia. Inches	Center Distance, Inches: 1792-8MX	2000-8MX	2200-8MX	2240-8MX	2400-8MX	2520-8MX	2600-8MX	2800-8MX	2840-8MX	3048-8MX	3200-8MX	3280-8MX	3600-8MX	4000-8MX	4400-8MX	4480-8MX
Length Factor*					1.18	1.22	1.26	1.26	1.29	1.31	1.32	1.35	1.36	1.38	1.40	1.41	1.45	1.49	1.52	1.53
1.366	41	4.110	56	5.614	27.63	31.72	35.66	36.45	39.60	41.96	43.54	47.48	48.26	52.20	55.35	56.92	63.22	71.10	78.97	80.55
1.367	30	3.008	41	4.110	29.68	33.78	37.71	38.50	41.65	44.01	45.59	49.53	50.31	54.25	57.40	58.97	65.27	73.15	81.02	82.60
1.370	27	2.707	37	3.709	30.23	34.33	38.26	39.05	42.20	44.56	46.14	50.08	50.86	54.80	57.95	59.52	65.82	73.70	81.57	83.15
1.371	35	3.509	48	4.812	28.73	32.83	36.76	37.55	40.70	43.06	44.64	48.58	49.37	53.30	56.45	58.03	64.33	72.20	80.08	81.65
1.379	29	2.907	40	4.010	29.84	33.93	37.87	38.66	41.81	44.17	45.74	49.68	50.47	54.40	57.55	59.13	65.43	73.31	81.18	82.76
1.385	26	2.607	36	3.609	30.39	34.48	38.42	39.21	42.36	44.72	46.30	50.24	51.02	54.96	58.11	59.68	65.98	73.86	81.73	83.31
1.389	36	3.609	50	5.013	28.49	32.59	36.53	37.32	40.47	42.83	44.40	48.34	49.13	53.06	56.21	57.79	64.09	71.96	79.84	81.42
1.393	28	2.807	39	3.910	29.99	34.09	38.03	38.82	41.97	44.33	45.90	49.84	50.63	54.56	57.71	59.29	65.59	73.46	81.34	82.91
1.395	38	3.810	53	5.314	28.10	32.20	36.13	36.92	40.07	42.43	44.01	47.95	48.73	52.67	55.82	57.39	63.69	71.57	79.45	81.02
1.396	48	4.812	67	6.717	26.20	30.30	34.24	35.03	38.18	40.54	42.11	46.06	46.84	50.78	53.93	55.50	61.80	69.68	77.55	79.13
1.400	25	2.506	35	3.509	30.55	34.64	38.58	39.37	42.52	44.88	46.45	50.39	51.18	55.11	58.26	59.84	66.14	74.01	81.89	83.46
1.400	30	3.008	42	4.211	29.60	33.69	37.63	38.42	41.57	43.93	45.51	49.45	50.23	54.17	57.32	58.89	65.19	73.07	80.94	82.52
1.400	40	4.010	56	5.614	27.70	31.80	35.74	36.53	39.68	42.04	43.61	47.55	48.34	52.28	55.43	57.00	63.30	71.18	79.05	80.63
1.400	45	4.511	63	6.316	26.76	30.85	34.79	35.58	38.73	41.09	42.67	46.61	47.39	51.33	54.48	56.05	62.35	70.23	78.11	79.68
1.400	80	8.020	112	11.229	20.09	24.20	28.14	28.93	32.09	34.45	36.03	39.97	40.76	44.69	47.84	49.42	55.72	63.60	71.48	73.05
1.406	32	3.208	45	4.511	29.21	33.30	37.24	38.03	41.18	43.54	45.11	49.05	49.84	53.77	56.92	58.50	64.80	72.67	80.55	82.12
1.407	27	2.707	38	3.810	30.15	34.25	38.18	38.97	42.12	44.48	46.06	50.00	50.78	54.72	57.87	59.44	65.74	73.62	81.49	83.07
1.409	22	2.206	31	3.108	31.10	35.19	39.13	39.92	43.07	45.43	47.00	50.94	51.73	55.66	58.81	60.39	66.69	74.57	82.44	84.02
1.412	34	3.409	48	4.812	28.81	32.91	36.84	37.63	40.78	43.14	44.72	48.66	49.44	53.38	56.53	58.10	64.40	72.28	80.16	81.73
1.414	29	2.907	41	4.110	29.76	33.85	37.79	38.58	41.73	44.09	45.66	49.61	50.39	54.33	57.48	59.05	65.35	73.23	81.10	82.68
1.415	53	5.314	75	7.519	25.17	29.27	33.21	34.00	37.15	39.51	41.09	45.03	45.81	49.75	52.90	54.47	60.78	68.65	76.53	78.10
1.420	50	5.013	71	7.118	25.73	29.82	33.76	34.55	37.70	40.06	41.64	45.58	46.37	50.30	53.45	55.03	61.33	69.20	77.08	78.66
1.423	26	2.607	37	3.709	30.31	34.41	38.34	39.13	42.28	44.64	46.22	50.16	50.94	54.88	58.03	59.60	65.90	73.78	81.65	83.23
1.429	28	2.807	40	4.010	29.91	34.01	37.95	38.74	41.89	44.25	45.82	49.76	50.55	54.48	57.63	59.21	65.51	73.38	81.26	82.83
1.429	35	3.509	50	5.013	28.57	32.67	36.60	37.39	40.54	42.91	44.48	48.42	49.21	53.14	56.29	57.87	64.17	72.04	79.92	81.49
1.429	42	4.211	60	6.015	27.23	31.33	35.26	36.05	39.20	41.56	43.14	47.08	47.87	51.80	54.95	56.53	62.83	70.70	78.58	80.15
1.429	56	5.614	80	8.020	24.54	28.64	32.57	33.37	36.52	38.88	40.45	44.40	45.18	49.12	52.27	53.84	60.14	68.02	75.90	77.47
1.429	63	6.316	90	9.023	23.19	27.29	31.23	32.02	35.17	37.53	39.11	43.05	43.84	47.77	50.92	52.50	58.80	66.68	74.56	76.13
1.432	37	3.709	53	5.314	28.18	32.27	36.21	37.00	40.15	42.51	44.09	48.03	48.81	52.75	55.90	57.47	63.77	71.65	79.52	81.10
1.436	39	3.910	56	5.614	27.78	31.88	35.81	36.60	39.76	42.12	43.69	47.63	48.42	52.35	55.50	57.08	63.38	71.25	79.13	80.71
1.440	25	2.506	36	3.609	30.47	34.56	38.50	39.29	42.44	44.80	46.37	50.31	51.10	55.03	58.18	59.76	66.06	73.94	81.81	83.39
1.444	27	2.707	39	3.910	30.07	34.17	38.10	38.89	42.04	44.40	45.98	49.92	50.70	54.64	57.79	59.36	65.67	73.54	81.42	82.99
1.448	29	2.907	42	4.211	29.68	33.77	37.71	38.50	41.65	44.01	45.58	49.53	50.31	54.25	57.40	58.97	65.27	73.15	81.02	82.60
1.452	31	3.108	45	4.511	29.28	33.38	37.31	38.10	41.26	43.62	45.19	49.13	49.92	53.85	57.00	58.58	64.88	72.75	80.63	82.20
1.455	22	2.206	32	3.208	31.02	35.11	39.05	39.84	42.99	45.35	46.93	50.87	51.65	55.59	58.74	60.31	66.61	74.49	82.36	83.94
1.455	33	3.308	48	4.812	28.89	32.98	36.92	37.71	40.86	43.22	44.80	48.74	49.52	53.46	56.61	58.18	64.48	72.36	80.23	81.81
1.462	26	2.607	38	3.810	30.23	34.32	38.26	39.05	42.20	44.56	46.14	50.08	50.86	54.80	57.95	59.52	65.82	73.70	81.57	83.15
1.463	41	4.110	60	6.015	27.31	31.40	35.34	36.13	39.28	41.64	43.22	47.16	47.94	51.88	55.03	56.60	62.91	70.78	78.66	80.23
1.464	28	2.807	41	4.110	29.84	33.93	37.87	38.66	41.81	44.17	45.74	49.68	50.47	54.40	57.55	59.13	65.43	73.30	81.18	82.75
1.471	34	3.409	50	5.013	28.65	32.75	36.68	37.47	40.62	42.98	44.56	48.50	49.28	53.22	56.37	57.94	64.25	72.12	80.00	81.57
1.472	36	3.609	53	5.314	28.25	32.35	36.29	37.08	40.23	42.59	44.16	48.10	48.89	52.83	55.98	57.55	63.85	71.73	79.60	81.18
1.474	38	3.810	56	5.614	27.86	31.96	35.89	36.68	39.83	42.19	43.77	47.71	48.50	52.43	55.58	57.16	63.46	71.33	79.21	80.78
1.479	48	4.812	71	7.118	25.88	29.98	33.92	34.71	37.86	40.22	41.79	45.74	46.52	50.46	53.61	55.18	61.48	69.36	77.24	78.81
1.480	25	2.506	37	3.709	30.39	34.48	38.42	39.21	42.36	44.72	46.29	50.24	51.02	54.96	58.11	59.68	65.98	73.86	81.73	83.31
1.481	27	2.707	40	4.010	29.99	34.09	38.02	38.81	41.96	44.32	45.90	49.84	50.63	54.56	57.71	59.29	65.59	73.46	81.34	82.91
1.489	45	4.511	67	6.717	26.43	30.53	34.47	35.26	38.41	40.77	42.35	46.29	47.07	51.01	54.16	55.74	62.04	69.91	77.79	79.36
1.493	75	7.519	112	11.229	20.47	24.58	28.52	29.31	32.47	34.83	36.41	40.35	41.14	45.08	48.23	49.81	56.11	63.99	71.87	73.44
1.500	22	2.206	33	3.308	30.94	35.03	38.97	39.76	42.91	45.27	46.85	50.79	51.57	55.51	58.66	60.23	66.53	74.41	82.28	83.86
1.500	26	2.607	39	3.910	30.15	34.25	38.18	38.97	42.12	44.48	46.06	50.00	50.78	54.72	57.87	59.44	65.74	73.62	81.49	83.07
1.500	28	2.807	42	4.211	29.75	33.85	37.79	38.58	41.73	44.09	45.66	49.60	50.39	54.32	57.47	59.05	65.35	73.22	81.10	82.68
1.500	30	3.008	45	4.511	29.36	33.46	37.39	38.18	41.33	43.69	45.27	49.21	49.99	53.93	57.08	58.65	64.96	72.83	80.71	82.28
1.500	32	3.208	48	4.812	28.97	33.06	37.00	37.79	40.94	43.30	44.87	48.81	49.60	53.54	56.69	58.26	64.56	72.44	80.31	81.89
1.500	40	4.010	60	6.015	27.38	31.48	35.42	36.21	39.36	41.72	43.29	47.24	48.02	51.96	55.11	56.68	62.98	70.86	78.74	80.31
1.500	42	4.211	63	6.316	26.99	31.08	35.02	35.81	38.96	41.32	42.90	46.84	47.63	51.56	54.71	56.29	62.59	70.46	78.34	79.92
1.500	50	5.013	75	7.519	25.40	29.50	33.44	34.23	37.38	39.74	41.32	45.26	46.05	49.98	53.13	54.71	61.01	68.89	76.76	78.34
1.500	60	6.015	90	9.023	23.42	27.52	31.46	32.25	35.40	37.76	39.34	43.28	44.07	48.01	51.16	52.73	59.04	66.91	74.79	76.36
1.509	53	5.314	80	8.020	24.77	28.87	32.80	33.60	36.75	39.11	40.69	44.63	45.41	49.35	52.50	54.08	60.38	68.25	76.13	77.71
1.514	35	3.509	53	5.314	28.33	32.43	36.36	37.15	40.31	42.67	44.24	48.18	48.97	52.90	56.05	57.63	63.93	71.80	79.68	81.26
1.514	37	3.709	56	5.614	27.94	32.03	35.97	36.76	39.91	42.27	43.85	47.79	48.57	52.51	55.66	57.23	63.54	71.41	79.29	80.86
1.515	33	3.308	50	5.013	28.73	32.82	36.76	37.55	40.70	43.06	44.64	48.58	49.36	53.30	56.45	58.02	64.32	72.20	80.08	81.65
1.519	27	2.707	41	4.110	29.91	34.01	37.94	38.73	41.89	44.25	45.82	49.76	50.55	54.48	57.63	59.21	65.51	73.38	81.26	82.83
1.520	25	2.506	38	3.810	30.31	34.40	38.34	39.13	42.28	44.64	46.21	50.16	50.94	54.88	58.03	59.60	65.90	73.78	81.65	83.23
1.537	41	4.110	63	6.316	27.06	31.16	35.10	35.89	39.04	41.40	42.98	46.92	47.70	51.64	54.79	56.37	62.67	70.54	78.42	79.99
1.538	26	2.607	40	4.010	30.07	34.17	38.10	38.89	42.04	44.40	45.98	49.92	50.70	54.64	57.79	59.36	65.66	73.54	81.41	82.99
1.538	39	3.910	60	6.015	27.46	31.56	35.49	36.28	39.44	41.80	43.37	47.31	48.10	52.03	55.18	56.76	63.06	70.94	78.81	80.39
1.545	22	2.206	34	3.409	30.86	34.95	38.89	39.68	42.83	45.19	46.77	50.71	51.49	55.43	58.58	60.15	66.45	74.33	82.20	83.78
1.548	31	3.108	48	4.812	29.04	33.14	37.07	37.87	41.02	43.38	44.95	48.89	49.68	53.61	56.76	58.34	64.64	72.51	80.39	81.97
1.552	29	2.907	45	4.511	29.44	33.53	37.47	38.26	41.41	43.77	45.35	49.29	50.07	54.01	57.16	58.73	65.03	72.91	80.78	82.36
1.556	27	2.707	42	4.211	29.83	33.93	37.86	38.65	41.80	44.17	45.74	49.68	50.47	54.40	57.55	59.13	65.43	73.30	81.18	82.75
1.556	36	3.609	56	5.614	28.01	32.11	36.05	36.84	39.99	42.35	43.92	47.87	48.65	52.59	55.74	57.31	63.61	71.49	79.36	80.94
1.559	34	3.409	53	5.314	28.41	32.51	36.44	37.23	40.38	42.74	44.32	48.26	49.04	52.98	56.13	57.71	64.01	71.88	79.76	81.33
1.560	25	2.506	39	3.910	30.23	34.32	38.26	39.05	42.20	44.56	46.14	50.08	50.86	54.80	57.95	59.52	65.82	73.70	81.57	83.15
1.563	32	3.208	50	5.013	28.80	32.90	36.84	37.63	40.78	43.14	44.71	48.65	49.44	53.38	56.53	58.10	64.40	72.28	80.15	81.73
1.563	48	4.812	75	7.519	25.55	29.65	33.59	34.38	37.54	39.90	41.47	45.42	46.20	50.14	53.29	54.86	61.17	69.04	76.92	78.49
1.575	40	4.010	63	6.316	27.14	31.24	35.18	35.97	39.12	41.48	43.05	47.00	47.78	51.72	54.87	56.44	62.74	70.62	78.50	80.07
1.577	26	2.607	41	4.110	29.99	34.09	38.02	38.81	41.96	44.32	45.90	49.84	50.62	54.56	57.71	59.28	65.59	73.46	81.34	82.91
1.577	71	7.118	112	11.229	20.76	24.88	28.82	29.61	32.77	35.14	36.71	40.66	41.44	45.38	48.54	50.11	56.42	64.30	72.18	73.75
Length Factor*					1.18	1.22	1.26	1.26	1.29	1.31	1.32	1.35	1.36	1.38	1.40	1.41	1.45	1.49	1.52	1.53

Center distance is greater than eight times the small sprocket and the large sprocket is not flanged. See Engineering Section for details.
* The length correction factor must be used to determine the proper belt width.

8M HT500 Selection Table

Speed Ratio	Sprocket Combinations: Driver No. of Teeth	Driver Pitch Dia. Inches	Driven No. of Teeth	Driven Pitch Dia. Inches	Center Distance, Inches: 640-8MX	720-8MX	800-8MX	896-8MX	960-8MX	1000-8MX	1040-8MX	1120-8MX	1200-8MX	1224-8MX	1280-8MX	1440-8MX	1600-8MX	1760-8MX
Length Factor*					0.79	0.83	0.87	0.91	0.94	0.96	0.97	1.00	1.03	1.03	1.05	1.10	1.14	1.17
1.578	45	4.511	71	7.118			6.49	8.41	9.68	10.47	11.26	12.85	14.43	14.90	16.01	19.17	22.32	25.48
1.579	38	3.810	60	6.015		6.36	7.96	9.86	11.13	11.92	12.71	14.29	15.87	16.34	17.44	20.60	23.75	26.91
1.591	22	2.206	35	3.509	8.09	9.66	11.24	13.14	14.40	15.18	15.97	17.54	19.12	19.60	20.70	23.85	27.00	30.15
1.595	42	4.211	67	6.717			7.06	8.97	10.24	11.03	11.82	13.40	14.98	15.46	16.56	19.72	22.88	26.03
1.600	25	2.506	40	4.010	7.44	9.03	10.61	12.50	13.76	14.55	15.33	16.91	18.49	18.96	20.06	23.22	26.37	29.52
1.600	30	3.008	48	4.812	6.39	7.98	9.57	11.46	12.73	13.51	14.30	15.88	17.45	17.93	19.03	22.18	25.34	28.49
1.600	35	3.509	56	5.614	5.33	6.93	8.52	10.42	11.69	12.48	13.26	14.84	16.42	16.90	18.00	21.15	24.31	27.46
1.600	50	5.013	80	8.020				7.25	8.53	9.33	10.12	11.71	13.30	13.78	14.88	18.05	21.21	24.36
1.606	33	3.308	53	5.314	5.74	7.33	8.92	10.82	12.09	12.87	13.66	15.24	16.82	17.29	18.40	21.55	24.70	27.86
1.607	28	2.807	45	4.511	6.80	8.38	9.97	11.86	13.12	13.91	14.70	16.28	17.85	18.33	19.43	22.58	25.73	28.88
1.607	56	5.614	90	9.023						8.01	8.81	10.41	12.00	12.48	13.59	16.76	19.93	23.09
1.613	31	3.108	50	5.013	6.15	7.74	9.32	11.22	12.49	13.27	14.06	15.64	17.22	17.69	18.79	21.95	25.10	28.25
1.615	26	2.607	42	4.211	7.20	8.78	10.36	12.26	13.52	14.31	15.09	16.67	18.25	18.72	19.82	22.98	26.13	29.28
1.615	39	3.910	63	6.316		6.02	7.62	9.53	10.80	11.59	12.38	13.96	15.54	16.02	17.12	20.28	23.43	26.59
1.622	37	3.709	60	6.015		6.43	8.03	9.94	11.20	11.99	12.78	14.36	15.94	16.42	17.52	20.68	23.83	26.98
1.634	41	4.110	67	6.717			7.13	9.04	10.31	11.10	11.90	13.48	15.06	15.54	16.64	19.80	22.95	26.11
1.636	22	2.206	36	3.609	8.00	9.58	11.16	13.05	14.32	15.10	15.89	17.46	19.04	19.52	20.62	23.77	26.92	30.07
1.640	25	2.506	41	4.110	7.36	8.94	10.52	12.42	13.68	14.47	15.25	16.83	18.41	18.88	19.98	23.13	26.29	29.44
1.647	34	3.409	56	5.614	5.40	7.00	8.59	10.50	11.76	12.55	13.34	14.92	16.50	16.97	18.07	21.23	24.38	27.54
1.655	29	2.907	48	4.812	6.47	8.06	9.64	11.54	12.80	13.59	14.38	15.95	17.53	18.01	19.11	22.26	25.41	28.57
1.656	32	3.208	53	5.314	5.81	7.41	9.00	10.90	12.16	12.95	13.74	15.32	16.89	17.37	18.47	21.63	24.78	27.93
1.658	38	3.810	63	6.316		6.09	7.69	9.61	10.87	11.66	12.45	14.04	15.62	16.09	17.20	20.35	23.51	26.66
1.667	27	2.707	45	4.511	6.87	8.46	10.04	11.94	13.20	13.99	14.77	16.35	17.93	18.40	19.51	22.66	25.81	28.96
1.667	30	3.008	50	5.013	6.22	7.81	9.40	11.30	12.56	13.35	14.13	15.71	17.29	17.77	18.87	22.02	25.18	28.33
1.667	36	3.609	60	6.015		6.50	8.10	10.01	11.28	12.07	12.85	14.44	16.02	16.49	17.60	20.75	23.91	27.06
1.667	45	4.511	75	7.519				8.05	9.33	10.12	10.92	12.51	14.09	14.57	15.67	18.84	22.00	25.15
1.667	48	4.812	80	8.020				7.39	8.67	9.47	10.27	11.86	13.45	13.92	15.03	18.20	21.36	24.51
1.672	67	6.717	112	11.229										9.74	10.87	14.07	17.25	20.43
1.675	40	4.010	67	6.717			7.20	9.11	10.39	11.18	11.97	13.55	15.13	15.61	16.72	19.87	23.03	26.19
1.680	25	2.506	42	4.211	7.27	8.86	10.44	12.34	13.60	14.38	15.17	16.75	18.32	18.80	19.90	23.05	26.21	29.36
1.682	22	2.206	37	3.709	7.92	9.50	11.08	12.97	14.23	15.02	15.81	17.38	18.96	19.43	20.54	23.69	26.84	29.99
1.690	42	4.211	71	7.118			6.69	8.62	9.90	10.69	11.48	13.07	14.65	15.13	16.23	19.39	22.55	25.71
1.697	33	3.308	56	5.614	5.47	7.07	8.67	10.57	11.84	12.62	13.41	14.99	16.57	17.05	18.15	21.31	24.46	27.61
1.698	53	5.314	90	9.023					7.41	8.21	9.02	10.62	12.22	12.70	13.81	16.98	20.15	23.31
1.703	37	3.709	63	6.316		6.16	7.77	9.68	10.95	11.74	12.53	14.11	15.69	16.17	17.27	20.43	23.59	26.74
1.710	31	3.108	53	5.314	5.88	7.48	9.07	10.97	12.24	13.02	13.81	15.39	16.97	17.45	18.55	21.70	24.86	28.01
1.714	28	2.807	48	4.812	6.54	8.13	9.71	11.61	12.88	13.66	14.45	16.03	17.61	18.08	19.18	22.34	25.49	28.64
1.714	35	3.509	60	6.015		6.58	8.17	10.08	11.35	12.14	12.93	14.51	16.09	16.57	17.67	20.83	23.98	27.14
1.718	39	3.910	67	6.717			7.27	9.19	10.46	11.25	12.04	13.63	15.21	15.69	16.79	19.95	23.11	26.26
1.724	29	2.907	50	5.013	6.29	7.88	9.47	11.37	12.64	13.42	14.21	15.79	17.37	17.84	18.95	22.10	25.25	28.41
1.727	22	2.206	38	3.810	7.83	9.42	11.00	12.89	14.15	14.94	15.72	17.30	18.88	19.35	20.45	23.61	26.76	29.91
1.731	26	2.607	45	4.511	6.94	8.53	10.11	12.01	13.28	14.06	14.85	16.43	18.00	18.48	19.58	22.73	25.89	29.04
1.732	41	4.110	71	7.118			6.76	8.69	9.97	10.76	11.55	13.14	14.72	15.20	16.31	19.47	22.63	25.78
1.750	32	3.208	56	5.614	5.54	7.14	8.74	10.64	11.91	12.70	13.49	15.07	16.65	17.12	18.23	21.38	24.54	27.69
1.750	36	3.609	63	6.316		6.23	7.84	9.75	11.02	11.81	12.60	14.19	15.77	16.24	17.35	20.51	23.66	26.82
1.750	80	8.020	140	14.036													13.84	17.06
1.763	38	3.810	67	6.717			7.34	9.26	10.53	11.32	12.11	13.70	15.28	15.76	16.86	20.02	23.18	26.34
1.765	34	3.409	60	6.015		6.65	8.25	10.15	11.42	12.21	13.00	14.59	16.17	16.64	17.75	20.90	24.06	27.21
1.767	30	3.008	53	5.314	5.95	7.55	9.14	11.04	12.31	13.10	13.89	15.47	17.04	17.52	18.62	21.78	24.93	28.09
1.773	22	2.206	39	3.910	7.75	9.33	10.91	12.81	14.07	14.86	15.64	17.22	18.80	19.27	20.37	23.53	26.68	29.83
1.775	40	4.010	71	7.118			6.83	8.76	10.04	10.83	11.63	13.21	14.80	15.28	16.38	19.54	22.70	25.86
1.778	27	2.707	48	4.812	6.61	8.20	9.79	11.69	12.95	13.74	14.53	16.11	17.68	18.16	19.26	22.41	25.57	28.72
1.778	45	4.511	80	8.020				7.59	8.88	9.68	10.48	12.08	13.67	14.14	15.25	18.42	21.58	24.74
1.778	63	6.316	112	11.229									9.52	10.01	11.14	14.35	17.54	20.72
1.786	28	2.807	50	5.013	6.36	7.96	9.54	11.44	12.71	13.50	14.29	15.86	17.44	17.92	19.02	22.18	25.33	28.48
1.786	42	4.211	75	7.519				8.26	9.54	10.34	11.13	12.72	14.31	14.79	15.90	19.06	22.22	25.38
1.800	25	2.506	45	4.511	7.02	8.61	10.19	12.09	13.35	14.14	14.93	16.50	18.08	18.56	19.66	22.81	25.96	29.12
1.800	35	3.509	63	6.316		6.30	7.91	9.82	11.09	11.89	12.68	14.26	15.84	16.32	17.42	20.58	23.74	26.89
1.800	50	5.013	90	9.023					7.61	8.42	9.23	10.84	12.43	12.92	14.03	17.20	20.37	23.54
1.806	31	3.108	56	5.614	5.61	7.22	8.81	10.72	11.98	12.77	13.56	15.14	16.72	17.20	18.30	21.46	24.61	27.77
1.811	37	3.709	67	6.717		5.79	7.41	9.33	10.60	11.40	12.19	13.77	15.36	15.83	16.94	20.10	23.26	26.41
1.818	22	2.206	40	4.010	7.66	9.25	10.83	12.73	13.99	14.78	15.56	17.14	18.72	19.19	20.29	23.45	26.60	29.75
1.818	33	3.308	60	6.015		6.72	8.32	10.23	11.50	12.29	13.08	14.66	16.24	16.72	17.82	20.98	24.13	27.29
1.821	39	3.910	71	7.118			6.90	8.83	10.11	10.91	11.70	13.29	14.87	15.35	16.46	19.62	22.78	25.93
1.828	29	2.907	53	5.314	6.02	7.62	9.21	11.12	12.38	13.17	13.96	15.54	17.12	17.60	18.70	21.86	25.01	28.16
1.829	41	4.110	75	7.519			6.39	8.33	9.62	10.41	11.21	12.80	14.39	14.86	15.97	19.14	22.30	25.45
1.846	26	2.607	48	4.812	6.68	8.27	9.86	11.76	13.03	13.81	14.60	16.18	17.76	18.23	19.34	22.49	25.64	28.80
1.852	27	2.707	50	5.013	6.43	8.03	9.62	11.52	12.78	13.57	14.36	15.94	17.52	17.99	19.10	22.25	25.41	28.56
1.853	34	3.409	63	6.316		6.37	7.98	9.90	11.17	11.96	12.75	14.33	15.92	16.39	17.50	20.66	23.81	26.97
1.861	36	3.609	67	6.717		5.86	7.48	9.40	10.68	11.47	12.26	13.85	15.43	15.91	17.01	20.18	23.33	26.49
1.864	22	2.206	41	4.110	7.58	9.16	10.75	12.64	13.91	14.69	15.48	17.06	18.64	19.11	20.21	23.37	26.52	29.67
1.867	30	3.008	56	5.614	5.68	7.29	8.88	10.79	12.06	12.85	13.64	15.22	16.80	17.27	18.38	21.53	24.69	27.84
1.867	60	6.015	112	11.229									9.73	10.22	11.35	14.57	17.76	20.94
1.867	75	7.519	140	14.036													14.19	17.41
1.868	38	3.810	71	7.118			6.97	8.90	10.18	10.98	11.77	13.36	14.95	15.42	16.53	19.69	22.85	26.01
1.875	32	3.208	60	6.015	5.16	6.79	8.39	10.30	11.57	12.36	13.15	14.73	16.32	16.79	17.90	21.05	24.21	27.37
1.875	40	4.010	75	7.519			6.46	8.40	9.69	10.48	11.28	12.87	14.46	14.94	16.04	19.21	22.37	25.53
1.875	48	4.812	90	9.023					7.75	8.56	9.37	10.98	12.58	13.06	14.17	17.35	20.52	23.69
Length Factor*					0.79	0.83	0.87	0.91	0.94	0.96	0.97	1.00	1.03	1.03	1.05	1.10	1.14	1.17

* The length correction factor must be used to determine the proper belt width.

SELECTION

8M HT500 Selection Table (Continued)

Speed Ratio	Sprocket Combinations: Driver No. of Teeth	Driver Pitch Dia. Inches	Driven No. of Teeth	Driven Pitch Dia. Inches	Center Distance, Inches: 1792-8MX	2000-8MX	2200-8MX	2240-8MX	2400-8MX	2520-8MX	2600-8MX	2800-8MX	2840-8MX	3048-8MX	3200-8MX	3280-8MX	3600-8MX	4000-8MX	4400-8MX	4480-8MX
Length Factor*					1.18	1.22	1.26	1.26	1.29	1.31	1.32	1.35	1.36	1.38	1.40	1.41	1.45	1.49	1.52	1.53
1.578	45	4.511	71	7.118	26.11	30.21	34.15	34.94	38.09	40.45	42.03	45.97	46.75	50.85	53.84	55.42	61.72	69.59	77.47	79.05
1.579	38	3.810	60	6.015	27.54	31.63	35.57	36.36	39.51	41.87	43.45	47.39	48.18	52.27	55.26	56.84	63.14	71.01	78.89	80.47
1.591	22	2.206	35	3.509	30.78	34.88	38.81	39.60	42.75	45.11	46.69	50.63	51.41	55.51	58.50	60.07	66.37	74.25	82.12	83.70
1.595	42	4.211	67	6.717	26.66	30.76	34.70	35.49	38.64	41.00	42.58	46.52	47.31	51.40	54.39	55.97	62.27	70.15	78.02	79.60
1.600	25	2.506	40	4.010	30.15	34.24	38.18	38.97	42.12	44.48	46.06	50.00	50.78	54.88	57.87	59.44	65.74	73.62	81.49	83.07
1.600	30	3.008	48	4.812	29.12	33.22	37.15	37.94	41.09	43.45	45.03	48.97	49.76	53.85	56.84	58.42	64.72	72.59	80.47	82.04
1.600	35	3.509	56	5.614	28.09	32.19	36.12	36.91	40.07	42.43	44.00	47.94	48.73	52.82	55.81	57.39	63.69	71.57	79.44	81.02
1.600	50	5.013	80	8.020	24.99	29.10	33.03	33.83	36.98	39.34	40.92	44.86	45.64	49.74	52.73	54.31	60.61	68.49	76.36	77.94
1.606	33	3.308	53	5.314	28.49	32.58	36.52	37.31	40.46	42.82	44.40	48.34	49.12	53.22	56.21	57.78	64.09	71.96	79.84	81.41
1.607	28	2.807	45	4.511	29.52	33.61	37.55	38.34	41.49	43.85	45.42	49.37	50.15	54.25	57.24	58.81	65.11	72.99	80.86	82.44
1.607	56	5.614	90	9.023	23.72	27.82	31.76	32.55	35.71	38.07	39.65	43.59	44.38	48.47	51.47	53.04	59.34	67.22	75.10	76.68
1.613	31	3.108	50	5.013	28.88	32.98	36.91	37.70	40.86	43.22	44.79	48.73	49.52	53.61	56.60	58.18	64.48	72.36	80.23	81.81
1.615	26	2.607	42	4.211	29.91	34.01	37.94	38.73	41.88	44.24	45.82	49.76	50.54	54.64	57.63	59.20	65.51	73.38	81.26	82.83
1.615	39	3.910	63	6.316	27.22	31.32	35.25	36.04	39.20	41.56	43.13	47.07	47.86	51.95	54.95	56.52	62.82	70.70	78.57	80.15
1.622	37	3.709	60	6.015	27.61	31.71	35.65	36.44	39.59	41.95	43.53	47.47	48.25	52.35	55.34	56.92	63.22	71.09	78.97	80.54
1.634	41	4.110	67	6.717	26.74	30.84	34.78	35.57	38.72	41.08	42.66	46.60	47.38	51.48	54.47	56.05	62.35	70.22	78.10	79.68
1.636	22	2.206	36	3.609	30.70	34.80	38.73	39.52	42.67	45.03	46.61	50.55	51.33	55.43	58.42	59.99	66.29	74.17	82.04	83.62
1.640	25	2.506	41	4.110	30.07	34.16	38.10	38.89	42.04	44.40	45.98	49.92	50.70	54.80	57.79	59.36	65.66	73.54	81.41	82.99
1.647	34	3.409	56	5.614	28.17	32.26	36.20	36.99	40.14	42.50	44.08	48.02	48.81	52.90	55.89	57.47	63.77	71.64	79.52	81.10
1.655	29	2.907	48	4.812	29.20	33.29	37.23	38.02	41.17	43.53	45.11	49.05	49.83	53.93	56.92	58.49	64.80	72.67	80.55	82.12
1.656	32	3.208	53	5.314	28.56	32.66	36.60	37.39	40.54	42.90	44.47	48.42	49.20	53.30	56.29	57.86	64.16	72.04	79.91	81.49
1.658	38	3.810	63	6.316	27.29	31.39	35.33	36.12	39.27	41.63	43.21	47.15	47.94	52.03	55.02	56.60	62.90	70.78	78.65	80.23
1.667	27	2.707	45	4.511	29.59	33.69	37.63	38.42	41.57	43.93	45.50	49.44	50.23	54.32	57.31	58.89	65.19	73.07	80.94	82.52
1.667	30	3.008	50	5.013	28.96	33.06	36.99	37.78	40.93	43.29	44.87	48.81	49.60	53.69	56.68	58.26	64.56	72.43	80.31	81.88
1.667	36	3.609	60	6.015	27.69	31.79	35.73	36.52	39.67	42.03	43.60	47.55	48.33	52.43	55.42	56.99	63.29	71.17	79.05	80.62
1.667	45	4.511	75	7.519	25.78	29.88	33.82	34.61	37.77	40.13	41.70	45.65	46.43	50.53	53.52	55.10	61.40	69.28	77.15	78.73
1.667	48	4.812	80	8.020	25.15	29.25	33.19	33.98	37.13	39.49	41.07	45.01	45.80	49.90	52.89	54.46	60.77	68.64	76.52	78.10
1.672	67	6.717	112	11.229	21.06	25.17	29.12	29.92	33.07	35.44	37.02	40.96	41.75	45.85	48.84	50.42	56.73	64.61	72.49	74.06
1.675	40	4.010	67	6.717	26.82	30.92	34.85	35.64	38.80	41.16	42.73	46.68	47.46	51.56	54.55	56.12	62.43	70.30	78.18	79.75
1.680	25	2.506	42	4.211	29.99	34.08	38.02	38.81	41.96	44.32	45.90	49.84	50.62	54.72	57.71	59.28	65.58	73.46	81.34	82.91
1.682	22	2.206	37	3.709	30.62	34.72	38.65	39.44	42.59	44.95	46.53	50.47	51.25	55.35	58.34	59.91	66.22	74.09	81.97	83.54
1.690	42	4.211	71	7.118	26.34	30.44	34.38	35.17	38.32	40.68	42.26	46.20	46.98	51.08	54.07	55.65	61.95	69.83	77.70	79.28
1.697	33	3.308	56	5.614	28.24	32.34	36.28	37.07	40.22	42.58	44.16	48.10	48.88	52.98	55.97	57.55	63.85	71.72	79.60	81.17
1.698	53	5.314	90	9.023	23.94	28.05	31.99	32.78	35.94	38.30	39.88	43.82	44.61	48.70	51.70	53.27	59.58	67.45	75.33	76.91
1.703	37	3.709	63	6.316	27.37	31.47	35.41	36.20	39.35	41.71	43.29	47.23	48.01	52.11	55.10	56.68	62.98	70.85	78.73	80.31
1.710	31	3.108	53	5.314	28.64	32.74	36.67	37.46	40.62	42.98	44.55	48.49	49.28	53.37	56.36	57.94	64.24	72.12	79.99	81.57
1.714	28	2.807	48	4.812	29.27	33.37	37.31	38.10	41.25	43.61	45.18	49.13	49.91	54.01	57.00	58.57	64.87	72.75	80.62	82.20
1.714	35	3.509	60	6.015	27.77	31.87	35.80	36.59	39.75	42.11	43.68	47.62	48.41	52.50	55.50	57.07	63.37	71.25	79.12	80.70
1.718	39	3.910	67	6.717	26.89	30.99	34.93	35.72	38.87	41.23	42.81	46.75	47.54	51.63	54.63	56.20	62.50	70.38	78.26	79.83
1.724	29	2.907	50	5.013	29.04	33.13	37.07	37.86	41.01	43.37	44.95	48.89	49.67	53.77	56.76	58.34	64.64	72.51	80.39	81.96
1.727	22	2.206	38	3.810	30.54	34.64	38.57	39.36	42.51	44.87	46.45	50.39	51.17	55.27	58.26	59.83	66.14	74.01	81.89	83.46
1.731	26	2.607	45	4.511	29.67	33.77	37.70	38.49	41.64	44.00	45.58	49.52	50.31	54.40	57.39	58.97	65.27	73.14	81.02	82.59
1.732	41	4.110	71	7.118	26.41	30.51	34.45	35.24	38.40	40.76	42.33	46.28	47.06	51.16	54.15	55.73	62.03	69.91	77.78	79.36
1.750	32	3.208	56	5.614	28.32	32.42	36.36	37.15	40.30	42.66	44.23	48.18	48.96	53.06	56.05	57.62	63.92	71.80	79.68	81.25
1.750	36	3.609	63	6.316	27.45	31.55	35.48	36.27	39.43	41.79	43.36	47.31	48.09	52.19	55.18	56.75	63.06	70.93	78.81	80.38
1.750	80	8.020	140	14.036	17.70	21.84	25.81	26.60	29.77	32.14	33.72	37.68	38.46	42.57	45.57	47.15	53.46	61.34	69.23	70.80
1.763	38	3.810	67	6.717	26.97	31.07	35.01	35.80	38.95	41.31	42.89	46.83	47.61	51.71	54.70	56.28	62.58	70.46	78.33	79.91
1.765	34	3.409	60	6.015	27.84	31.94	35.88	36.67	39.82	42.18	43.76	47.70	48.49	52.58	55.57	57.15	63.45	71.33	79.20	80.78
1.767	30	3.008	53	5.314	28.72	32.81	36.75	37.54	40.69	43.05	44.63	48.57	49.36	53.45	56.44	58.02	64.32	72.19	80.07	81.65
1.773	22	2.206	39	3.910	30.46	34.56	38.49	39.28	42.43	44.79	46.37	50.31	51.09	55.19	58.18	59.76	66.06	73.93	81.81	83.38
1.775	40	4.010	71	7.118	26.49	30.59	34.53	35.32	38.47	40.84	42.41	46.35	47.14	51.24	54.23	55.80	62.11	69.98	77.86	79.43
1.778	27	2.707	48	4.812	29.35	33.45	37.38	38.18	41.33	43.69	45.26	49.20	49.99	54.08	57.07	58.65	64.95	72.83	80.70	82.28
1.778	45	4.511	80	8.020	25.37	29.48	33.42	34.21	37.36	39.72	41.30	45.24	46.03	50.13	53.12	54.70	61.00	68.88	76.75	78.33
1.778	63	6.316	112	11.229	21.35	25.47	29.42	30.22	33.37	35.74	37.32	41.27	42.05	46.15	49.15	50.73	57.03	64.91	72.79	74.37
1.786	28	2.807	50	5.013	29.11	33.21	37.15	37.94	41.09	43.45	45.02	48.97	49.75	53.85	56.84	58.41	64.71	72.59	80.47	82.04
1.786	42	4.211	75	7.519	26.01	30.11	34.05	34.84	38.00	40.36	41.93	45.88	46.66	50.76	53.75	55.33	61.63	69.51	77.38	78.96
1.800	25	2.506	45	4.511	29.75	33.84	37.78	38.57	41.72	44.08	45.66	49.60	50.38	54.48	57.47	59.05	65.35	73.22	81.10	82.67
1.800	35	3.509	63	6.316	27.52	31.62	35.56	36.35	39.50	41.86	43.44	47.38	48.17	52.26	55.26	56.83	63.13	71.01	78.89	80.46
1.800	50	5.013	90	9.023	24.17	28.28	32.22	33.01	36.17	38.53	40.11	44.05	44.84	48.94	51.93	53.50	59.81	67.69	75.56	77.14
1.806	31	3.108	56	5.614	28.40	32.50	36.43	37.22	40.38	42.74	44.31	48.25	49.04	53.13	56.13	57.70	64.00	71.88	79.75	81.33
1.811	37	3.709	67	6.717	27.04	31.15	35.08	35.87	39.03	41.39	42.97	46.91	47.69	51.79	54.78	56.36	62.66	70.54	78.41	79.99
1.818	22	2.206	40	4.010	30.38	34.48	38.41	39.20	42.35	44.71	46.29	50.23	51.01	55.11	58.10	59.68	65.98	73.85	81.73	83.30
1.818	33	3.308	60	6.015	27.92	32.02	35.96	36.75	39.90	42.26	43.84	47.78	48.56	52.66	55.65	57.23	63.53	71.40	79.28	80.86
1.821	39	3.910	71	7.118	26.57	30.67	34.61	35.40	38.55	40.91	42.49	46.43	47.22	51.31	54.30	55.88	62.18	70.06	77.94	79.51
1.828	29	2.907	53	5.314	28.79	32.89	36.83	37.62	40.77	43.13	44.71	48.65	49.43	53.53	56.52	58.10	64.40	72.27	80.15	81.72
1.829	41	4.110	75	7.519	26.09	30.19	34.13	34.92	38.07	40.44	42.01	45.95	46.74	50.84	53.83	55.41	61.71	69.59	77.46	79.04
1.846	26	2.607	48	4.812	29.43	33.53	37.46	38.25	41.40	43.76	45.34	49.28	50.07	54.16	57.15	58.73	65.03	72.90	80.78	82.36
1.852	27	2.707	50	5.013	29.19	33.29	37.22	38.01	41.17	43.53	45.10	49.04	49.83	53.92	56.92	58.49	64.79	72.67	80.54	82.12
1.853	34	3.409	63	6.316	27.60	31.70	35.64	36.43	39.58	41.94	43.52	47.46	48.25	52.34	55.33	56.91	63.21	71.09	78.96	80.54
1.861	36	3.609	67	6.717	27.12	31.22	35.16	35.95	39.10	41.47	43.04	46.98	47.77	51.87	54.86	56.43	62.74	70.61	78.49	80.06
1.864	22	2.206	41	4.110	30.30	34.40	38.33	39.12	42.27	44.63	46.21	50.15	50.94	55.03	58.02	59.60	65.90	73.77	81.65	83.22
1.867	30	3.008	56	5.614	28.47	32.57	36.51	37.30	40.45	42.81	44.39	48.33	49.12	53.21	56.20	57.78	64.08	71.96	79.83	81.41
1.867	60	6.015	112	11.229	21.57	25.69	29.65	30.44	33.60	35.97	37.55	41.49	42.28	46.38	49.38	50.95	57.26	65.14	73.03	74.60
1.867	75	7.519	140	14.036	18.05	22.20	26.17	26.97	30.14	32.51	34.09	38.05	38.84	42.95	45.95	47.52	53.84	61.72	69.61	71.19
1.868	38	3.810	71	7.118	26.64	30.74	34.68	35.47	38.63	40.99	42.57	46.51	47.29	51.39	54.38	55.96	62.26	70.14	78.01	79.59
1.875	32	3.208	60	6.015	28.00	32.10	36.03	36.82	39.98	42.34	43.91	47.86	48.64	52.74	55.73	57.30	63.61	71.48	79.36	80.93
1.875	40	4.010	75	7.519	26.16	30.26	34.21	35.00	38.15	40.51	42.09	46.03	46.82	50.91	53.91	55.48	61.79	69.66	77.54	79.12
1.875	48	4.812	90	9.023	24.32	28.43	32.37	33.16	36.32	38.68	40.26	44.20	44.99	49.09	52.08	53.66	59.96	67.84	75.72	77.30
Length Factor*					1.18	1.22	1.26	1.26	1.29	1.31	1.32	1.35	1.36	1.38	1.40	1.41	1.45	1.49	1.52	1.53

Center distance is greater than eight times the small sprocket and the large sprocket is not flanged. See Engineering Section for details.
* The length correction factor must be used to determine the proper belt width.

8M HT500 Selection Table

Speed Ratio	Sprocket Combinations: Driver No. of Teeth	Driver Pitch Dia. Inches	Driven No. of Teeth	Driven Pitch Dia. Inches	Center Distance, Inches: 640-8MX	720-8MX	800-8MX	896-8MX	960-8MX	1000-8MX	1040-8MX	1120-8MX	1200-8MX	1224-8MX	1280-8MX	1440-8MX	1600-8MX	1760-8MX
Length Factor*					**0.79**	**0.83**	**0.87**	**0.91**	**0.94**	**0.96**	**0.97**	**1.00**	**1.03**	**1.03**	**1.05**	**1.10**	**1.14**	**1.17**
1.893	28	2.807	53	5.314	6.09	7.69	9.29	11.19	12.46	13.25	14.04	15.62	17.20	17.67	18.77	21.93	25.09	28.24
1.905	42	4.211	80	8.020				7.80	9.09	9.89	10.69	12.29	13.88	14.36	15.47	18.64	21.81	24.97
1.909	22	2.206	42	4.211	7.49	9.08	10.66	12.56	13.82	14.61	15.40	16.98	18.55	19.03	20.13	23.28	26.44	29.59
1.909	33	3.308	63	6.316		6.44	8.05	9.97	11.24	12.03	12.82	14.41	15.99	16.47	17.57	20.73	23.89	27.04
1.914	35	3.509	67	6.717		5.93	7.55	9.47	10.75	11.54	12.33	13.92	15.51	15.98	17.09	20.25	23.41	26.57
1.919	37	3.709	71	7.118			7.04	8.97	10.25	11.05	11.84	13.43	15.02	15.50	16.60	19.77	22.93	26.09
1.920	25	2.506	48	4.812	6.75	8.35	9.94	11.84	13.10	13.89	14.68	16.26	17.84	18.31	19.41	22.57	25.72	28.87
1.923	26	2.607	50	5.013	6.50	8.10	9.69	11.59	12.86	13.65	14.44	16.02	17.59	18.07	19.17	22.33	25.48	28.63
1.923	39	3.910	75	7.519			6.52	8.47	9.76	10.55	11.35	12.94	14.53	15.01	16.12	19.28	22.45	25.61
1.931	29	2.907	56	5.614	5.75	7.36	8.96	10.86	12.13	12.92	13.71	15.29	16.87	17.35	18.45	21.61	24.77	27.92
1.935	31	3.108	60	6.015	5.23	6.86	8.46	10.37	11.64	12.43	13.22	14.81	16.39	16.87	17.97	21.13	24.29	27.44
1.951	41	4.110	80	8.020				7.87	9.16	9.97	10.77	12.36	13.96	14.44	15.55	18.72	21.88	25.04
1.963	27	2.707	53	5.314	6.16	7.77	9.36	11.26	12.53	13.32	14.11	15.69	17.27	17.75	18.85	22.01	25.16	28.32
1.969	32	3.208	63	6.316		6.51	8.12	10.04	11.31	12.10	12.90	14.48	16.06	16.54	17.65	20.81	23.96	27.12
1.971	34	3.409	67	6.717		5.99	7.62	9.54	10.82	11.61	12.41	13.99	15.58	16.06	17.16	20.32	23.48	26.64
1.972	36	3.609	71	7.118			7.11	9.04	10.33	11.12	11.92	13.51	15.09	15.57	16.68	19.84	23.00	26.16
1.972	71	7.118	140	14.036												11.19	14.47	17.69
1.974	38	3.810	75	7.519			6.59	8.54	9.83	10.62	11.42	13.01	14.60	15.08	16.19	19.36	22.52	25.68
2.000	25	2.506	50	5.013	6.57	8.17	9.76	11.67	12.93	13.72	14.51	16.09	17.67	18.15	19.25	22.40	25.56	28.71
2.000	28	2.807	56	5.614	5.82	7.43	9.03	10.94	12.21	13.00	13.78	15.37	16.95	17.42	18.53	21.69	24.84	28.00
2.000	30	3.008	60	6.015	5.30	6.92	8.53	10.44	11.72	12.51	13.30	14.88	16.46	16.94	18.05	21.21	24.36	27.52
2.000	40	4.010	80	8.020				7.94	9.23	10.04	10.84	12.43	14.03	14.51	15.62	18.79	21.96	25.12
2.000	45	4.511	90	9.023					7.95	8.76	9.57	11.19	12.79	13.27	14.39	17.57	20.74	23.91
2.000	56	5.614	112	11.229									9.99	10.49	11.63	14.85	18.05	21.23
2.027	37	3.709	75	7.519			6.66	8.61	9.90	10.70	11.49	13.09	14.68	15.16	16.26	19.43	22.60	25.76
2.029	35	3.509	71	7.118			7.18	9.11	10.40	11.19	11.99	13.58	15.17	15.64	16.75	19.92	23.08	26.24
2.030	33	3.308	67	6.717		6.06	7.69	9.61	10.89	11.69	12.48	14.07	15.65	16.13	17.24	20.40	23.56	26.72
2.032	31	3.108	63	6.316		6.58	8.19	10.11	11.39	12.18	12.97	14.55	16.14	16.62	17.72	20.88	24.04	27.20
2.038	26	2.607	53	5.314	6.23	7.84	9.43	11.34	12.61	13.40	14.18	15.77	17.35	17.82	18.93	22.08	25.24	28.39
2.045	22	2.206	45	4.511	7.23	8.82	10.41	12.31	13.58	14.36	15.15	16.73	18.31	18.78	19.89	23.04	26.19	29.35
2.051	39	3.910	80	8.020				8.00	9.30	10.11	10.91	12.51	14.10	14.58	15.69	18.86	22.03	25.19
2.069	29	2.907	60	6.015	5.37	6.99	8.60	10.52	11.79	12.58	13.37	14.96	16.54	17.02	18.12	21.28	24.44	27.59
2.074	27	2.707	56	5.614	5.88	7.50	9.10	11.01	12.28	13.07	13.86	15.44	17.02	17.50	18.60	21.76	24.92	28.07
2.083	36	3.609	75	7.519			6.72	8.68	9.97	10.77	11.56	13.16	14.75	15.23	16.34	19.51	22.67	25.83
2.088	34	3.409	71	7.118			7.24	9.18	10.47	11.26	12.06	13.65	15.24	15.72	16.82	19.99	23.15	26.31
2.090	67	6.717	140	14.036												11.46	14.74	17.97
2.094	32	3.208	67	6.717		6.13	7.76	9.69	10.96	11.76	12.55	14.14	15.73	16.20	17.31	20.47	23.63	26.79
2.100	30	3.008	63	6.316		6.65	8.26	10.18	11.46	12.25	13.04	14.63	16.21	16.69	17.80	20.96	24.12	27.27
2.105	38	3.810	80	8.020				8.07	9.37	10.18	10.98	12.58	14.17	14.65	15.76	18.94	22.10	25.27
2.113	53	5.314	112	11.229									10.20	10.69	11.83	15.06	18.26	21.45
2.120	25	2.506	53	5.314	6.30	7.91	9.50	11.41	12.68	13.47	14.26	15.84	17.42	17.90	19.00	22.16	25.31	28.47
2.143	28	2.807	60	6.015	5.43	7.06	8.67	10.59	11.86	12.65	13.45	15.03	16.61	17.09	18.20	21.36	24.51	27.67
2.143	35	3.509	75	7.519			6.79	8.75	10.04	10.84	11.64	13.23	14.82	15.30	16.41	19.58	22.75	25.91
2.143	42	4.211	90	9.023					8.15	8.97	9.78	11.40	13.00	13.49	14.60	17.79	20.96	24.13
2.152	33	3.308	71	7.118			7.31	9.25	10.54	11.34	12.13	13.72	15.31	15.79	16.90	20.07	23.23	26.39
2.154	26	2.607	56	5.614	5.95	7.57	9.17	11.08	12.35	13.14	13.93	15.52	17.10	17.57	18.68	21.84	24.99	28.15
2.161	31	3.108	67	6.717		6.19	7.82	9.76	11.04	11.83	12.62	14.21	15.80	16.28	17.38	20.55	23.71	26.87
2.162	37	3.709	80	8.020				8.14	9.44	10.25	11.05	12.65	14.24	14.73	15.84	19.01	22.18	25.34
2.172	29	2.907	63	6.316		6.71	8.33	10.25	11.53	12.32	13.12	14.70	16.29	16.76	17.87	21.03	24.19	27.35
2.182	22	2.206	48	4.812	6.97	8.56	10.15	12.06	13.32	14.11	14.90	16.48	18.06	18.54	19.64	22.80	25.95	29.10
2.195	41	4.110	90	9.023				6.88	8.22	9.03	9.85	11.47	13.07	13.56	14.67	17.86	21.04	24.21
2.206	34	3.409	75	7.519			6.86	8.82	10.11	10.91	11.71	13.30	14.90	15.37	16.48	19.65	22.82	25.98
2.219	32	3.208	71	7.118		5.73	7.38	9.32	10.61	11.41	12.20	13.80	15.39	15.86	16.97	20.14	23.30	26.46
2.222	27	2.707	60	6.015	5.50	7.13	8.74	10.66	11.93	12.73	13.52	15.10	16.69	17.17	18.27	21.43	24.59	27.75
2.222	36	3.609	80	8.020				8.21	9.51	10.31	11.12	12.72	14.32	14.80	15.91	19.08	22.25	25.42
2.222	63	6.316	140	14.036												11.72	15.01	18.25
2.233	30	3.008	67	6.717		6.26	7.89	9.83	11.11	11.90	12.70	14.29	15.87	16.35	17.46	20.62	23.78	26.94
2.240	25	2.506	56	5.614	6.02	7.64	9.24	11.15	12.43	13.22	14.01	15.59	17.17	17.65	18.75	21.91	25.07	28.22
2.240	50	5.013	112	11.229								8.73	10.40	10.89	12.03	15.27	18.48	21.67
2.250	28	2.807	63	6.316	5.13	6.78	8.40	10.33	11.60	12.40	13.19	14.78	16.36	16.84	17.94	21.11	24.27	27.42
2.250	40	4.010	90	9.023				6.95	8.28	9.10	9.92	11.54	13.14	13.63	14.75	17.93	21.11	24.28
2.250	80	8.020	180	18.046														
2.273	22	2.206	50	5.013	6.78	8.39	9.98	11.89	13.16	13.94	14.73	16.31	17.90	18.37	19.47	22.63	25.79	28.94
2.273	33	3.308	75	7.519			6.92	8.89	10.18	10.98	11.78	13.38	14.97	15.45	16.56	19.73	22.89	26.06
2.286	35	3.509	80	8.020			6.29	8.28	9.58	10.38	11.19	12.79	14.39	14.87	15.98	19.16	22.33	25.49
2.290	31	3.108	71	7.118		5.79	7.45	9.39	10.68	11.48	12.27	13.87	15.46	15.94	17.05	20.21	23.38	26.54
2.308	26	2.607	60	6.015	5.57	7.20	8.81	10.73	12.01	12.80	13.59	15.18	16.76	17.24	18.34	21.51	24.66	27.82
2.308	39	3.910	90	9.023				7.01	8.35	9.17	9.98	11.60	13.21	13.70	14.82	18.01	21.18	24.35
2.310	29	2.907	67	6.717		6.33	7.96	9.90	11.18	11.97	12.77	14.36	15.95	16.43	17.53	20.70	23.86	27.02
2.333	27	2.707	63	6.316	5.20	6.85	8.47	10.40	11.67	12.47	13.26	14.85	16.43	16.91	18.02	21.18	24.34	27.50
2.333	48	4.812	112	11.229								8.86	10.53	11.03	12.17	15.41	18.62	21.81
2.333	60	6.015	140	14.036												11.92	15.22	18.46
2.344	32	3.208	75	7.519			6.99	8.95	10.25	11.05	11.85	13.45	15.04	15.52	16.63	19.80	22.97	26.13
2.353	34	3.409	80	8.020			6.35	8.34	9.65	10.45	11.26	12.86	14.46	14.94	16.05	19.23	22.40	25.56
2.367	30	3.008	71	7.118		5.86	7.51	9.46	10.75	11.55	12.35	13.94	15.53	16.01	17.12	20.29	23.45	26.61
2.368	38	3.810	90	9.023				7.08	8.41	9.24	10.05	11.67	13.28	13.77	14.89	18.08	21.26	24.43
2.393	28	2.807	67	6.717		6.39	8.03	9.97	11.25	12.05	12.84	14.43	16.02	16.50	17.61	20.77	23.93	27.09
Length Factor*					**0.79**	**0.83**	**0.87**	**0.91**	**0.94**	**0.96**	**0.97**	**1.00**	**1.03**	**1.03**	**1.05**	**1.10**	**1.14**	**1.17**

* The length correction factor must be used to determine the proper belt width.

SELECTION

8M HT500 Selection Table (Continued)

Speed Ratio	Sprocket Combinations: Driver No. of Teeth	Driver Pitch Dia. Inches	Driven No. of Teeth	Driven Pitch Dia. Inches	Center Distance, Inches: 1792-8MX	2000-8MX	2200-8MX	2240-8MX	2400-8MX	2520-8MX	2600-8MX	2800-8MX	2840-8MX	3048-8MX	3200-8MX	3280-8MX	3600-8MX	4000-8MX	4400-8MX	4480-8MX
Length Factor*					1.18	1.22	1.26	1.26	1.29	1.31	1.32	1.35	1.36	1.38	1.40	1.41	1.45	1.49	1.52	1.53
1.893	28	2.807	53	5.314	28.87	32.97	36.91	37.70	40.85	43.21	44.78	48.73	49.51	53.61	56.60	58.17	64.47	72.35	80.23	81.80
1.905	42	4.211	80	8.020	25.60	29.70	33.64	34.44	37.59	39.95	41.53	45.47	46.26	50.36	53.35	54.93	61.23	69.11	76.99	78.56
1.909	22	2.206	42	4.211	30.22	34.32	38.25	39.04	42.19	44.55	46.13	50.07	50.86	54.95	57.94	59.52	65.82	73.69	81.57	83.14
1.909	33	3.308	63	6.316	27.68	31.78	35.71	36.51	39.66	42.02	43.60	47.54	48.32	52.42	55.41	56.99	63.29	71.17	79.04	80.62
1.914	35	3.509	67	6.717	27.20	31.30	35.24	36.03	39.18	41.54	43.12	47.06	47.85	51.94	54.94	56.51	62.81	70.69	78.57	80.14
1.919	37	3.709	71	7.118	26.72	30.82	34.76	35.55	38.70	41.07	42.64	46.59	47.37	51.47	54.46	56.04	62.34	70.22	78.09	79.67
1.920	25	2.506	48	4.812	29.50	33.60	37.54	38.33	41.48	43.84	45.42	49.36	50.14	54.24	57.23	58.81	65.11	72.98	80.86	82.43
1.923	26	2.607	50	5.013	29.27	33.36	37.30	38.09	41.24	43.60	45.18	49.12	49.91	54.00	56.99	58.57	64.87	72.75	80.62	82.20
1.923	39	3.910	75	7.519	26.24	30.34	34.28	35.07	38.23	40.59	42.17	46.11	46.89	50.99	53.98	55.56	61.86	69.74	77.62	79.19
1.931	29	2.907	56	5.614	28.55	32.65	36.59	37.38	40.53	42.89	44.47	48.41	49.19	53.29	56.28	57.86	64.16	72.03	79.91	81.49
1.935	31	3.108	60	6.015	28.07	32.17	36.11	36.90	40.05	42.41	43.99	47.93	48.72	52.81	55.81	57.38	63.68	71.56	79.44	81.01
1.951	41	4.110	80	8.020	25.67	29.78	33.72	34.51	37.67	40.03	41.61	45.55	46.34	50.44	53.43	55.00	61.31	69.19	77.06	78.64
1.963	27	2.707	53	5.314	28.95	33.04	36.98	37.77	40.92	43.29	44.86	48.80	49.59	53.68	56.68	58.25	64.55	72.43	80.30	81.88
1.969	32	3.208	63	6.316	27.75	31.85	35.79	36.58	39.73	42.10	43.67	47.61	48.40	52.50	55.49	57.06	63.37	71.24	79.12	80.69
1.971	34	3.409	67	6.717	27.27	31.37	35.31	36.10	39.26	41.62	43.20	47.14	47.92	52.02	55.01	56.59	62.89	70.77	78.64	80.22
1.972	36	3.609	71	7.118	26.79	30.90	34.84	35.63	38.78	41.14	42.72	46.66	47.45	51.55	54.54	56.11	62.42	70.29	78.17	79.75
1.972	71	7.118	140	14.036	18.33	22.49	26.46	27.26	30.43	32.81	34.39	38.35	39.14	43.25	46.25	47.83	54.14	62.03	69.92	71.49
1.974	38	3.810	75	7.519	26.31	30.42	34.36	35.15	38.30	40.66	42.24	46.18	46.97	51.07	54.06	55.64	61.94	69.82	77.70	79.27
2.000	25	2.506	50	5.013	29.34	33.44	37.38	38.17	41.32	43.68	45.26	49.20	49.98	54.08	57.07	58.65	64.95	72.82	80.70	82.28
2.000	28	2.807	56	5.614	28.63	32.73	36.66	37.45	40.61	42.97	44.54	48.49	49.27	53.37	56.36	57.93	64.24	72.11	79.99	81.56
2.000	30	3.008	60	6.015	28.15	32.25	36.19	36.98	40.13	42.49	44.07	48.01	48.80	52.89	55.88	57.46	63.76	71.64	79.51	81.09
2.000	40	4.010	80	8.020	25.75	29.85	33.80	34.59	37.74	40.11	41.68	45.63	46.41	50.51	53.50	55.08	61.38	69.26	77.14	78.72
2.000	45	4.511	90	9.023	24.54	28.65	32.60	33.39	36.55	38.91	40.49	44.43	45.22	49.32	52.31	53.89	60.19	68.07	75.95	77.53
2.000	56	5.614	112	11.229	21.87	25.99	29.94	30.74	33.90	36.27	37.85	41.80	42.58	46.69	49.68	51.26	57.57	65.45	73.33	74.91
2.027	37	3.709	75	7.519	26.39	30.49	34.43	35.23	38.38	40.74	42.32	46.26	47.05	51.15	54.14	55.71	62.02	69.90	77.77	79.35
2.029	35	3.509	71	7.118	26.87	30.97	34.91	35.70	38.86	41.22	42.80	46.74	47.52	51.62	54.61	56.19	62.49	70.37	78.25	79.82
2.030	33	3.308	67	6.717	27.35	31.45	35.39	36.18	39.33	41.70	43.27	47.22	48.00	52.10	55.09	56.67	62.97	70.85	78.72	80.30
2.032	31	3.108	63	6.316	27.83	31.93	35.87	36.66	39.81	42.17	43.75	47.69	48.48	52.57	55.57	57.14	63.44	71.32	79.20	80.77
2.038	26	2.607	53	5.314	29.02	33.12	37.06	37.85	41.00	43.36	44.94	48.88	49.67	53.76	56.75	58.33	64.63	72.51	80.38	81.96
2.045	22	2.206	45	4.511	29.98	34.07	38.01	38.80	41.95	44.31	45.89	49.83	50.62	54.71	57.70	59.28	65.58	73.46	81.33	82.91
2.051	39	3.910	80	8.020	25.82	29.93	33.87	34.66	37.82	40.18	41.76	45.70	46.49	50.59	53.58	55.16	61.46	69.34	77.22	78.79
2.069	29	2.907	60	6.015	28.22	32.33	36.26	37.06	40.21	42.57	44.15	48.09	48.87	52.97	55.96	57.54	63.84	71.72	79.59	81.17
2.074	27	2.707	56	5.614	28.70	32.80	36.74	37.53	40.68	43.05	44.62	48.56	49.35	53.44	56.44	58.01	64.31	72.19	80.07	81.64
2.083	36	3.609	75	7.519	26.46	30.57	34.51	35.30	38.46	40.82	42.40	46.34	47.12	51.22	54.21	55.79	62.09	69.97	77.85	79.43
2.088	34	3.409	71	7.118	26.94	31.05	34.99	35.78	38.93	41.30	42.87	46.82	47.60	51.70	54.69	56.27	62.57	70.45	78.33	79.90
2.090	67	6.717	140	14.036	18.61	22.78	26.75	27.55	30.73	33.10	34.69	38.65	39.44	43.55	46.55	48.13	54.44	62.33	70.22	71.80
2.094	32	3.208	67	6.717	27.42	31.53	35.47	36.26	39.41	41.77	43.35	47.29	48.08	52.18	55.17	56.74	63.05	70.92	78.80	80.38
2.100	30	3.008	63	6.316	27.90	32.00	35.94	36.73	39.89	42.25	43.83	47.77	48.55	52.65	55.64	57.22	63.52	71.40	79.27	80.85
2.105	38	3.810	80	8.020	25.90	30.00	33.95	34.74	37.90	40.26	41.84	45.78	46.57	50.67	53.66	55.23	61.54	69.42	77.30	78.87
2.113	53	5.314	112	11.229	22.08	26.21	30.17	30.96	34.12	36.49	38.07	42.02	42.81	46.91	49.91	51.49	57.80	65.68	73.56	75.14
2.120	25	2.506	53	5.314	29.10	33.20	37.14	37.93	41.08	43.44	45.02	48.96	49.74	53.84	56.83	58.41	64.71	72.58	80.46	82.04
2.143	28	2.807	60	6.015	28.30	32.40	36.34	37.13	40.28	42.65	44.22	48.16	48.95	53.05	56.04	57.61	63.92	71.79	79.67	81.25
2.143	35	3.509	75	7.519	26.54	30.64	34.59	35.38	38.53	40.89	42.47	46.42	47.20	51.30	54.29	55.87	62.17	70.05	77.93	79.50
2.143	42	4.211	90	9.023	24.76	28.88	32.82	33.61	36.77	39.14	40.71	44.66	45.45	49.55	52.54	54.12	60.42	68.30	76.18	77.76
2.152	33	3.308	71	7.118	27.02	31.12	35.06	35.86	39.01	41.37	42.95	46.89	47.68	51.78	54.77	56.34	62.65	70.53	78.40	79.98
2.154	26	2.607	56	5.614	28.78	32.88	36.82	37.61	40.76	43.12	44.70	48.64	49.43	53.52	56.51	58.09	64.39	72.27	80.14	81.72
2.161	31	3.108	67	6.717	27.50	31.60	35.54	36.33	39.49	41.85	43.43	47.37	48.15	52.25	55.24	56.82	63.12	71.00	78.88	80.45
2.162	37	3.709	80	8.020	25.97	30.08	34.02	34.82	37.97	40.34	41.91	45.86	46.64	50.74	53.73	55.31	61.62	69.49	77.37	78.95
2.172	29	2.907	63	6.316	27.98	32.08	36.02	36.81	39.96	42.33	43.90	47.85	48.63	52.73	55.72	57.30	63.60	71.48	79.35	80.93
2.182	22	2.206	48	4.812	29.73	33.83	37.77	38.56	41.71	44.07	45.65	49.59	50.38	54.47	57.46	59.04	65.34	73.22	81.09	82.67
2.195	41	4.110	90	9.023	24.84	28.95	32.90	33.69	36.85	39.21	40.79	44.74	45.52	49.62	52.62	54.19	60.50	68.38	76.26	77.84
2.206	34	3.409	75	7.519	26.61	30.72	34.66	35.45	38.61	40.97	42.55	46.49	47.28	51.38	54.37	55.94	62.25	70.13	78.01	79.58
2.219	32	3.208	71	7.118	27.09	31.20	35.14	35.93	39.09	41.45	43.03	46.97	47.75	51.85	54.85	56.42	62.72	70.60	78.48	80.06
2.222	27	2.707	60	6.015	28.38	32.48	36.42	37.21	40.36	42.72	44.30	48.24	49.03	53.12	56.12	57.69	63.99	71.87	79.75	81.32
2.222	36	3.609	80	8.020	26.05	30.16	34.10	34.89	38.05	40.41	41.99	45.93	46.72	50.82	53.81	55.39	61.69	69.57	77.45	79.03
2.222	63	6.316	140	14.036	18.89	23.06	27.04	27.84	31.02	33.40	34.98	38.94	39.73	43.85	46.85	48.43	54.74	62.64	70.52	72.10
2.233	30	3.008	67	6.717	27.57	31.68	35.62	36.41	39.56	41.93	43.50	47.45	48.23	52.33	55.32	56.90	63.20	71.08	78.96	80.53
2.240	25	2.506	56	5.614	28.86	32.96	36.89	37.69	40.84	43.20	44.78	48.72	49.50	53.60	56.59	58.17	64.47	72.35	80.22	81.80
2.240	50	5.013	112	11.229	22.30	26.43	30.39	31.18	34.35	36.72	38.30	42.25	43.04	47.14	50.14	51.72	58.03	65.91	73.79	75.37
2.250	28	2.807	63	6.316	28.05	32.16	36.10	36.89	40.04	42.40	43.98	47.92	48.71	52.81	55.80	57.37	63.68	71.55	79.43	81.01
2.250	40	4.010	90	9.023	24.91	29.03	32.97	33.77	36.92	39.29	40.87	44.81	45.60	49.70	52.69	54.27	60.58	68.46	76.34	77.91
2.250	80	8.020	180	18.046	13.89	18.20	22.27	23.08	26.29	28.69	30.29	34.28	35.07	39.21	42.22	43.81	50.14	58.05	65.95	67.53
2.273	22	2.206	50	5.013	29.57	33.67	37.61	38.40	41.55	43.91	45.49	49.43	50.22	54.31	57.30	58.88	65.18	73.06	80.93	82.51
2.273	33	3.308	75	7.519	26.69	30.79	34.74	35.53	38.68	41.05	42.62	46.57	47.35	51.45	54.45	56.02	62.33	70.20	78.08	79.66
2.286	35	3.509	80	8.020	26.12	30.23	34.18	34.97	38.12	40.49	42.06	46.01	46.80	50.90	53.89	55.46	61.77	69.65	77.53	79.10
2.290	31	3.108	71	7.118	27.17	31.27	35.22	36.01	39.16	41.53	43.10	47.05	47.83	51.93	54.92	56.50	62.80	70.68	78.56	80.13
2.308	26	2.607	60	6.015	28.45	32.55	36.49	37.28	40.44	42.80	44.38	48.32	49.10	53.20	56.19	57.77	64.07	71.95	79.83	81.40
2.308	39	3.910	90	9.023	24.99	29.10	33.05	33.84	37.00	39.36	40.94	44.89	45.68	49.78	52.77	54.35	60.65	68.53	76.41	77.99
2.310	29	2.907	67	6.717	27.65	31.75	35.70	36.49	39.64	42.00	43.58	47.52	48.31	52.41	55.40	56.97	63.28	71.16	79.03	80.61
2.333	27	2.707	63	6.316	28.13	32.23	36.17	36.96	40.12	42.48	44.06	48.00	48.78	52.88	55.87	57.45	63.75	71.63	79.51	81.08
2.333	48	4.812	112	11.229	22.45	26.58	30.54	31.33	34.50	36.87	38.45	42.40	43.19	47.29	50.29	51.87	58.18	66.06	73.95	75.52
2.333	60	6.015	140	14.036	19.10	23.28	27.26	28.06	31.24	33.62	35.20	39.17	39.96	44.07	47.07	48.65	54.97	62.86	70.75	72.33
2.344	32	3.208	75	7.519	26.76	30.87	34.81	35.60	38.76	41.12	42.70	46.65	47.43	51.53	54.52	56.10	62.40	70.28	78.16	79.74
2.353	34	3.409	80	8.020	26.20	30.31	34.25	35.04	38.20	40.56	42.14	46.09	46.87	50.97	53.96	55.54	61.85	69.73	77.60	79.18
2.367	30	3.008	71	7.118	27.24	31.35	35.29	36.08	39.24	41.60	43.18	47.12	47.91	52.01	55.00	56.57	62.88	70.76	78.64	80.21
2.368	38	3.810	90	9.023	25.06	29.17	33.12	33.92	37.07	39.44	41.02	44.97	45.75	49.85	52.85	54.42	60.73	68.61	76.49	78.07
2.393	28	2.807	67	6.717	27.73	31.83	35.77	36.56	39.72	42.08	43.66	47.60	48.39	52.48	55.48	57.05	63.35	71.23	79.11	80.69
Length Factor*					1.18	1.22	1.26	1.26	1.29	1.31	1.32	1.35	1.36	1.38	1.40	1.41	1.45	1.49	1.52	1.53

Center distance is greater than eight times the small sprocket and the large sprocket is not flanged. See Engineering Section for details.
* The length correction factor must be used to determine the proper belt width.

8M HT500 Selection Table

Speed Ratio	Sprocket Combinations: Driver No. of Teeth	Driver Pitch Dia. Inches	Driven No. of Teeth	Driven Pitch Dia. Inches	Center Distance, Inches: 640-8MX	720-8MX	800-8MX	896-8MX	960-8MX	1000-8MX	1040-8MX	1120-8MX	1200-8MX	1224-8MX	1280-8MX	1440-8MX	1600-8MX	1760-8MX
Length Factor*					0.79	0.83	0.87	0.91	0.94	0.96	0.97	1.00	1.03	1.03	1.05	1.10	1.14	1.17
2.400	25	2.506	60	6.015	5.63	7.27	8.88	10.80	12.08	12.87	13.66	15.25	16.84	17.31	18.42	21.58	24.74	27.90
2.400	75	7.519	180	18.046														13.53
2.409	22	2.206	53	5.314	6.51	8.12	9.72	11.63	12.90	13.69	14.48	16.06	17.65	18.12	19.23	22.38	25.54	28.70
2.419	31	3.108	75	7.519			7.06	9.02	10.32	11.12	11.92	13.52	15.11	15.59	16.70	19.88	23.04	26.21
2.423	26	2.607	63	6.316	5.26	6.92	8.54	10.47	11.75	12.54	13.33	14.92	16.51	16.99	18.09	21.26	24.42	27.57
2.424	33	3.308	80	8.020			6.42	8.41	9.72	10.52	11.33	12.93	14.53	15.01	16.13	19.30	22.47	25.64
2.432	37	3.709	90	9.023				7.14	8.48	9.30	10.12	11.74	13.36	13.84	14.96	18.15	21.33	24.50
2.448	29	2.907	71	7.118		5.92	7.58	9.53	10.82	11.62	12.42	14.01	15.60	16.08	17.19	20.36	23.53	26.69
2.481	27	2.707	67	6.717		6.46	8.10	10.04	11.32	12.12	12.91	14.50	16.09	16.57	17.68	20.85	24.01	27.17
2.489	45	4.511	112	11.229								9.05	10.73	11.23	12.37	15.62	18.83	22.03
2.500	30	3.008	75	7.519			7.12	9.09	10.39	11.19	11.99	13.59	15.18	15.66	16.78	19.95	23.12	26.28
2.500	32	3.208	80	8.020			6.48	8.48	9.78	10.59	11.40	13.00	14.60	15.08	16.20	19.38	22.55	25.71
2.500	36	3.609	90	9.023				7.20	8.55	9.37	10.19	11.81	13.43	13.91	15.03	18.22	21.40	24.57
2.500	56	5.614	140	14.036												12.18	15.49	18.74
2.520	25	2.506	63	6.316	5.33	6.98	8.61	10.54	11.82	12.61	13.41	15.00	16.58	17.06	18.17	21.33	24.49	27.65
2.535	71	7.118	180	18.046														13.78
2.536	28	2.807	71	7.118		5.99	7.65	9.60	10.89	11.69	12.49	14.08	15.68	16.16	17.27	20.44	23.60	26.76
2.545	22	2.206	56	5.614	6.22	7.85	9.45	11.37	12.64	13.43	14.23	15.81	17.39	17.87	18.98	22.14	25.30	28.45
2.571	35	3.509	90	9.023				7.27	8.61	9.44	10.25	11.88	13.49	13.98	15.10	18.29	21.48	24.65
2.577	26	2.607	67	6.717		6.53	8.17	10.11	11.39	12.19	12.98	14.58	16.17	16.64	17.75	20.92	24.08	27.24
2.581	31	3.108	80	8.020			6.54	8.54	9.85	10.66	11.47	13.07	14.67	15.16	16.27	19.45	22.62	25.79
2.586	29	2.907	75	7.519			7.19	9.16	10.46	11.26	12.06	13.66	15.26	15.74	16.85	20.02	23.19	26.36
2.630	27	2.707	71	7.118		6.05	7.72	9.67	10.96	11.76	12.56	14.16	15.75	16.23	17.34	20.51	23.68	26.84
2.642	53	5.314	140	14.036												12.37	15.69	18.94
2.647	34	3.409	90	9.023				7.33	8.68	9.50	10.32	11.95	13.56	14.05	15.17	18.37	21.55	24.72
2.667	30	3.008	80	8.020			6.61	8.61	9.92	10.73	11.54	13.14	14.75	15.23	16.34	19.52	22.70	25.86
2.667	42	4.211	112	11.229								9.24	10.92	11.43	12.58	15.83	19.04	22.24
2.679	28	2.807	75	7.519			7.25	9.23	10.53	11.33	12.13	13.73	15.33	15.81	16.92	20.10	23.27	26.43
2.680	25	2.506	67	6.717		6.59	8.24	10.18	11.46	12.26	13.06	14.65	16.24	16.72	17.83	21.00	24.16	27.32
2.687	67	6.717	180	18.046														14.04
2.727	22	2.206	60	6.015	5.83	7.47	9.09	11.02	12.30	13.09	13.88	15.47	17.06	17.53	18.64	21.81	24.97	28.12
2.727	33	3.308	90	9.023				7.40	8.74	9.57	10.39	12.02	13.63	14.12	15.24	18.44	21.62	24.80
2.731	26	2.607	71	7.118		6.12	7.78	9.74	11.03	11.83	12.63	14.23	15.82	16.30	17.41	20.58	23.75	26.91
2.732	41	4.110	112	11.229								9.31	10.99	11.49	12.64	15.90	19.12	22.31
2.759	29	2.907	80	8.020			6.67	8.68	9.99	10.80	11.61	13.21	14.82	15.30	16.41	19.60	22.77	25.94
2.778	27	2.707	75	7.519		5.62	7.32	9.30	10.59	11.40	12.20	13.80	15.40	15.88	16.99	20.17	23.34	26.50
2.800	40	4.010	112	11.229								9.37	11.06	11.56	12.71	15.97	19.19	22.38
2.800	50	5.013	140	14.036												12.56	15.89	19.15
2.800	80	8.020	224	22.457														
2.813	32	3.208	90	9.023				7.46	8.81	9.64	10.46	12.09	13.70	14.19	15.31	18.51	21.69	24.87
2.840	25	2.506	71	7.118		6.18	7.85	9.81	11.10	11.90	12.70	14.30	15.89	16.37	17.48	20.66	23.82	26.99
2.857	28	2.807	80	8.020			6.74	8.75	10.06	10.87	11.67	13.28	14.89	15.37	16.49	19.67	22.84	26.01
2.857	63	6.316	180	18.046														14.29
2.864	22	2.206	63	6.316	5.52	7.19	8.82	10.75	12.03	12.83	13.62	15.21	16.80	17.28	18.39	21.55	24.72	27.88
2.872	39	3.910	112	11.229								9.44	11.12	11.62	12.78	16.04	19.26	22.46
2.885	26	2.607	75	7.519		5.68	7.38	9.36	10.66	11.47	12.27	13.87	15.47	15.95	17.07	20.24	23.41	26.58
2.903	31	3.108	90	9.023				7.52	8.87	9.70	10.52	12.16	13.77	14.26	15.38	18.58	21.77	24.94
2.917	48	4.812	140	14.036												12.69	16.02	19.29
2.947	38	3.810	112	11.229								9.50	11.19	11.69	12.84	16.10	19.33	22.53
2.963	27	2.707	80	8.020			6.80	8.81	10.12	10.94	11.74	13.35	14.96	15.44	16.56	19.74	22.92	26.08
2.987	75	7.519	224	22.457														
3.000	25	2.506	75	7.519		5.75	7.45	9.43	10.73	11.54	12.34	13.95	15.54	16.02	17.14	20.32	23.49	26.65
3.000	30	3.008	90	9.023				7.59	8.94	9.77	10.59	12.22	13.84	14.33	15.45	18.65	21.84	25.01
3.000	60	6.015	180	18.046														14.48
3.027	37	3.709	112	11.229							7.81	9.56	11.25	11.76	12.91	16.17	19.40	22.60
3.045	22	2.206	67	6.717	5.08	6.79	8.44	10.39	11.67	12.47	13.27	14.87	16.46	16.94	18.05	21.22	24.38	27.54
3.077	26	2.607	80	8.020			6.86	8.88	10.19	11.00	11.81	13.42	15.03	15.51	16.63	19.81	22.99	26.16
3.103	29	2.907	90	9.023				7.65	9.01	9.84	10.66	12.29	13.91	14.40	15.52	18.72	21.91	25.09
3.111	36	3.609	112	11.229							7.88	9.63	11.32	11.82	12.98	16.24	19.47	22.67
3.111	45	4.511	140	14.036												12.89	16.22	19.49
3.155	71	7.118	224	22.457														
3.200	25	2.506	80	8.020			6.93	8.94	10.26	11.07	11.88	13.50	15.10	15.58	16.70	19.89	23.06	26.23
3.200	35	3.509	112	11.229							7.94	9.69	11.38	11.89	13.04	16.31	19.54	22.74
3.214	28	2.807	90	9.023				7.71	9.07	9.90	10.73	12.36	13.98	14.47	15.59	18.80	21.98	25.16
3.214	56	5.614	180	18.046														14.73
3.227	22	2.206	71	7.118		6.37	8.05	10.01	11.31	12.11	12.91	14.51	16.11	16.59	17.70	20.88	24.05	27.21
3.294	34	3.409	112	11.229							8.00	9.75	11.45	11.95	13.11	16.38	19.61	22.81
3.333	27	2.707	90	9.023				7.78	9.14	9.97	10.79	12.43	14.05	14.54	15.66	18.87	22.06	25.23
3.333	42	4.211	140	14.036											9.57	13.08	16.42	19.70
3.343	67	6.717	224	22.457														
3.394	33	3.308	112	11.229							8.06	9.82	11.51	12.02	13.18	16.45	19.68	22.88
3.396	53	5.314	180	18.046														14.92
3.409	22	2.206	75	7.519		5.93	7.65	9.63	10.94	11.75	12.55	14.16	15.76	16.24	17.35	20.53	23.71	26.88
3.415	41	4.110	140	14.036											9.63	13.14	16.49	19.77
3.462	26	2.607	90	9.023				7.84	9.20	10.03	10.86	12.50	14.12	14.61	15.73	18.94	22.13	25.31
3.500	32	3.208	112	11.229							8.12	9.88	11.58	12.08	13.24	16.52	19.75	22.95
3.500	40	4.010	140	14.036											9.69	13.21	16.56	19.83
Length Factor*					0.79	0.83	0.87	0.91	0.94	0.96	0.97	1.00	1.03	1.03	1.05	1.10	1.14	1.17

Center distance is greater than eight times the small sprocket and the large sprocket is not flanged. See Engineering Section for details.
* The length correction factor must be used to determine the proper belt width.

SELECTION

8M HT500 Selection Table (Continued)

Speed Ratio	Sprocket Combinations: Driver No. of Teeth	Driver Pitch Dia. Inches	Driven No. of Teeth	Driven Pitch Dia. Inches	Center Distance, Inches: 1792-8MX	2000-8MX	2200-8MX	2240-8MX	2400-8MX	2520-8MX	2600-8MX	2800-8MX	2840-8MX	3048-8MX	3200-8MX	3280-8MX	3600-8MX	4000-8MX	4400-8MX	4480-8MX
Length Factor*					1.18	1.22	1.26	1.26	1.29	1.31	1.32	1.35	1.36	1.38	1.40	1.41	1.45	1.49	1.52	1.53
2.400	25	2.506	60	6.015	28.53	32.63	36.57	37.36	40.51	42.88	44.45	48.40	49.18	53.28	56.27	57.85	64.15	72.03	79.90	81.48
2.400	75	7.519	180	18.046	14.21	18.54	22.61	23.42	26.64	29.05	30.65	34.64	35.43	39.57	42.59	44.17	50.51	58.42	66.33	67.91
2.409	22	2.206	53	5.314	29.33	33.43	37.37	38.16	41.31	43.67	45.25	49.19	49.97	54.07	57.06	58.64	64.94	72.82	80.69	82.27
2.419	31	3.108	75	7.519	26.84	30.94	34.89	35.68	38.84	41.20	42.78	46.72	47.51	51.61	54.60	56.18	62.48	70.36	78.24	79.81
2.423	26	2.607	63	6.316	28.21	32.31	36.25	37.04	40.19	42.56	44.13	48.08	48.86	52.96	55.95	57.53	63.83	71.71	79.59	81.16
2.424	33	3.308	80	8.020	26.27	30.38	34.33	35.12	38.28	40.64	42.22	46.16	46.95	51.05	54.04	55.62	61.92	69.80	77.68	79.26
2.432	37	3.709	90	9.023	25.13	29.25	33.20	33.99	37.15	39.52	41.09	45.04	45.83	49.93	52.92	54.50	60.81	68.69	76.57	78.15
2.448	29	2.907	71	7.118	27.32	31.43	35.37	36.16	39.32	41.68	43.26	47.20	47.99	52.08	55.08	56.65	62.96	70.84	78.71	80.29
2.481	27	2.707	67	6.717	27.80	31.91	35.85	36.64	39.79	42.16	43.73	47.68	48.46	52.56	55.55	57.13	63.43	71.31	79.19	80.76
2.489	45	4.511	112	11.229	22.66	26.80	30.76	31.55	34.72	37.09	38.67	42.63	43.41	47.52	50.52	52.09	58.41	66.29	74.18	75.75
2.500	30	3.008	75	7.519	26.91	31.02	34.96	35.76	38.91	41.28	42.85	46.80	47.58	51.68	54.68	56.25	62.56	70.44	78.31	79.89
2.500	32	3.208	80	8.020	26.35	30.46	34.40	35.19	38.35	40.72	42.29	46.24	47.02	51.12	54.12	55.69	62.00	69.88	77.76	79.34
2.500	36	3.609	90	9.023	25.21	29.32	33.27	34.07	37.23	39.59	41.17	45.12	45.90	50.01	53.00	54.58	60.88	68.77	76.65	78.22
2.500	56	5.614	140	14.036	19.38	23.56	27.55	28.35	31.53	33.91	35.50	39.46	40.25	44.37	47.37	48.95	55.27	63.17	71.06	72.63
2.520	25	2.506	63	6.316	28.28	32.39	36.33	37.12	40.27	42.63	44.21	48.15	48.94	53.04	56.03	57.60	63.91	71.79	79.66	81.24
2.535	71	7.118	180	18.046	14.47	18.81	22.89	23.70	26.92	29.33	30.93	34.93	35.72	39.86	42.88	44.47	50.81	58.72	66.63	68.21
2.536	28	2.807	71	7.118	27.40	31.50	35.44	36.24	39.39	41.75	43.33	47.28	48.06	52.16	55.15	56.73	63.03	70.91	78.79	80.37
2.545	22	2.206	56	5.614	29.08	33.18	37.12	37.91	41.07	43.43	45.01	48.95	49.73	53.83	56.82	58.40	64.70	72.58	80.46	82.03
2.571	35	3.509	90	9.023	25.28	29.40	33.35	34.14	37.30	39.67	41.25	45.19	45.98	50.08	53.08	54.65	60.96	68.84	76.72	78.30
2.577	26	2.607	67	6.717	27.88	31.98	35.92	36.71	39.87	42.23	43.81	47.75	48.54	52.64	55.63	57.21	63.51	71.39	79.27	80.84
2.581	31	3.108	80	8.020	26.42	30.53	34.48	35.27	38.43	40.79	42.37	46.31	47.10	51.20	54.19	55.77	62.08	69.96	77.84	79.41
2.586	29	2.907	75	7.519	26.99	31.10	35.04	35.83	38.99	41.35	42.93	46.87	47.66	51.76	54.75	56.33	62.63	70.51	78.39	79.97
2.630	27	2.707	71	7.118	27.47	31.58	35.52	36.31	39.47	41.83	43.41	47.35	48.14	52.24	55.23	56.81	63.11	70.99	78.87	80.44
2.642	53	5.314	140	14.036	19.59	23.77	27.76	28.56	31.75	34.13	35.72	39.68	40.47	44.59	47.59	49.17	55.50	63.39	71.28	72.86
2.647	34	3.409	90	9.023	25.36	29.47	33.42	34.22	37.38	39.74	41.32	45.27	46.06	50.16	53.15	54.73	61.04	68.92	76.80	78.38
2.667	30	3.008	80	8.020	26.50	30.61	34.55	35.34	38.50	40.87	42.44	46.39	47.18	51.28	54.27	55.85	62.15	70.03	77.91	79.49
2.667	42	4.211	112	11.229	22.88	27.02	30.98	31.77	34.94	37.31	38.90	42.85	43.64	47.74	50.74	52.32	58.63	66.52	74.41	75.98
2.679	28	2.807	75	7.519	27.06	31.17	35.12	35.91	39.06	41.43	43.01	46.95	47.74	51.84	54.83	56.41	62.71	70.59	78.47	80.05
2.680	25	2.506	67	6.717	27.95	32.06	36.00	36.79	39.95	42.31	43.89	47.83	48.62	52.71	55.71	57.28	63.59	71.47	79.34	80.92
2.687	67	6.717	180	18.046	14.72	19.07	23.16	23.97	27.20	29.61	31.22	35.21	36.01	40.15	43.17	44.76	51.10	59.02	66.93	68.51
2.727	22	2.206	60	6.015	28.76	32.86	36.80	37.59	40.74	43.11	44.68	48.63	49.41	53.51	56.50	58.08	64.38	72.26	80.14	81.71
2.727	33	3.308	90	9.023	25.43	29.55	33.50	34.29	37.45	39.82	41.40	45.35	46.13	50.23	53.23	54.81	61.11	69.00	76.88	78.45
2.731	26	2.607	71	7.118	27.54	31.65	35.60	36.39	39.54	41.91	43.48	47.43	48.21	52.31	55.31	56.88	63.19	71.07	78.94	80.52
2.732	41	4.110	112	11.229	22.95	27.09	31.05	31.85	35.02	37.39	38.97	42.93	43.71	47.82	50.82	52.40	58.71	66.60	74.48	76.06
2.759	29	2.907	80	8.020	26.57	30.68	34.63	35.42	38.58	40.94	42.52	46.47	47.25	51.35	54.35	55.92	62.23	70.11	77.99	79.57
2.778	27	2.707	75	7.519	27.14	31.25	35.19	35.98	39.14	41.50	43.08	47.03	47.81	51.91	54.91	56.48	62.79	70.67	78.55	80.12
2.800	40	4.010	112	11.229	23.02	27.16	31.13	31.92	35.09	37.46	39.04	43.00	43.79	47.90	50.89	52.47	58.79	66.67	74.56	76.14
2.800	50	5.013	140	14.036	19.80	23.98	27.98	28.78	31.97	34.35	35.94	39.90	40.69	44.81	47.82	49.40	55.72	63.62	71.51	73.09
2.800	80	8.020	224	22.457			17.89	18.75	22.12	24.60	26.24	30.32	31.13	35.32	38.37	39.97	46.37	54.32	62.26	63.84
2.813	32	3.208	90	9.023	25.50	29.62	33.57	34.37	37.53	39.89	41.47	45.42	46.21	50.31	53.30	54.88	61.19	69.07	76.95	78.53
2.840	25	2.506	71	7.118	27.62	31.73	35.67	36.46	39.62	41.98	43.56	47.51	48.29	52.39	55.38	56.96	63.26	71.14	79.02	80.60
2.857	28	2.807	80	8.020	26.64	30.76	34.70	35.50	38.65	41.02	42.60	46.54	47.33	51.43	54.42	56.00	62.31	70.19	78.07	79.64
2.857	63	6.316	180	18.046	14.98	19.34	23.43	24.25	27.48	29.89	31.50	35.50	36.30	40.44	43.46	45.05	51.40	59.32	67.23	68.81
2.864	22	2.206	63	6.316	28.51	32.61	36.55	37.35	40.50	42.86	44.44	48.38	49.17	53.27	56.26	57.84	64.14	72.02	79.90	81.47
2.872	39	3.910	112	11.229	23.09	27.23	31.20	32.00	35.16	37.54	39.12	43.07	43.86	47.97	50.97	52.55	58.86	66.75	74.64	76.21
2.885	26	2.607	75	7.519	27.21	31.32	35.27	36.06	39.22	41.58	43.16	47.10	47.89	51.99	54.98	56.56	62.86	70.74	78.62	80.20
2.903	31	3.108	90	9.023	25.58	29.69	33.65	34.44	37.60	39.97	41.55	45.50	46.28	50.39	53.38	54.96	61.27	69.15	77.03	78.61
2.917	48	4.812	140	14.036	19.94	24.12	28.12	28.92	32.11	34.49	36.08	40.05	40.84	44.96	47.96	49.55	55.87	63.77	71.66	73.24
2.947	38	3.810	112	11.229	23.17	27.31	31.27	32.07	35.24	37.61	39.19	43.15	43.94	48.05	51.04	52.62	58.94	66.83	74.71	76.29
2.963	27	2.707	80	8.020	26.72	30.83	34.78	35.57	38.73	41.09	42.67	46.62	47.41	51.51	54.50	56.08	62.38	70.26	78.14	79.72
2.987	75	7.519	224	22.457			18.21	19.07	22.45	24.93	26.58	30.66	31.47	35.67	38.72	40.33	46.72	54.69	62.63	64.21
3.000	25	2.506	75	7.519	27.29	31.40	35.34	36.13	39.29	41.66	43.23	47.18	47.97	52.07	55.06	56.64	62.94	70.82	78.70	80.28
3.000	30	3.008	90	9.023	25.65	29.77	33.72	34.51	37.68	40.04	41.62	45.57	46.36	50.46	53.46	55.03	61.34	69.23	77.11	78.68
3.000	60	6.015	180	18.046	15.17	19.54	23.64	24.45	27.69	30.10	31.71	35.71	36.51	40.66	43.68	45.27	51.62	59.54	67.45	69.03
3.027	37	3.709	112	11.229	23.24	27.38	31.35	32.14	35.31	37.68	39.27	43.22	44.01	48.12	51.12	52.70	59.01	66.90	74.79	76.37
3.045	22	2.206	67	6.717	28.18	32.28	36.23	37.02	40.17	42.54	44.11	48.06	48.84	52.94	55.94	57.51	63.82	71.70	79.57	81.15
3.077	26	2.607	80	8.020	26.79	30.90	34.85	35.65	38.80	41.17	42.75	46.70	47.48	51.58	54.58	56.15	62.46	70.34	78.22	79.80
3.103	29	2.907	90	9.023	25.72	29.84	33.80	34.59	37.75	40.12	41.70	45.65	46.43	50.54	53.53	55.11	61.42	69.30	77.18	78.76
3.111	36	3.609	112	11.229	23.31	27.45	31.42	32.22	35.39	37.76	39.34	43.30	44.09	48.20	51.19	52.77	59.09	66.98	74.86	76.44
3.111	45	4.511	140	14.036	20.14	24.34	28.34	29.14	32.33	34.71	36.30	40.27	41.06	45.18	48.19	49.77	56.10	64.00	71.89	73.47
3.155	71	7.118	224	22.457			18.46	19.32	22.71	25.20	26.85	30.94	31.75	35.95	39.01	40.61	47.01	54.98	62.92	64.51
3.200	25	2.506	80	8.020	26.87	30.98	34.93	35.72	38.88	41.25	42.82	46.77	47.56	51.66	54.65	56.23	62.54	70.42	78.30	79.88
3.200	35	3.509	112	11.229	23.38	27.52	31.49	32.29	35.46	37.83	39.42	43.37	44.16	48.27	51.27	52.85	59.16	67.05	74.94	76.52
3.214	28	2.807	90	9.023	25.80	29.92	33.87	34.66	37.83	40.19	41.77	45.72	46.51	50.61	53.61	55.19	61.50	69.38	77.26	78.84
3.214	56	5.614	180	18.046	15.42	19.80	23.91	24.73	27.97	30.38	31.99	36.00	36.80	40.94	43.97	45.56	51.91	59.83	67.75	69.33
3.227	22	2.206	71	7.118	27.84	31.95	35.90	36.69	39.85	42.21	43.79	47.73	48.52	52.62	55.61	57.19	63.49	71.37	79.25	80.83
3.294	34	3.409	112	11.229	23.45	27.60	31.57	32.36	35.53	37.91	39.49	43.45	44.24	48.35	51.34	52.92	59.24	67.13	75.02	76.59
3.333	27	2.707	90	9.023	25.87	29.99	33.95	34.74	37.90	40.27	41.85	45.80	46.59	50.69	53.68	55.26	61.57	69.46	77.34	78.91
3.333	42	4.211	140	14.036	20.35	24.55	28.55	29.35	32.54	34.93	36.52	40.49	41.28	45.40	48.41	49.99	56.32	64.22	72.12	73.70
3.343	67	6.717	224	22.457			18.71	19.58	22.97	25.47	27.12	31.21	32.02	36.23	39.29	40.89	47.30	55.27	63.21	64.80
3.394	33	3.308	112	11.229	23.52	27.67	31.64	32.44	35.61	37.98	39.56	43.52	44.31	48.42	51.42	53.00	59.32	67.21	75.09	76.67
3.396	53	5.314	180	18.046	15.61	20.00	24.11	24.93	28.18	30.59	32.20	36.21	37.01	41.16	44.18	45.77	52.13	60.06	67.97	69.55
3.409	22	2.206	75	7.519	27.51	31.62	35.57	36.36	39.52	41.88	43.46	47.41	48.19	52.29	55.29	56.86	63.17	71.05	78.93	80.51
3.415	41	4.110	140	14.036	20.42	24.62	28.62	29.42	32.61	35.00	36.59	40.56	41.36	45.48	48.48	50.07	56.39	64.30	72.19	73.77
3.462	26	2.607	90	9.023	25.94	30.06	34.02	34.81	37.98	40.34	41.92	45.87	46.66	50.76	53.76	55.34	61.65	69.53	77.41	78.99
3.500	32	3.208	112	11.229	23.59	27.74	31.71	32.51	35.68	38.05	39.64	43.60	44.38	48.50	51.49	53.07	59.39	67.28	75.17	76.75
3.500	40	4.010	140	14.036	20.49	24.69	28.69	29.49	32.69	35.07	36.66	40.64	41.43	45.55	48.56	50.14	56.47	64.37	72.27	73.85
Length Factor*					1.18	1.22	1.26	1.26	1.29	1.31	1.32	1.35	1.36	1.38	1.40	1.41	1.45	1.49	1.52	1.53

Center distance is greater than eight times the small sprocket and the large sprocket is not flanged. See Engineering Section for details.
* The length correction factor must be used to determine the proper belt width.

8M HT500 Selection Table

Speed Ratio	Sprocket Combinations: Driver No. of Teeth	Driver Pitch Dia. Inches	Driven No. of Teeth	Driven Pitch Dia. Inches	Center Distance, Inches: 640-8MX	720-8MX	800-8MX	896-8MX	960-8MX	1000-8MX	1040-8MX	1120-8MX	1200-8MX	1224-8MX	1280-8MX	1440-8MX	1600-8MX	1760-8MX
Length Factor*					0.79	0.83	0.87	0.91	0.94	0.96	0.97	1.00	1.03	1.03	1.05	1.10	1.14	1.17
3.556	63	6.316	224	22.457														
3.590	39	3.910	140	14.036											9.75	13.27	16.62	19.90
3.600	25	2.506	90	9.023				7.90	9.27	10.10	10.93	12.57	14.19	14.68	15.80	19.01	22.20	25.38
3.600	50	5.013	180	18.046														15.11
3.613	31	3.108	112	11.229							8.18	9.94	11.64	12.15	13.31	16.59	19.82	23.03
3.636	22	2.206	80	8.020			7.12	9.14	10.46	11.28	12.09	13.70	15.31	15.80	16.91	20.10	23.28	26.45
3.684	38	3.810	140	14.036											9.81	13.34	16.69	19.97
3.733	30	3.008	112	11.229							8.24	10.01	11.71	12.21	13.38	16.65	19.89	23.10
3.733	60	6.015	224	22.457														
3.750	48	4.812	180	18.046														15.23
3.784	37	3.709	140	14.036											9.87	13.40	16.76	20.04
3.862	29	2.907	112	11.229						7.37	8.30	10.07	11.77	12.28	13.44	16.72	19.96	23.17
3.889	36	3.609	140	14.036											9.93	13.46	16.82	20.11
4.000	28	2.807	112	11.229						7.43	8.36	10.13	11.84	12.35	13.51	16.79	20.03	23.24
4.000	35	3.509	140	14.036											9.99	13.53	16.89	20.17
4.000	45	4.511	180	18.046													11.77	15.42
4.000	56	5.614	224	22.457														
4.091	22	2.206	90	9.023			5.92	8.09	9.46	10.30	11.12	12.77	14.40	14.88	16.01	19.22	22.42	25.60
4.118	34	3.409	140	14.036											10.05	13.59	16.95	20.24
4.148	27	2.707	112	11.229						7.49	8.42	10.20	11.90	12.41	13.58	16.86	20.10	23.31
4.226	53	5.314	224	22.457														
4.242	33	3.308	140	14.036											10.11	13.66	17.02	20.31
4.286	42	4.211	180	18.046													11.95	15.60
4.308	26	2.607	112	11.229						7.55	8.48	10.26	11.97	12.48	13.64	16.93	20.17	23.38
4.375	32	3.208	140	14.036											10.17	13.72	17.09	20.38
4.390	41	4.110	180	18.046													12.01	15.67
4.480	25	2.506	112	11.229						7.61	8.54	10.32	12.03	12.54	13.71	16.99	20.24	23.45
4.480	50	5.013	224	22.457														
4.500	40	4.010	180	18.046													12.07	15.73
4.516	31	3.108	140	14.036										8.89	10.23	13.78	17.15	20.45
4.615	39	3.910	180	18.046													12.13	15.79
4.667	30	3.008	140	14.036										8.95	10.29	13.85	17.22	20.51
4.667	48	4.812	224	22.457														
4.737	38	3.810	180	18.046													12.18	15.85
4.828	29	2.907	140	14.036										9.01	10.35	13.91	17.28	20.58
4.865	37	3.709	180	18.046													12.24	15.92
4.978	45	4.511	224	22.457														
5.000	28	2.807	140	14.036										9.06	10.41	13.97	17.35	20.65
5.000	36	3.609	180	18.046													12.30	15.98
5.091	22	2.206	112	11.229						7.78	8.72	10.51	12.23	12.74	13.90	17.20	20.44	23.66
5.143	35	3.509	180	18.046													12.36	16.04
5.185	27	2.707	140	14.036										9.12	10.47	14.04	17.42	20.72
5.294	34	3.409	180	18.046													12.42	16.10
5.333	42	4.211	224	22.457														
5.385	26	2.607	140	14.036										9.18	10.53	14.10	17.48	20.78
5.455	33	3.308	180	18.046													12.48	16.16
5.463	41	4.110	224	22.457														
5.600	25	2.506	140	14.036									8.61	9.24	10.59	14.16	17.55	20.85
5.600	40	4.010	224	22.457														
5.625	32	3.208	180	18.046													12.53	16.22
5.744	39	3.910	224	22.457														
5.806	31	3.108	180	18.046													12.59	16.29
5.895	38	3.810	224	22.457														
6.000	30	3.008	180	18.046													12.65	16.35
6.054	37	3.709	224	22.457														
6.207	29	2.907	180	18.046													12.71	16.41
6.222	36	3.609	224	22.457														
6.364	22	2.206	140	14.036									8.78	9.41	10.77	14.35	17.74	21.05
6.400	35	3.509	224	22.457														
6.429	28	2.807	180	18.046													12.77	16.47
6.588	34	3.409	224	22.457														
6.667	27	2.707	180	18.046													12.83	16.53
6.788	33	3.308	224	22.457														
6.923	26	2.607	180	18.046													12.88	16.59
7.000	32	3.208	224	22.457														
7.200	25	2.506	180	18.046													12.94	16.66
7.226	31	3.108	224	22.457														
7.467	30	3.008	224	22.457														
7.724	29	2.907	224	22.457														
8.000	28	2.807	224	22.457														
8.182	22	2.206	180	18.046													13.12	16.84
8.296	27	2.707	224	22.457														
8.615	26	2.607	224	22.457														
8.960	25	2.506	224	22.457														
10.182	22	2.206	224	22.457														
Length Factor*					0.79	0.83	0.87	0.91	0.94	0.96	0.97	1.00	1.03	1.03	1.05	1.10	1.14	1.17

Center distance is greater than eight times the small sprocket and the large sprocket is not flanged. See Engineering Section for details.

* The length correction factor must be used to determine the proper belt width.

SELECTION

8M HT500 Selection Table (Continued)

Speed Ratio	Sprocket Combinations: Driver No. of Teeth	Driver Pitch Dia. Inches	Driven No. of Teeth	Driven Pitch Dia. Inches	Center Distance, Inches: 1792-8MX	2000-8MX	2200-8MX	2240-8MX	2400-8MX	2520-8MX	2600-8MX	2800-8MX	2840-8MX	3048-8MX	3200-8MX	3280-8MX	3600-8MX	4000-8MX	4400-8MX	4480-8MX
Length Factor*					1.18	1.22	1.26	1.26	1.29	1.31	1.32	1.35	1.36	1.38	1.40	1.41	1.45	1.49	1.52	1.53
3.556	63	6.316	224	22.457			18.96	19.83	23.23	25.73	27.38	31.48	32.29	36.51	39.57	41.17	47.58	55.55	63.50	65.09
3.590	39	3.910	140	14.036	20.55	24.76	28.76	29.57	32.76	35.14	36.74	40.71	41.50	45.62	48.63	50.21	56.54	64.45	72.34	73.92
3.600	25	2.506	90	9.023	26.02	30.14	34.09	34.89	38.05	40.42	42.00	45.95	46.74	50.84	53.84	55.41	61.72	69.61	77.49	79.07
3.600	50	5.013	180	18.046	15.80	20.20	24.32	25.13	28.38	30.80	32.41	36.43	37.22	41.38	44.40	45.99	52.35	60.28	68.19	69.77
3.613	31	3.108	112	11.229	23.67	27.81	31.79	32.58	35.75	38.13	39.71	43.67	44.46	48.57	51.57	53.15	59.47	67.36	75.25	76.82
3.636	22	2.206	80	8.020	27.09	31.20	35.15	35.95	39.11	41.47	43.05	47.00	47.79	51.89	54.88	56.46	62.77	70.65	78.53	80.11
3.684	38	3.810	140	14.036	20.62	24.83	28.83	29.64	32.83	35.22	36.81	40.78	41.57	45.70	48.71	50.29	56.62	64.52	72.42	74.00
3.733	30	3.008	112	11.229	23.74	27.88	31.86	32.65	35.83	38.20	39.79	43.75	44.53	48.64	51.64	53.22	59.54	67.43	75.32	76.90
3.733	60	6.015	224	22.457		14.63	19.15	20.02	23.43	25.93	27.58	31.69	32.50	36.71	39.78	41.38	47.79	55.77	63.72	65.31
3.750	48	4.812	180	18.046	15.93	20.33	24.45	25.27	28.52	30.94	32.55	36.57	37.36	41.52	44.55	46.14	52.49	60.42	68.34	69.92
3.784	37	3.709	140	14.036	20.69	24.90	28.91	29.71	32.90	35.29	36.88	40.86	41.65	45.77	48.78	50.36	56.69	64.60	72.49	74.07
3.862	29	2.907	112	11.229	23.81	27.96	31.93	32.73	35.90	38.28	39.86	43.82	44.61	48.72	51.72	53.30	59.62	67.51	75.40	76.98
3.889	36	3.609	140	14.036	20.76	24.97	28.98	29.78	32.97	35.36	36.95	40.93	41.72	45.84	48.85	50.44	56.77	64.67	72.57	74.15
4.000	28	2.807	112	11.229	23.88	28.03	32.00	32.80	35.97	38.35	39.93	43.89	44.68	48.79	51.79	53.37	59.69	67.58	75.47	77.05
4.000	35	3.509	140	14.036	20.83	25.03	29.05	29.85	33.05	35.43	37.03	41.00	41.79	45.92	48.93	50.51	56.84	64.75	72.64	74.22
4.000	45	4.511	180	18.046	16.12	20.53	24.65	25.47	28.73	31.15	32.76	36.78	37.58	41.73	44.76	46.35	52.71	60.65	68.56	70.15
4.000	56	5.614	224	22.457		14.87	19.40	20.27	23.68	26.19	27.85	31.96	32.77	36.99	40.05	41.66	48.08	56.06	64.01	65.60
4.091	22	2.206	90	9.023	26.23	30.36	34.32	35.11	38.27	40.64	42.22	46.17	46.96	51.07	54.06	55.64	61.95	69.84	77.72	79.30
4.118	34	3.409	140	14.036	20.89	25.10	29.12	29.92	33.12	35.51	37.10	41.07	41.87	45.99	49.00	50.58	56.92	64.82	72.72	74.30
4.148	27	2.707	112	11.229	23.95	28.10	32.08	32.87	36.05	38.42	40.01	43.97	44.76	48.87	51.87	53.45	59.77	67.66	75.55	77.13
4.226	53	5.314	224	22.457		15.04	19.59	20.46	23.88	26.39	28.05	32.16	32.97	37.20	40.26	41.87	48.29	56.27	64.23	65.82
4.242	33	3.308	140	14.036	20.96	25.17	29.19	29.99	33.19	35.58	37.17	41.15	41.94	46.07	49.07	50.66	56.99	64.90	72.80	74.37
4.286	42	4.211	180	18.046	16.30	20.72	24.86	25.68	28.93	31.36	32.97	36.99	37.79	41.95	44.98	46.57	52.93	60.87	68.79	70.37
4.308	26	2.607	112	11.229	24.02	28.17	32.15	32.95	36.12	38.50	40.08	44.04	44.83	48.94	51.94	53.52	59.84	67.74	75.63	77.20
4.375	32	3.208	140	14.036	21.03	25.24	29.26	30.06	33.26	35.65	37.24	41.22	42.01	46.14	49.15	50.73	57.06	64.97	72.87	74.45
4.390	41	4.110	180	18.046	16.37	20.79	24.92	25.74	29.00	31.43	33.04	37.06	37.86	42.02	45.05	46.64	53.01	60.94	68.86	70.44
4.480	25	2.506	112	11.229	24.09	28.25	32.22	33.02	36.19	38.57	40.16	44.12	44.91	49.02	52.02	53.60	59.92	67.81	75.70	77.28
4.480	50	5.013	224	22.457		15.22	19.77	20.65	24.07	26.59	28.25	32.36	33.18	37.40	40.47	42.08	48.50	56.49	64.45	66.04
4.500	40	4.010	180	18.046	16.43	20.85	24.99	25.81	29.07	31.50	33.11	37.13	37.93	42.09	45.12	46.71	53.08	61.01	68.93	70.52
4.516	31	3.108	140	14.036	21.10	25.31	29.33	30.13	33.33	35.72	37.31	41.29	42.08	46.21	49.22	50.81	57.14	65.05	72.95	74.52
4.615	39	3.910	180	18.046	16.49	20.92	25.06	25.88	29.14	31.57	33.18	37.20	38.00	42.16	45.19	46.79	53.15	61.09	69.01	70.59
4.667	30	3.008	140	14.036	21.17	25.38	29.40	30.20	33.40	35.79	37.39	41.37	42.16	46.28	49.29	50.88	57.21	65.12	73.02	74.60
4.667	48	4.812	224	22.457		15.34	19.90	20.77	24.20	26.72	28.38	32.50	33.31	37.54	40.61	42.22	48.65	56.63	64.59	66.18
4.737	38	3.810	180	18.046	16.55	20.99	25.12	25.95	29.21	31.64	33.25	37.27	38.07	42.23	45.26	46.86	53.22	61.16	69.08	70.67
4.828	29	2.907	140	14.036	21.23	25.45	29.47	30.28	33.47	35.87	37.46	41.44	42.23	46.36	49.37	50.95	57.29	65.20	73.10	74.68
4.865	37	3.709	180	18.046	16.62	21.05	25.19	26.01	29.28	31.70	33.32	37.34	38.14	42.30	45.34	46.93	53.30	61.23	69.16	70.74
4.978	45	4.511	224	22.457		15.51	20.08	20.96	24.39	26.91	28.58	32.70	33.52	37.75	40.82	42.43	48.86	56.85	64.81	66.40
5.000	28	2.807	140	14.036	21.30	25.52	29.54	30.35	33.55	35.94	37.53	41.51	42.30	46.43	49.44	51.03	57.36	65.27	73.17	74.75
5.000	36	3.609	180	18.046	16.68	21.12	25.26	26.08	29.34	31.77	33.39	37.41	38.21	42.38	45.41	47.00	53.37	61.31	69.23	70.81
5.091	22	2.206	112	11.229	24.30	28.46	32.44	33.24	36.41	38.79	40.38	44.34	45.13	49.24	52.24	53.82	60.14	68.04	75.93	77.51
5.143	35	3.509	180	18.046	16.74	21.18	25.33	26.15	29.41	31.84	33.46	37.48	38.28	42.45	45.48	47.07	53.44	61.38	69.30	70.89
5.185	27	2.707	140	14.036	21.37	25.59	29.61	30.42	33.62	36.01	37.60	41.58	42.38	46.50	49.52	51.10	57.44	65.34	73.25	74.83
5.294	34	3.409	180	18.046	16.80	21.25	25.39	26.22	29.48	31.91	33.53	37.55	38.35	42.52	45.55	47.15	53.51	61.45	69.38	70.96
5.333	42	4.211	224	22.457		15.69	20.27	21.15	24.59	27.11	28.78	32.90	33.72	37.95	41.03	42.64	49.07	57.06	65.03	66.62
5.385	26	2.607	140	14.036	21.44	25.66	29.68	30.49	33.69	36.08	37.67	41.66	42.45	46.58	49.59	51.17	57.51	65.42	73.32	74.90
5.455	33	3.308	180	18.046	16.87	21.31	25.46	26.28	29.55	31.98	33.60	37.62	38.42	42.59	45.62	47.22	53.59	61.53	69.45	71.04
5.463	41	4.110	224	22.457		15.75	20.33	21.21	24.65	27.18	28.84	32.97	33.79	38.02	41.10	42.71	49.14	57.14	65.10	66.69
5.600	25	2.506	140	14.036	21.51	25.73	29.75	30.56	33.76	36.15	37.75	41.73	42.52	46.65	49.66	51.25	57.58	65.49	73.40	74.98
5.600	40	4.010	224	22.457		15.81	20.39	21.28	24.72	27.24	28.91	33.04	33.85	38.09	41.17	42.78	49.21	57.21	65.17	66.76
5.625	32	3.208	180	18.046	16.93	21.38	25.53	26.35	29.62	32.05	33.67	37.69	38.49	42.66	45.69	47.29	53.66	61.60	69.53	71.11
5.744	39	3.910	224	22.457		15.86	20.46	21.34	24.78	27.31	28.97	33.10	33.92	38.16	41.23	42.85	49.28	57.28	65.25	66.84
5.806	31	3.108	180	18.046	16.99	21.44	25.59	26.42	29.69	32.12	33.74	37.76	38.57	42.73	45.76	47.36	53.73	61.67	69.60	71.18
5.895	38	3.810	224	22.457		15.92	20.52	21.40	24.84	27.37	29.04	33.17	33.99	38.23	41.30	42.92	49.35	57.35	65.32	66.91
6.000	30	3.008	180	18.046	17.05	21.51	25.66	26.48	29.75	32.19	33.80	37.83	38.64	42.80	45.84	47.43	53.80	61.75	69.67	71.26
6.054	37	3.709	224	22.457		15.98	20.58	21.46	24.91	27.44	29.11	33.24	34.06	38.30	41.37	42.99	49.42	57.42	65.39	66.98
6.207	29	2.907	180	18.046	17.12	21.57	25.73	26.55	29.82	32.26	33.87	37.91	38.71	42.87	45.91	47.50	53.88	61.82	69.75	71.33
6.222	36	3.609	224	22.457		16.04	20.64	21.52	24.97	27.50	29.17	33.31	34.12	38.36	41.44	43.06	49.49	57.49	65.46	67.05
6.364	22	2.206	140	14.036	21.71	25.94	29.96	30.77	33.97	36.37	37.96	41.95	42.74	46.87	49.88	51.47	57.81	65.72	73.62	75.20
6.400	35	3.509	224	22.457		16.10	20.70	21.59	25.04	27.57	29.24	33.37	34.19	38.43	41.51	43.13	49.56	57.56	65.54	67.13
6.429	28	2.807	180	18.046	17.18	21.64	25.79	26.62	29.89	32.32	33.94	37.98	38.78	42.94	45.98	47.58	53.95	61.89	69.82	71.41
6.588	34	3.409	224	22.457		16.16	20.76	21.65	25.10	27.63	29.30	33.44	34.26	38.50	41.58	43.20	49.63	57.64	65.61	67.20
6.667	27	2.707	180	18.046	17.24	21.70	25.86	26.69	29.96	32.39	34.01	38.04	38.85	43.02	46.05	47.65	54.02	61.97	69.89	71.48
6.788	33	3.308	224	22.457		16.22	20.83	21.71	25.16	27.70	29.37	33.51	34.33	38.57	41.65	43.27	49.70	57.71	65.68	67.27
6.923	26	2.607	180	18.046	17.30	21.77	25.93	26.75	30.03	32.46	34.08	38.11	38.92	43.09	46.12	47.72	54.09	62.04	69.97	71.55
7.000	32	3.208	224	22.457		16.27	20.89	21.77	25.23	27.76	29.43	33.57	34.39	38.64	41.72	43.33	49.77	57.78	65.75	67.34
7.200	25	2.506	180	18.046	17.36	21.83	25.99	26.82	30.09	32.53	34.15	38.19	38.99	43.16	46.19	47.79	54.17	62.11	70.04	71.63
7.226	31	3.108	224	22.457		16.33	20.95	21.84	25.29	27.83	29.50	33.64	34.46	38.71	41.79	43.40	49.84	57.85	65.82	67.42
7.467	30	3.008	224	22.457		16.39	21.01	21.90	25.36	27.89	29.57	33.71	34.53	38.77	41.85	43.47	49.91	57.92	65.90	67.49
7.724	29	2.907	224	22.457		16.45	21.07	21.96	25.42	27.96	29.63	33.77	34.59	38.84	41.92	43.54	49.99	57.99	65.97	67.56
8.000	28	2.807	224	22.457		16.51	21.13	22.02	25.48	28.02	29.70	33.84	34.66	38.91	41.99	43.61	50.06	58.06	66.04	67.63
8.182	22	2.206	180	18.046	17.55	22.02	26.19	27.02	30.30	32.74	34.36	38.39	39.20	43.37	46.41	48.00	54.38	62.33	70.26	71.85
8.296	27	2.707	224	22.457		16.56	21.20	22.08	25.55	28.09	29.76	33.91	34.73	38.98	42.06	43.68	50.13	58.14	66.11	67.70
8.615	26	2.607	224	22.457		16.62	21.26	22.15	25.61	28.15	29.83	33.97	34.79	39.05	42.13	43.75	50.20	58.21	66.18	67.78
8.960	25	2.506	224	22.457		16.68	21.32	22.21	25.68	28.22	29.89	34.04	34.86	39.12	42.20	43.82	50.27	58.28	66.26	67.85
10.182	22	2.206	224	22.457		16.85	21.50	22.39	25.87	28.41	30.09	34.24	35.06	39.32	42.40	44.03	50.48	58.49	66.47	68.07
Length Factor*					1.18	1.22	1.26	1.26	1.29	1.31	1.32	1.35	1.36	1.38	1.40	1.41	1.45	1.49	1.52	1.53

Center distance is greater than eight times the small sprocket and the large sprocket is not flanged. See Engineering Section for details.

* The length correction factor must be used to determine the proper belt width.

14M HT500 Selection Table

Speed Ratio	Sprocket Combinations: Driver No. of Teeth	Driver Pitch Dia. Inches	Driven No. of Teeth	Driven Pitch Dia. Inches	Center Distance, Inches: 994-14MX	1120-14MX	1190-14MX	1260-14MX	1400-14MX	1568-14MX	1610-14MX	1750-14MX	1890-14MX	1960-14MX	2100-14MX	2240-14MX	2310-14MX
Length Factor*					**0.68**	**0.73**	**0.75**	**0.77**	**0.81**	**0.85**	**0.86**	**0.89**	**0.92**	**0.94**	**0.96**	**0.99**	**1.00**
1.000	28	4.912	28	4.912	11.85	14.33	15.71	17.09	19.84	23.15	23.98	26.73	29.49	30.87	33.62	36.38	37.75
1.000	29	5.088	29	5.088	11.57	14.05	15.43	16.81	19.57	22.87	23.70	26.46	29.21	30.59	33.35	36.10	37.48
1.000	30	5.263	30	5.263	11.30	13.78	15.16	16.54	19.29	22.60	23.43	26.18	28.94	30.32	33.07	35.83	37.20
1.000	31	5.439	31	5.439	11.02	13.50	14.88	16.26	19.02	22.32	23.15	25.91	28.66	30.04	32.80	35.55	36.93
1.000	32	5.614	32	5.614	10.75	13.23	14.61	15.99	18.74	22.05	22.88	25.63	28.39	29.77	32.52	35.28	36.65
1.000	33	5.790	33	5.790	10.47	12.95	14.33	15.71	18.47	21.77	22.60	25.36	28.11	29.49	32.25	35.00	36.38
1.000	34	5.965	34	5.965	10.20	12.68	14.06	15.44	18.19	21.50	22.33	25.08	27.84	29.22	31.97	34.73	36.10
1.000	35	6.141	35	6.141	9.92	12.40	13.78	15.16	17.91	21.22	22.05	24.80	27.56	28.94	31.69	34.45	35.82
1.000	36	6.316	36	6.316	9.64	12.12	13.50	14.88	17.64	20.94	21.77	24.53	27.28	28.66	31.42	34.17	35.55
1.000	37	6.492	37	6.492	9.37	11.85	13.23	14.61	17.36	20.67	21.50	24.25	27.01	28.39	31.14	33.90	35.27
1.000	38	6.667	38	6.667	9.09	11.57	12.95	14.33	17.09	20.39	21.22	23.98	26.73	28.11	30.87	33.62	35.00
1.000	39	6.842	39	6.842	8.82	11.30	12.68	14.06	16.81	20.12	20.95	23.70	26.46	27.84	30.59	33.35	34.72
1.000	40	7.018	40	7.018	8.54	11.02	12.40	13.78	16.54	19.84	20.67	23.43	26.18	27.56	30.32	33.07	34.45
1.000	43	7.544	43	7.544		10.19	11.57	12.95	15.71	19.01	19.84	22.60	25.35	26.73	29.49	32.24	33.62
1.000	45	7.895	45	7.895		9.64	11.02	12.40	15.16	18.46	19.29	22.05	24.80	26.18	28.94	31.69	33.07
1.000	48	8.421	48	8.421			10.20	11.58	14.33	17.64	18.47	21.22	23.98	25.36	28.11	30.87	32.24
1.000	50	8.772	50	8.772			9.65	11.03	13.78	17.09	17.92	20.67	23.43	24.81	27.56	30.32	31.69
1.000	53	9.299	53	9.299				10.20	12.95	16.26	17.09	19.84	22.60	23.98	26.73	29.49	30.86
1.000	56	9.825	56	9.825					12.13	15.43	16.26	19.02	21.77	23.15	25.91	28.66	30.04
1.000	60	10.527	60	10.527						14.33	15.16	17.91	20.67	22.05	24.80	27.56	28.93
1.000	63	11.053	63	11.053						13.50	14.33	17.09	19.84	21.22	23.98	26.73	28.11
1.000	67	11.755	67	11.755							13.23	15.99	18.74	20.12	22.88	25.63	27.01
1.000	71	12.457	71	12.457								14.88	17.64	19.02	21.77	24.53	25.90
1.000	75	13.158	75	13.158									16.54	17.92	20.67	23.43	24.80
1.000	80	14.036	80	14.036									15.16	16.54	19.29	22.05	23.42
1.026	38	6.667	39	6.842	8.95	11.43	12.81	14.19	16.95	20.25	21.08	23.84	26.59	27.97	30.73	33.48	34.86
1.026	39	6.842	40	7.018	8.68	11.16	12.54	13.92	16.67	19.98	20.81	23.56	26.32	27.70	30.45	33.21	34.58
1.027	37	6.492	38	6.667	9.23	11.71	13.09	14.47	17.22	20.53	21.36	24.11	26.87	28.25	31.00	33.76	35.13
1.028	36	6.316	37	6.492	9.51	11.99	13.37	14.75	17.50	20.81	21.64	24.39	27.15	28.53	31.28	34.04	35.41
1.029	34	5.965	35	6.141	10.06	12.54	13.92	15.30	18.05	21.36	22.19	24.94	27.70	29.08	31.83	34.59	35.96
1.029	35	6.141	36	6.316	9.78	12.26	13.64	15.02	17.78	21.08	21.91	24.67	27.42	28.80	31.56	34.31	35.69
1.030	33	5.790	34	5.965	10.33	12.81	14.19	15.57	18.33	21.63	22.46	25.22	27.97	29.35	32.11	34.86	36.24
1.031	32	5.614	33	5.790	10.61	13.09	14.47	15.85	18.60	21.91	22.74	25.49	28.25	29.63	32.38	35.14	36.51
1.032	31	5.439	32	5.614	10.88	13.36	14.74	16.12	18.88	22.18	23.01	25.77	28.52	29.90	32.66	35.41	36.79
1.033	30	5.263	31	5.439	11.16	13.64	15.02	16.40	19.15	22.46	23.29	26.04	28.80	30.18	32.93	35.69	37.06
1.034	29	5.088	30	5.263	11.44	13.92	15.30	16.68	19.43	22.74	23.57	26.32	29.08	30.46	33.21	35.97	37.34
1.036	28	4.912	29	5.088	11.71	14.19	15.57	16.95	19.71	23.01	23.84	26.60	29.35	30.73	33.49	36.24	37.62
1.042	48	8.421	50	8.772			9.92	11.30	14.06	17.36	18.19	20.95	23.70	25.08	27.84	30.59	31.97
1.047	43	7.544	45	7.895		9.92	11.30	12.68	15.43	18.74	19.57	22.32	25.08	26.46	29.21	31.97	33.34
1.050	60	10.527	63	11.053						13.91	14.74	17.50	20.25	21.63	24.39	27.14	28.52
1.053	38	6.667	40	7.018	8.82	11.30	12.68	14.06	16.81	20.12	20.95	23.70	26.46	27.84	30.59	33.35	34.72
1.054	37	6.492	39	6.842	9.09	11.57	12.95	14.33	17.09	20.39	21.22	23.98	26.73	28.11	30.87	33.62	35.00
1.056	36	6.316	38	6.667	9.37	11.85	13.23	14.61	17.36	20.67	21.50	24.25	27.01	28.39	31.14	33.90	35.27
1.056	71	12.457	75	13.158								14.33	17.08	18.46	21.22	23.97	25.35
1.057	35	6.141	37	6.492	9.64	12.12	13.50	14.88	17.64	20.94	21.77	24.53	27.28	28.66	31.42	34.17	35.55
1.057	53	9.299	56	9.825					12.54	15.84	16.67	19.43	22.18	23.56	26.32	29.07	30.45
1.059	34	5.965	36	6.316	9.92	12.40	13.78	15.16	17.91	21.22	22.05	24.80	27.56	28.94	31.69	34.45	35.82
1.060	50	8.772	53	9.299				10.61	13.36	16.67	17.50	20.26	23.01	24.39	27.15	29.90	31.28
1.060	67	11.755	71	12.457								15.43	18.19	19.57	22.32	25.08	26.45
1.061	33	5.790	35	6.141	10.19	12.67	14.05	15.43	18.19	21.49	22.32	25.08	27.83	29.21	31.97	34.72	36.10
1.063	32	5.614	34	5.965	10.47	12.95	14.33	15.71	18.47	21.77	22.60	25.36	28.11	29.49	32.25	35.00	36.38
1.063	63	11.053	67	11.755						12.95	13.78	16.53	19.29	20.67	23.42	26.18	27.55
1.065	31	5.439	33	5.790	10.74	13.22	14.60	15.98	18.74	22.05	22.88	25.63	28.39	29.77	32.52	35.28	36.65
1.067	30	5.263	32	5.614	11.02	13.50	14.88	16.26	19.02	22.32	23.15	25.91	28.66	30.04	32.80	35.55	36.93
1.067	45	7.895	48	8.421		9.23	10.61	11.99	14.74	18.05	18.88	21.63	24.39	25.77	28.52	31.28	32.65
1.067	75	13.158	80	14.036									15.84	17.22	19.98	22.73	24.11
1.069	29	5.088	31	5.439	11.30	13.78	15.16	16.54	19.29	22.60	23.43	26.18	28.94	30.32	33.07	35.83	37.20
1.071	28	4.912	30	5.263	11.57	14.05	15.43	16.81	19.57	22.87	23.70	26.46	29.21	30.59	33.35	36.10	37.48
1.071	56	9.825	60	10.527					11.57	14.88	15.71	18.46	21.22	22.60	25.35	28.11	29.48
1.075	40	7.018	43	7.544	8.12	10.60	11.99	13.37	16.12	19.43	20.26	23.01	25.77	27.15	29.90	32.66	34.03
1.081	37	6.492	40	7.018	8.95	11.43	12.81	14.19	16.95	20.25	21.08	23.84	26.59	27.97	30.73	33.48	34.86
1.083	36	6.316	39	6.842	9.23	11.71	13.09	14.47	17.22	20.53	21.36	24.11	26.87	28.25	31.00	33.76	35.13
1.086	35	6.141	38	6.667	9.50	11.98	13.36	14.74	17.50	20.80	21.63	24.39	27.14	28.52	31.28	34.03	35.41
1.088	34	5.965	37	6.492	9.78	12.26	13.64	15.02	17.77	21.08	21.91	24.66	27.42	28.80	31.56	34.31	35.69
1.091	33	5.790	36	6.316	10.05	12.53	13.91	15.29	18.05	21.36	22.19	24.94	27.70	29.08	31.83	34.59	35.96
1.094	32	5.614	35	6.141	10.33	12.81	14.19	15.57	18.33	21.63	22.46	25.22	27.97	29.35	32.11	34.86	36.24
1.097	31	5.439	34	5.965	10.61	13.09	14.47	15.85	18.60	21.91	22.74	25.49	28.25	29.63	32.38	35.14	36.51
1.100	30	5.263	33	5.790	10.88	13.36	14.74	16.12	18.88	22.18	23.01	25.77	28.52	29.90	32.66	35.41	36.79
1.103	29	5.088	32	5.614	11.16	13.64	15.02	16.40	19.15	22.46	23.29	26.04	28.80	30.18	32.93	35.69	37.06
1.103	39	6.842	43	7.544	8.26	10.74	12.12	13.50	16.26	19.56	20.39	23.15	25.90	27.28	30.04	32.79	34.17
1.104	48	8.421	53	9.299				10.88	13.64	16.94	17.77	20.53	23.28	24.66	27.42	30.17	31.55
Length Factor*					**0.68**	**0.73**	**0.75**	**0.77**	**0.81**	**0.85**	**0.86**	**0.89**	**0.92**	**0.94**	**0.96**	**0.99**	**1.00**

* The length correction factor must be used to determine the proper belt width.

SELECTION

14M HT500 Selection Table (Continued)

Speed Ratio	Sprocket Combinations: Driver No. of Teeth	Driver Pitch Dia. Inches	Driven No. of Teeth	Driven Pitch Dia. Inches	Center Distance, Inches: 2380-14MX	2450-14MX	2520-14MX	2590-14MX	2660-14MX	2800-14MX	3136-14MX	3304-14MX	3360-14MX	3500-14MX	3850-14MX	3920-14MX	4326-14MX	4410-14MX
Length Factor*					**1.01**	**1.02**	**1.03**	**1.04**	**1.05**	**1.07**	**1.12**	**1.14**	**1.14**	**1.16**	**1.19**	**1.20**	**1.24**	**1.25**
1.000	28	4.912	28	4.912	39.13	40.51	41.89	43.27	44.64	47.40	54.01	57.32	58.42	61.18	68.07	69.45	77.44	79.09
1.000	29	5.088	29	5.088	38.86	40.24	41.61	42.99	44.37	47.13	53.74	57.05	58.15	60.90	67.79	69.17	77.16	78.82
1.000	30	5.263	30	5.263	38.58	39.96	41.34	42.72	44.09	46.85	53.46	56.77	57.87	60.63	67.52	68.90	76.89	78.54
1.000	31	5.439	31	5.439	38.31	39.69	41.06	42.44	43.82	46.58	53.19	56.50	57.60	60.35	67.24	68.62	76.61	78.27
1.000	32	5.614	32	5.614	38.03	39.41	40.79	42.17	43.54	46.30	52.91	56.22	57.32	60.08	66.97	68.35	76.34	77.99
1.000	33	5.790	33	5.790	37.76	39.14	40.51	41.89	43.27	46.03	52.64	55.95	57.05	59.80	66.69	68.07	76.06	77.72
1.000	34	5.965	34	5.965	37.48	38.86	40.24	41.62	42.99	45.75	52.36	55.67	56.77	59.53	66.42	67.80	75.79	77.44
1.000	35	6.141	35	6.141	37.20	38.58	39.96	41.34	42.71	45.47	52.08	55.39	56.49	59.25	66.14	67.52	75.51	77.16
1.000	36	6.316	36	6.316	36.93	38.31	39.68	41.06	42.44	45.20	51.81	55.12	56.22	58.97	65.86	67.24	75.23	76.89
1.000	37	6.492	37	6.492	36.65	38.03	39.41	40.79	42.16	44.92	51.53	54.84	55.94	58.70	65.59	66.97	74.96	76.61
1.000	38	6.667	38	6.667	36.38	37.76	39.13	40.51	41.89	44.65	51.26	54.57	55.67	58.42	65.31	66.69	74.68	76.34
1.000	39	6.842	39	6.842	36.10	37.48	38.86	40.24	41.61	44.37	50.98	54.29	55.39	58.15	65.04	66.42	74.41	76.06
1.000	40	7.018	40	7.018	35.83	37.21	38.58	39.96	41.34	44.10	50.71	54.02	55.12	57.87	64.76	66.14	74.13	75.79
1.000	43	7.544	43	7.544	35.00	36.38	37.75	39.13	40.51	43.27	49.88	53.19	54.29	57.04	63.93	65.31	73.30	74.96
1.000	45	7.895	45	7.895	34.45	35.83	37.20	38.58	39.96	42.72	49.33	52.64	53.74	56.49	63.38	64.76	72.75	74.41
1.000	48	8.421	48	8.421	33.62	35.00	36.38	37.76	39.13	41.89	48.50	51.81	52.91	55.67	62.56	63.94	71.93	73.58
1.000	50	8.772	50	8.772	33.07	34.45	35.83	37.21	38.58	41.34	47.95	51.26	52.36	55.12	62.01	63.39	71.38	73.03
1.000	53	9.299	53	9.299	32.24	33.62	35.00	36.38	37.75	40.51	47.12	50.43	51.53	54.29	61.18	62.56	70.55	72.20
1.000	56	9.825	56	9.825	31.42	32.80	34.17	35.55	36.93	39.69	46.30	49.61	50.71	53.46	60.35	61.73	69.72	71.38
1.000	60	10.527	60	10.527	30.31	31.69	33.07	34.45	35.82	38.58	45.19	48.50	49.60	52.36	59.25	60.63	68.62	70.27
1.000	63	11.053	63	11.053	29.49	30.87	32.24	33.62	35.00	37.76	44.37	47.68	48.78	51.53	58.42	59.80	67.79	69.45
1.000	67	11.755	67	11.755	28.39	29.77	31.14	32.52	33.90	36.66	43.27	46.58	47.68	50.43	57.32	58.70	66.69	68.35
1.000	71	12.457	71	12.457	27.28	28.66	30.04	31.42	32.79	35.55	42.16	45.47	46.57	49.33	56.22	57.60	65.59	67.24
1.000	75	13.158	75	13.158	26.18	27.56	28.94	30.32	31.69	34.45	41.06	44.37	45.47	48.23	55.12	56.50	64.49	66.14
1.000	80	14.036	80	14.036	24.80	26.18	27.56	28.94	30.31	33.07	39.68	42.99	44.09	46.85	53.74	55.12	63.11	64.76
1.026	38	6.667	39	6.842	36.24	37.62	38.99	40.37	41.75	44.51	51.12	54.43	55.53	58.28	65.17	66.55	74.55	76.20
1.026	39	6.842	40	7.018	35.96	37.34	38.72	40.10	41.47	44.23	50.84	54.15	55.25	58.01	64.90	66.28	74.27	75.92
1.027	37	6.492	38	6.667	36.51	37.89	39.27	40.65	42.02	44.78	51.39	54.70	55.80	58.56	65.45	66.83	74.82	76.47
1.028	36	6.316	37	6.492	36.79	38.17	39.55	40.93	42.30	45.06	51.67	54.98	56.08	58.84	65.73	67.11	75.10	76.75
1.029	34	5.965	35	6.141	37.34	38.72	40.10	41.48	42.85	45.61	52.22	55.53	56.63	59.39	66.28	67.66	75.65	77.30
1.029	35	6.141	36	6.316	37.07	38.45	39.82	41.20	42.58	45.34	51.95	55.26	56.36	59.11	66.00	67.38	75.37	77.03
1.030	33	5.790	34	5.965	37.62	39.00	40.37	41.75	43.13	45.89	52.50	55.81	56.91	59.66	66.55	67.93	75.92	77.58
1.031	32	5.614	33	5.790	37.89	39.27	40.65	42.03	43.40	46.16	52.77	56.08	57.18	59.94	66.83	68.21	76.20	77.85
1.032	31	5.439	32	5.614	38.17	39.55	40.92	42.30	43.68	46.44	53.05	56.36	57.46	60.21	67.10	68.48	76.47	78.13
1.033	30	5.263	31	5.439	38.44	39.82	41.20	42.58	43.95	46.71	53.32	56.63	57.73	60.49	67.38	68.76	76.75	78.40
1.034	29	5.088	30	5.263	38.72	40.10	41.48	42.86	44.23	46.99	53.60	56.91	58.01	60.77	67.66	69.04	77.03	78.68
1.036	28	4.912	29	5.088	39.00	40.38	41.75	43.13	44.51	47.27	53.88	57.19	58.29	61.04	67.93	69.31	77.30	78.96
1.042	48	8.421	50	8.772	33.35	34.73	36.10	37.48	38.86	41.62	48.23	51.54	52.64	55.39	62.28	63.66	71.65	73.31
1.047	43	7.544	45	7.895	34.72	36.10	37.48	38.86	40.23	42.99	49.60	52.91	54.01	56.77	63.66	65.04	73.03	74.68
1.050	60	10.527	63	11.053	29.90	31.28	32.66	34.04	35.41	38.17	44.78	48.09	49.19	51.95	58.84	60.22	68.21	69.86
1.053	38	6.667	40	7.018	36.10	37.48	38.86	40.24	41.61	44.37	50.98	54.29	55.39	58.15	65.04	66.42	74.41	76.06
1.054	37	6.492	39	6.842	36.38	37.76	39.13	40.51	41.89	44.65	51.26	54.57	55.67	58.42	65.31	66.69	74.68	76.34
1.056	36	6.316	38	6.667	36.65	38.03	39.41	40.79	42.16	44.92	51.53	54.84	55.94	58.70	65.59	66.97	74.96	76.61
1.056	71	12.457	75	13.158	26.73	28.11	29.48	30.87	32.24	35.00	41.61	44.92	46.02	48.78	55.67	57.05	65.04	66.69
1.057	35	6.141	37	6.492	36.93	38.31	39.68	41.06	42.44	45.20	51.81	55.12	56.22	58.97	65.86	67.24	75.23	76.89
1.057	53	9.299	56	9.825	31.83	33.21	34.58	35.96	37.34	40.10	46.71	50.02	51.12	53.87	60.76	62.14	70.13	71.79
1.059	34	5.965	36	6.316	37.20	38.58	39.96	41.34	42.71	45.47	52.08	55.39	56.49	59.25	66.14	67.52	75.51	77.16
1.060	50	8.772	53	9.299	32.66	34.04	35.41	36.79	38.17	40.93	47.54	50.85	51.95	54.70	61.59	62.97	70.96	72.62
1.060	67	11.755	71	12.457	27.83	29.21	30.59	31.97	33.34	36.10	42.71	46.02	47.12	49.88	56.77	58.15	66.14	67.79
1.061	33	5.790	35	6.141	37.48	38.86	40.23	41.61	42.99	45.75	52.36	55.67	56.77	59.52	66.41	67.79	75.78	77.44
1.063	32	5.614	34	5.965	37.76	39.14	40.51	41.89	43.27	46.03	52.64	55.95	57.05	59.80	66.69	68.07	76.06	77.72
1.063	63	11.053	67	11.755	28.93	30.31	31.69	33.07	34.44	37.20	43.82	47.13	48.23	50.98	57.87	59.25	67.24	68.90
1.065	31	5.439	33	5.790	38.03	39.41	40.79	42.17	43.54	46.30	52.91	56.22	57.32	60.08	66.97	68.35	76.34	77.99
1.067	30	5.263	32	5.614	38.31	39.69	41.06	42.44	43.82	46.58	53.19	56.50	57.60	60.35	67.24	68.62	76.61	78.27
1.067	45	7.895	48	8.421	34.03	35.41	36.79	38.17	39.54	42.30	48.91	52.22	53.32	56.08	62.97	64.35	72.34	73.99
1.067	75	13.158	80	14.036	25.49	26.87	28.24	29.62	31.00	33.76	40.37	43.68	44.78	47.53	54.43	55.81	63.80	65.45
1.069	29	5.088	31	5.439	38.58	39.96	41.34	42.72	44.09	46.85	53.46	56.77	57.87	60.63	67.52	68.90	76.89	78.54
1.071	28	4.912	30	5.263	38.86	40.24	41.61	42.99	44.37	47.13	53.74	57.05	58.15	60.90	67.79	69.17	77.16	78.82
1.071	56	9.825	60	10.527	30.86	32.24	33.62	35.00	36.37	39.13	45.74	49.05	50.15	52.91	59.80	61.18	69.17	70.82
1.075	40	7.018	43	7.544	35.41	36.79	38.17	39.55	40.92	43.68	50.29	53.60	54.70	57.46	64.35	65.73	73.72	75.37
1.081	37	6.492	40	7.018	36.24	37.62	38.99	40.37	41.75	44.51	51.12	54.43	55.53	58.28	65.17	66.55	74.54	76.20
1.083	36	6.316	39	6.842	36.51	37.89	39.27	40.65	42.02	44.78	51.40	54.71	55.81	58.56	65.45	66.83	74.82	76.48
1.086	35	6.141	38	6.667	36.79	38.17	39.54	40.92	42.30	45.06	51.67	54.98	56.08	58.84	65.73	67.11	75.10	76.75
1.088	34	5.965	37	6.492	37.07	38.45	39.82	41.20	42.58	45.34	51.95	55.26	56.36	59.11	66.00	67.38	75.37	77.03
1.091	33	5.790	36	6.316	37.34	38.72	40.10	41.48	42.85	45.61	52.22	55.53	56.63	59.39	66.28	67.66	75.65	77.30
1.094	32	5.614	35	6.141	37.62	39.00	40.37	41.75	43.13	45.89	52.50	55.81	56.91	59.66	66.55	67.93	75.92	77.58
1.097	31	5.439	34	5.965	37.89	39.27	40.65	42.03	43.40	46.16	52.77	56.08	57.18	59.94	66.83	68.21	76.20	77.85
1.100	30	5.263	33	5.790	38.17	39.55	40.92	42.30	43.68	46.44	53.05	56.36	57.46	60.21	67.10	68.48	76.47	78.13
1.103	29	5.088	32	5.614	38.44	39.82	41.20	42.58	43.95	46.71	53.32	56.63	57.73	60.49	67.38	68.76	76.75	78.40
1.103	39	6.842	43	7.544	35.55	36.93	38.30	39.68	41.06	43.82	50.43	53.74	54.84	57.60	64.49	65.87	73.86	75.51
1.104	48	8.421	53	9.299	32.93	34.31	35.69	37.07	38.44	41.20	47.81	51.12	52.22	54.98	61.87	63.25	71.24	72.89
Length Factor*					**1.01**	**1.02**	**1.03**	**1.04**	**1.05**	**1.07**	**1.12**	**1.14**	**1.14**	**1.16**	**1.19**	**1.20**	**1.24**	**1.25**

* The length correction factor must be used to determine the proper belt width.

14M HT500 Selection Table

Speed Ratio	Sprocket Combinations				Center Distance, Inches												
	Driver		Driven		994-14MX	1120-14MX	1190-14MX	1260-14MX	1400-14MX	1568-14MX	1610-14MX	1750-14MX	1890-14MX	1960-14MX	2100-14MX	2240-14MX	2310-14MX
	No. of Teeth	Pitch Dia. Inches	No. of Teeth	Pitch Dia. Inches													
Length Factor*					**0.68**	**0.73**	**0.75**	**0.77**	**0.81**	**0.85**	**0.86**	**0.89**	**0.92**	**0.94**	**0.96**	**0.99**	**1.00**
1.107	28	4.912	31	5.439	11.43	13.91	15.29	16.67	19.43	22.73	23.56	26.32	29.07	30.45	33.21	35.96	37.34
1.111	36	6.316	40	7.018	9.09	11.57	12.95	14.33	17.08	20.39	21.22	23.97	26.73	28.11	30.87	33.62	35.00
1.111	45	7.895	50	8.772			10.33	11.71	14.46	17.77	18.60	21.36	24.11	25.49	28.25	31.00	32.38
1.114	35	6.141	39	6.842	9.36	11.84	13.22	14.60	17.36	20.67	21.50	24.25	27.01	28.39	31.14	33.90	35.27
1.116	43	7.544	48	8.421		9.50	10.88	12.26	15.01	18.32	19.15	21.91	24.66	26.04	28.80	31.55	32.93
1.117	60	10.527	67	11.755						13.35	14.18	16.94	19.70	21.08	23.83	26.59	27.96
1.118	34	5.965	38	6.667	9.64	12.12	13.50	14.88	17.64	20.94	21.77	24.53	27.28	28.66	31.42	34.17	35.55
1.119	67	11.755	75	13.158								14.87	17.62	19.01	21.76	24.52	25.89
1.120	50	8.772	56	9.825				10.19	12.94	16.25	17.08	19.84	22.59	23.97	26.73	29.48	30.86
1.121	33	5.790	37	6.492	9.91	12.39	13.77	15.15	17.91	21.22	22.05	24.80	27.56	28.94	31.69	34.45	35.82
1.125	32	5.614	36	6.316	10.19	12.67	14.05	15.43	18.19	21.49	22.32	25.08	27.83	29.21	31.97	34.72	36.10
1.125	40	7.018	45	7.895		10.32	11.70	13.09	15.84	19.15	19.98	22.73	25.49	26.87	29.62	32.38	33.75
1.125	56	9.825	63	11.053					11.15	14.45	15.29	18.04	20.80	22.18	24.93	27.69	29.07
1.125	80	14.036	90	15.790											17.89	20.65	22.03
1.127	63	11.053	71	12.457							13.21	15.97	18.73	20.11	22.86	25.62	27.00
1.127	71	12.457	80	14.036									16.38	17.76	20.52	23.27	24.65
1.129	31	5.439	35	6.141	10.46	12.95	14.33	15.71	18.46	21.77	22.60	25.35	28.11	29.49	32.24	35.00	36.37
1.132	38	6.667	43	7.544	8.39	10.87	12.26	13.64	16.39	19.70	20.53	23.28	26.04	27.42	30.18	32.93	34.31
1.132	53	9.299	60	10.527					11.97	15.28	16.11	18.87	21.62	23.01	25.76	28.52	29.89
1.133	30	5.263	34	5.965	10.74	13.22	14.60	15.98	18.74	22.04	22.87	25.63	28.38	29.76	32.52	35.27	36.65
1.138	29	5.088	33	5.790	11.02	13.50	14.88	16.26	19.01	22.32	23.15	25.90	28.66	30.04	32.79	35.55	36.92
1.143	28	4.912	32	5.614	11.29	13.77	15.15	16.53	19.29	22.60	23.43	26.18	28.94	30.32	33.07	35.83	37.20
1.143	35	6.141	40	7.018	9.22	11.70	13.08	14.46	17.22	20.53	21.36	24.11	26.87	28.25	31.00	33.76	35.13
1.147	34	5.965	39	6.842	9.50	11.98	13.36	14.74	17.50	20.80	21.63	24.39	27.14	28.52	31.28	34.03	35.41
1.152	33	5.790	38	6.667	9.77	12.25	13.63	15.01	17.77	21.08	21.91	24.66	27.42	28.80	31.55	34.31	35.68
1.154	39	6.842	45	7.895		10.46	11.84	13.22	15.98	19.28	20.11	22.87	25.63	27.01	29.76	32.52	33.89
1.156	32	5.614	37	6.492	10.05	12.53	13.91	15.29	18.05	21.35	22.18	24.94	27.69	29.07	31.83	34.58	35.96
1.161	31	5.439	36	6.316	10.32	12.81	14.19	15.57	18.32	21.63	22.46	25.21	27.97	29.35	32.10	34.86	36.23
1.162	37	6.492	43	7.544	8.52	11.01	12.39	13.77	16.53	19.83	20.66	23.42	26.18	27.56	30.31	33.07	34.44
1.163	43	7.544	50	8.772		9.21	10.59	11.97	14.73	18.04	18.87	21.63	24.38	25.76	28.52	31.27	32.65
1.167	30	5.263	35	6.141	10.60	13.08	14.46	15.84	18.60	21.90	22.73	25.49	28.24	29.63	32.38	35.14	36.51
1.167	48	8.421	56	9.825				10.45	13.21	16.52	17.35	20.11	22.86	24.24	27.00	29.76	31.13
1.172	29	5.088	34	5.965	10.88	13.36	14.74	16.12	18.87	22.18	23.01	25.77	28.52	29.90	32.66	35.41	36.79
1.176	34	5.965	40	7.018	9.35	11.84	13.22	14.60	17.36	20.66	21.49	24.25	27.00	28.38	31.14	33.89	35.27
1.178	45	7.895	53	9.299			9.90	11.28	14.04	17.35	18.18	20.93	23.69	25.07	27.83	30.58	31.96
1.179	28	4.912	33	5.790	11.15	13.63	15.01	16.39	19.15	22.46	23.29	26.04	28.80	30.18	32.93	35.69	37.06
1.182	33	5.790	39	6.842	9.63	12.11	13.49	14.87	17.63	20.94	21.77	24.52	27.28	28.66	31.41	34.17	35.54
1.183	60	10.527	71	12.457						12.78	13.61	16.37	19.13	20.51	23.27	26.03	27.40
1.184	38	6.667	45	7.895	8.10	10.59	11.97	13.35	16.11	19.42	20.25	23.00	25.76	27.14	29.90	32.65	34.03
1.188	32	5.614	38	6.667	9.91	12.39	13.77	15.15	17.91	21.21	22.04	24.80	27.55	28.93	31.69	34.45	35.82
1.189	53	9.299	63	11.053					11.54	14.85	15.69	18.44	21.20	22.58	25.34	28.10	29.47
1.190	63	11.053	75	13.158								15.40	18.16	19.54	22.30	25.06	26.43
1.194	31	5.439	37	6.492	10.18	12.66	14.04	15.43	18.18	21.49	22.32	25.07	27.83	29.21	31.97	34.72	36.10
1.194	36	6.316	43	7.544	8.66	11.14	12.52	13.91	16.66	19.97	20.80	23.56	26.31	27.69	30.45	33.20	34.58
1.194	67	11.755	80	14.036								14.15	16.91	18.29	21.05	23.81	25.19
1.196	56	9.825	67	11.755						13.88	14.71	17.47	20.23	21.61	24.37	27.13	28.50
1.200	30	5.263	36	6.316	10.46	12.94	14.32	15.70	18.46	21.76	22.59	25.35	28.11	29.49	32.24	35.00	36.37
1.200	40	7.018	48	8.421		9.89	11.28	12.66	15.42	18.73	19.56	22.31	25.07	26.45	29.21	31.96	33.34
1.200	50	8.772	60	10.527					12.37	15.68	16.51	19.27	22.03	23.41	26.17	28.92	30.30
1.200	75	13.158	90	15.790										15.79	18.56	21.32	22.70
1.207	29	5.088	35	6.141	10.73	13.22	14.60	15.98	18.73	22.04	22.87	25.63	28.38	29.76	32.52	35.27	36.65
1.212	33	5.790	40	7.018	9.49	11.97	13.35	14.73	17.49	20.80	21.63	24.38	27.14	28.52	31.27	34.03	35.41
1.214	28	4.912	34	5.965	11.01	13.49	14.87	16.25	19.01	22.32	23.15	25.90	28.66	30.04	32.79	35.55	36.92
1.216	37	6.492	45	7.895	8.24	10.72	12.11	13.49	16.25	19.55	20.38	23.14	25.90	27.28	30.03	32.79	34.16
1.219	32	5.614	39	6.842	9.76	12.25	13.63	15.01	17.77	21.07	21.90	24.66	27.42	28.80	31.55	34.31	35.68
1.226	31	5.439	38	6.667	10.04	12.52	13.90	15.28	18.04	21.35	22.18	24.93	27.69	29.07	31.83	34.58	35.96
1.229	35	6.141	43	7.544	8.79	11.28	12.66	14.04	16.80	20.10	20.94	23.69	26.45	27.83	30.58	33.34	34.71
1.231	39	6.842	48	8.421		10.03	11.41	12.79	15.55	18.86	19.69	22.45	25.21	26.59	29.34	32.10	33.47
1.233	30	5.263	37	6.492	10.31	12.80	14.18	15.56	18.32	21.62	22.45	25.21	27.97	29.35	32.10	34.86	36.23
1.233	43	7.544	53	9.299			10.16	11.54	14.30	17.61	18.45	21.20	23.96	25.34	28.10	30.85	32.23
1.241	29	5.088	36	6.316	10.59	13.07	14.46	15.84	18.59	21.90	22.73	25.49	28.24	29.62	32.38	35.13	36.51
1.244	45	7.895	56	9.825				10.84	13.61	16.92	17.75	20.51	23.27	24.65	27.41	30.16	31.54
1.250	28	4.912	35	6.141	10.87	13.35	14.73	16.11	18.87	22.18	23.01	25.76	28.52	29.90	32.65	35.41	36.78
1.250	32	5.614	40	7.018	9.62	12.10	13.49	14.87	17.62	20.93	21.76	24.52	27.27	28.66	31.41	34.17	35.54
1.250	36	6.316	45	7.895	8.37	10.85	12.24	13.62	16.38	19.69	20.52	23.28	26.03	27.41	30.17	32.92	34.30
1.250	40	7.018	50	8.772		9.60	10.99	12.37	15.13	18.44	19.27	22.03	24.79	26.17	28.93	31.68	33.06
1.250	48	8.421	60	10.527					12.63	15.95	16.78	19.54	22.30	23.68	26.44	29.19	30.57
1.250	60	10.527	75	13.158							13.03	15.79	18.56	19.94	22.70	25.46	26.84
1.258	31	5.439	39	6.842	9.89	12.38	13.76	15.14	17.90	21.21	22.04	24.79	27.55	28.93	31.69	34.44	35.82
1.260	50	8.772	63	11.053					11.93	15.25	16.08	18.84	21.60	22.99	25.74	28.50	29.88
1.263	38	6.667	48	8.421		10.16	11.54	12.93	15.69	18.99	19.83	22.58	25.34	26.72	29.48	32.23	33.61
Length Factor*					**0.68**	**0.73**	**0.75**	**0.77**	**0.81**	**0.85**	**0.86**	**0.89**	**0.92**	**0.94**	**0.96**	**0.99**	**1.00**

* The length correction factor must be used to determine the proper belt width.

SELECTION

14M HT500 Selection Table (Continued)

Speed Ratio	Sprocket Combinations: Driver No. of Teeth	Driver Pitch Dia. Inches	Driven No. of Teeth	Driven Pitch Dia. Inches	Center Distance, Inches: 2380-14MX	2450-14MX	2520-14MX	2590-14MX	2660-14MX	2800-14MX	3136-14MX	3304-14MX	3360-14MX	3500-14MX	3850-14MX	3920-14MX	4326-14MX	4410-14MX
Length Factor*					**1.01**	**1.02**	**1.03**	**1.04**	**1.05**	**1.07**	**1.12**	**1.14**	**1.14**	**1.16**	**1.19**	**1.20**	**1.24**	**1.25**
1.107	28	4.912	31	5.439	38.72	40.10	41.47	42.85	44.23	46.99	53.60	56.91	58.01	60.76	67.65	69.03	77.02	78.68
1.111	36	6.316	40	7.018	36.38	37.76	39.13	40.51	41.89	44.65	51.26	54.57	55.67	58.42	65.31	66.69	74.68	76.34
1.111	45	7.895	50	8.772	33.76	35.14	36.51	37.89	39.27	42.03	48.64	51.95	53.05	55.80	62.69	64.07	72.06	73.72
1.114	35	6.141	39	6.842	36.65	38.03	39.41	40.79	42.16	44.92	51.53	54.84	55.94	58.70	65.59	66.97	74.96	76.61
1.116	43	7.544	48	8.421	34.31	35.69	37.06	38.44	39.82	42.58	49.19	52.50	53.60	56.35	63.24	64.62	72.61	74.27
1.117	60	10.527	67	11.755	29.34	30.72	32.10	33.48	34.85	37.61	44.23	47.54	48.64	51.39	58.28	59.66	67.65	69.31
1.118	34	5.965	38	6.667	36.93	38.31	39.68	41.06	42.44	45.20	51.81	55.12	56.22	58.97	65.86	67.24	75.23	76.89
1.119	67	11.755	75	13.158	27.27	28.65	30.03	31.41	32.79	35.55	42.16	45.47	46.57	49.32	56.21	57.59	65.58	67.24
1.120	50	8.772	56	9.825	32.24	33.62	34.99	36.38	37.75	40.51	47.12	50.43	51.53	54.29	61.18	62.56	70.55	72.20
1.121	33	5.790	37	6.492	37.20	38.58	39.96	41.34	42.71	45.47	52.08	55.39	56.49	59.25	66.14	67.52	75.51	77.16
1.125	32	5.614	36	6.316	37.48	38.86	40.23	41.61	42.99	45.75	52.36	55.67	56.77	59.52	66.41	67.79	75.78	77.44
1.125	40	7.018	45	7.895	35.13	36.51	37.89	39.27	40.64	43.41	50.02	53.33	54.43	57.18	64.07	65.45	73.44	75.10
1.125	56	9.825	63	11.053	30.45	31.83	33.20	34.58	35.96	38.72	45.33	48.64	49.74	52.49	59.38	60.76	68.75	70.41
1.125	80	14.036	90	15.790	23.41	24.79	26.17	27.55	28.92	31.68	38.29	41.61	42.71	45.46	52.35	53.73	61.72	63.38
1.127	63	11.053	71	12.457	28.38	29.76	31.13	32.51	33.89	36.65	43.26	46.57	47.67	50.43	57.32	58.70	66.69	68.34
1.127	71	12.457	80	14.036	26.03	27.41	28.79	30.17	31.54	34.30	40.91	44.23	45.33	48.08	54.97	56.35	64.34	66.00
1.129	31	5.439	35	6.141	37.75	39.13	40.51	41.89	43.26	46.02	52.63	55.94	57.04	59.80	66.69	68.07	76.06	77.71
1.132	38	6.667	43	7.544	35.69	37.07	38.44	39.82	41.20	43.96	50.57	53.88	54.98	57.73	64.62	66.00	73.99	75.65
1.132	53	9.299	60	10.527	31.27	32.65	34.03	35.41	36.78	39.54	46.15	49.46	50.56	53.32	60.21	61.59	69.58	71.24
1.133	30	5.263	34	5.965	38.03	39.41	40.79	42.17	43.54	46.30	52.91	56.22	57.32	60.08	66.97	68.35	76.34	77.99
1.138	29	5.088	33	5.790	38.30	39.68	41.06	42.44	43.82	46.58	53.19	56.50	57.60	60.35	67.24	68.62	76.61	78.27
1.143	28	4.912	32	5.614	38.58	39.96	41.34	42.72	44.09	46.85	53.46	56.77	57.87	60.63	67.52	68.90	76.89	78.54
1.143	35	6.141	40	7.018	36.51	37.89	39.27	40.65	42.02	44.78	51.39	54.70	55.80	58.56	65.45	66.83	74.82	76.47
1.147	34	5.965	39	6.842	36.79	38.17	39.54	40.92	42.30	45.06	51.67	54.98	56.08	58.83	65.72	67.10	75.10	76.75
1.152	33	5.790	38	6.667	37.06	38.44	39.82	41.20	42.57	45.33	51.94	55.25	56.35	59.11	66.00	67.38	75.37	77.03
1.154	39	6.842	45	7.895	35.27	36.65	38.03	39.41	40.78	43.54	50.15	53.46	54.56	57.32	64.21	65.59	73.58	75.23
1.156	32	5.614	37	6.492	37.34	38.72	40.09	41.47	42.85	45.61	52.22	55.53	56.63	59.39	66.28	67.66	75.65	77.30
1.161	31	5.439	36	6.316	37.62	39.00	40.37	41.75	43.13	45.89	52.50	55.81	56.91	59.66	66.55	67.93	75.92	77.58
1.162	37	6.492	43	7.544	35.82	37.20	38.58	39.96	41.33	44.09	50.70	54.01	55.11	57.87	64.76	66.14	74.13	75.78
1.163	43	7.544	50	8.772	34.03	35.41	36.79	38.17	39.54	42.30	48.91	52.22	53.32	56.08	62.97	64.35	72.34	73.99
1.167	30	5.263	35	6.141	37.89	39.27	40.65	42.03	43.40	46.16	52.77	56.08	57.18	59.94	66.83	68.21	76.20	77.85
1.167	48	8.421	56	9.825	32.51	33.89	35.27	36.65	38.02	40.78	47.39	50.70	51.80	54.56	61.45	62.83	70.82	72.48
1.172	29	5.088	34	5.965	38.17	39.55	40.92	42.30	43.68	46.44	53.05	56.36	57.46	60.21	67.10	68.48	76.47	78.13
1.176	34	5.965	40	7.018	36.65	38.03	39.40	40.78	42.16	44.92	51.53	54.84	55.94	58.70	65.59	66.97	74.96	76.61
1.178	45	7.895	53	9.299	33.34	34.72	36.09	37.47	38.85	41.61	48.22	51.53	52.63	55.39	62.28	63.66	71.65	73.30
1.179	28	4.912	33	5.790	38.44	39.82	41.20	42.58	43.95	46.71	53.32	56.63	57.73	60.49	67.38	68.76	76.75	78.40
1.182	33	5.790	39	6.842	36.93	38.31	39.68	41.06	42.44	45.20	51.81	55.12	56.22	58.97	65.86	67.24	75.23	76.89
1.183	60	10.527	71	12.457	28.78	30.16	31.54	32.92	34.29	37.06	43.67	46.98	48.08	50.83	57.73	59.11	67.10	68.75
1.184	38	6.667	45	7.895	35.41	36.79	38.16	39.54	40.92	43.68	50.29	53.60	54.70	57.45	64.35	65.73	73.72	75.37
1.188	32	5.614	38	6.667	37.20	38.58	39.96	41.34	42.71	45.47	52.08	55.39	56.49	59.25	66.14	67.52	75.51	77.16
1.189	53	9.299	63	11.053	30.85	32.23	33.61	34.99	36.37	39.13	45.74	49.05	50.15	52.90	59.79	61.17	69.17	70.82
1.190	63	11.053	75	13.158	27.81	29.20	30.57	31.95	33.33	36.09	42.70	46.01	47.11	49.87	56.76	58.14	66.13	67.79
1.194	31	5.439	37	6.492	37.48	38.86	40.23	41.61	42.99	45.75	52.36	55.67	56.77	59.52	66.41	67.79	75.78	77.44
1.194	36	6.316	43	7.544	35.96	37.34	38.71	40.09	41.47	44.23	50.84	54.15	55.25	58.01	64.90	66.28	74.27	75.92
1.194	67	11.755	80	14.036	26.57	27.95	29.33	30.71	32.08	34.85	41.46	44.77	45.87	48.63	55.52	56.90	64.89	66.54
1.196	56	9.825	67	11.755	29.89	31.27	32.64	34.02	35.40	38.16	44.77	48.08	49.18	51.94	58.83	60.21	68.20	69.85
1.200	30	5.263	36	6.316	37.75	39.13	40.51	41.89	43.26	46.02	52.63	55.94	57.04	59.80	66.69	68.07	76.06	77.71
1.200	40	7.018	48	8.421	34.72	36.10	37.47	38.85	40.23	42.99	49.60	52.91	54.01	56.76	63.66	65.04	73.03	74.68
1.200	50	8.772	60	10.527	31.68	33.06	34.44	35.82	37.19	39.95	46.56	49.87	50.98	53.73	60.62	62.00	69.99	71.65
1.200	75	13.158	90	15.790	24.08	25.46	26.84	28.22	29.60	32.36	38.97	42.28	43.38	46.14	53.03	54.41	62.41	64.06
1.207	29	5.088	35	6.141	38.03	39.41	40.78	42.16	43.54	46.30	52.91	56.22	57.32	60.07	66.96	68.34	76.33	77.99
1.212	33	5.790	40	7.018	36.79	38.17	39.54	40.92	42.30	45.06	51.67	54.98	56.08	58.83	65.72	67.10	75.09	76.75
1.214	28	4.912	34	5.965	38.30	39.68	41.06	42.44	43.81	46.57	53.18	56.49	57.59	60.35	67.24	68.62	76.61	78.27
1.216	37	6.492	45	7.895	35.54	36.92	38.30	39.68	41.05	43.81	50.43	53.74	54.84	57.59	64.48	65.86	73.85	75.51
1.219	32	5.614	39	6.842	37.06	38.44	39.82	41.20	42.57	45.33	51.94	55.25	56.35	59.11	66.00	67.38	75.37	77.02
1.226	31	5.439	38	6.667	37.34	38.72	40.09	41.47	42.85	45.61	52.22	55.53	56.63	59.38	66.27	67.65	75.64	77.30
1.229	35	6.141	43	7.544	36.10	37.48	38.85	40.23	41.61	44.37	50.98	54.29	55.39	58.14	65.03	66.41	74.40	76.06
1.231	39	6.842	48	8.421	34.85	36.23	37.61	38.99	40.36	43.13	49.74	53.05	54.15	56.90	63.79	65.17	73.16	74.82
1.233	30	5.263	37	6.492	37.61	38.99	40.37	41.75	43.12	45.88	52.49	55.80	56.90	59.66	66.55	67.93	75.92	77.58
1.233	43	7.544	53	9.299	33.61	34.99	36.37	37.75	39.12	41.88	48.49	51.80	52.90	55.66	62.55	63.93	71.92	73.58
1.241	29	5.088	36	6.316	37.89	39.27	40.64	42.02	43.40	46.16	52.77	56.08	57.18	59.94	66.83	68.21	76.20	77.85
1.244	45	7.895	56	9.825	32.92	34.30	35.67	37.06	38.43	41.19	47.80	51.11	52.21	54.97	61.86	63.24	71.23	72.89
1.250	28	4.912	35	6.141	38.16	39.54	40.92	42.30	43.67	46.43	53.05	56.36	57.46	60.21	67.10	68.48	76.47	78.13
1.250	32	5.614	40	7.018	36.92	38.30	39.68	41.06	42.43	45.19	51.80	55.11	56.21	58.97	65.86	67.24	75.23	76.89
1.250	36	6.316	45	7.895	35.68	37.06	38.44	39.82	41.19	43.95	50.56	53.87	54.97	57.73	64.62	66.00	73.99	75.64
1.250	40	7.018	50	8.772	34.44	35.82	37.19	38.57	39.95	42.71	49.32	52.63	53.73	56.49	63.38	64.76	72.75	74.40
1.250	48	8.421	60	10.527	31.95	33.33	34.71	36.09	37.46	40.22	46.84	50.15	51.25	54.00	60.89	62.27	70.27	71.92
1.250	60	10.527	75	13.158	28.22	29.60	30.97	32.36	33.73	36.49	43.11	46.42	47.52	50.28	57.17	58.55	66.54	68.20
1.258	31	5.439	39	6.842	37.20	38.58	39.95	41.33	42.71	45.47	52.08	55.39	56.49	59.25	66.14	67.52	75.51	77.16
1.260	50	8.772	63	11.053	31.26	32.64	34.02	35.40	36.77	39.53	46.15	49.46	50.56	53.31	60.20	61.58	69.58	71.23
1.263	38	6.667	48	8.421	34.99	36.37	37.74	39.13	40.50	43.26	49.87	53.18	54.28	57.04	63.93	65.31	73.30	74.95
Length Factor*					**1.01**	**1.02**	**1.03**	**1.04**	**1.05**	**1.07**	**1.12**	**1.14**	**1.14**	**1.16**	**1.19**	**1.20**	**1.24**	**1.25**

* The length correction factor must be used to determine the proper belt width.

14M HT500 Selection Table

Speed Ratio	Sprocket Combinations: Driver No. of Teeth	Driver Pitch Dia. Inches	Driven No. of Teeth	Driven Pitch Dia. Inches	Center Distance, Inches: 994-14MX	1120-14MX	1190-14MX	1260-14MX	1400-14MX	1568-14MX	1610-14MX	1750-14MX	1890-14MX	1960-14MX	2100-14MX	2240-14MX	2310-14MX
Length Factor*					0.68	0.73	0.75	0.77	0.81	0.85	0.86	0.89	0.92	0.94	0.96	0.99	1.00
1.264	53	9.299	67	11.755						14.28	15.11	17.87	20.63	22.01	24.77	27.53	28.91
1.265	34	5.965	43	7.544	8.92	11.41	12.79	14.17	16.93	20.24	21.07	23.83	26.58	27.96	30.72	33.48	34.85
1.267	30	5.263	38	6.667	10.17	12.66	14.04	15.42	18.18	21.48	22.31	25.07	27.83	29.21	31.96	34.72	36.09
1.268	56	9.825	71	12.457						13.30	14.13	16.90	19.66	21.04	23.80	26.56	27.94
1.268	71	12.457	90	15.790									14.93	16.31	19.08	21.85	23.23
1.270	63	11.053	80	14.036								14.67	17.44	18.82	21.58	24.34	25.72
1.276	29	5.088	37	6.492	10.45	12.93	14.31	15.69	18.45	21.76	22.59	25.35	28.10	29.48	32.24	34.99	36.37
1.282	39	6.842	50	8.772		9.73	11.12	12.50	15.27	18.58	19.41	22.17	24.92	26.30	29.06	31.82	33.19
1.286	28	4.912	36	6.316	10.72	13.21	14.59	15.97	18.73	22.04	22.87	25.62	28.38	29.76	32.51	35.27	36.64
1.286	35	6.141	45	7.895	8.50	10.99	12.37	13.75	16.51	19.82	20.65	23.41	26.17	27.55	30.30	33.06	34.43
1.290	31	5.439	40	7.018	9.75	12.24	13.62	15.00	17.76	21.07	21.90	24.65	27.41	28.79	31.55	34.30	35.68
1.297	37	6.492	48	8.421		10.29	11.67	13.06	15.82	19.13	19.96	22.72	25.47	26.86	29.61	32.37	33.74
1.300	30	5.263	39	6.842	10.03	12.51	13.90	15.28	18.04	21.34	22.17	24.93	27.69	29.07	31.82	34.58	35.95
1.302	43	7.544	56	9.825			9.72	11.10	13.87	17.19	18.02	20.78	23.54	24.92	27.67	30.43	31.81
1.303	33	5.790	43	7.544	9.05	11.54	12.92	14.31	17.06	20.37	21.20	23.96	26.72	28.10	30.86	33.61	34.99
1.310	29	5.088	38	6.667	10.30	12.79	14.17	15.55	18.31	21.62	22.45	25.21	27.96	29.34	32.10	34.85	36.23
1.313	48	8.421	63	11.053					12.19	15.51	16.35	19.11	21.87	23.25	26.01	28.77	30.15
1.316	38	6.667	50	8.772		9.86	11.25	12.64	15.40	18.71	19.54	22.30	25.06	26.44	29.20	31.95	33.33
1.321	28	4.912	37	6.492	10.58	13.06	14.45	15.83	18.59	21.89	22.72	25.48	28.24	29.62	32.37	35.13	36.50
1.324	34	5.965	45	7.895	8.63	11.12	12.50	13.89	16.65	19.96	20.79	23.54	26.30	27.68	30.44	33.20	34.57
1.325	40	7.018	53	9.299		9.16	10.55	11.94	14.70	18.01	18.85	21.60	24.36	25.74	28.50	31.26	32.63
1.333	30	5.263	40	7.018	9.88	12.37	13.75	15.13	17.89	21.20	22.03	24.79	27.55	28.93	31.68	34.44	35.81
1.333	36	6.316	48	8.421		10.42	11.80	13.19	15.95	19.26	20.09	22.85	25.61	26.99	29.75	32.50	33.88
1.333	45	7.895	60	10.527				10.25	13.02	16.34	17.18	19.94	22.70	24.08	26.84	29.60	30.97
1.333	60	10.527	80	14.036								15.06	17.83	19.21	21.98	24.74	26.12
1.339	56	9.825	75	13.158						12.70	13.54	16.31	19.08	20.47	23.23	25.99	27.37
1.340	50	8.772	67	11.755					11.34	14.67	15.50	18.27	21.03	22.41	25.17	27.93	29.31
1.340	53	9.299	71	12.457						13.69	14.52	17.29	20.06	21.44	24.20	26.96	28.34
1.343	67	11.755	90	15.790									15.44	16.83	19.60	22.37	23.75
1.344	32	5.614	43	7.544	9.18	11.67	13.06	14.44	17.20	20.51	21.34	24.10	26.85	28.23	30.99	33.75	35.12
1.345	29	5.088	39	6.842	10.16	12.64	14.03	15.41	18.17	21.48	22.31	25.06	27.82	29.20	31.96	34.71	36.09
1.351	37	6.492	50	8.772		9.99	11.38	12.77	15.53	18.84	19.67	22.43	25.19	26.57	29.33	32.09	33.46
1.357	28	4.912	38	6.667	10.43	12.92	14.30	15.69	18.45	21.75	22.58	25.34	28.10	29.48	32.23	34.99	36.37
1.359	39	6.842	53	9.299		9.29	10.68	12.07	14.83	18.15	18.98	21.74	24.50	25.88	28.64	31.39	32.77
1.364	33	5.790	45	7.895	8.75	11.25	12.63	14.02	16.78	20.09	20.92	23.68	26.44	27.82	30.57	33.33	34.71
1.371	35	6.141	48	8.421	8.05	10.55	11.93	13.32	16.08	19.39	20.23	22.98	25.74	27.12	29.88	32.64	34.01
1.379	29	5.088	40	7.018	10.01	12.50	13.88	15.27	18.03	21.34	22.17	24.92	27.68	29.06	31.82	34.57	35.95
1.387	31	5.439	43	7.544	9.31	11.80	13.19	14.57	17.33	20.64	21.47	24.23	26.99	28.37	31.13	33.88	35.26
1.389	36	6.316	50	8.772		10.12	11.51	12.90	15.66	18.98	19.81	22.57	25.33	26.71	29.46	32.22	33.60
1.393	28	4.912	39	6.842	10.29	12.78	14.16	15.54	18.30	21.61	22.44	25.20	27.96	29.34	32.09	34.85	36.23
1.395	38	6.667	53	9.299		9.41	10.81	12.19	14.96	18.28	19.11	21.87	24.63	26.01	28.77	31.53	32.90
1.395	43	7.544	60	10.527				10.51	13.28	16.61	17.44	20.20	22.96	24.35	27.11	29.86	31.24
1.396	48	8.421	67	11.755					11.59	14.93	15.76	18.53	21.29	22.68	25.44	28.20	29.58
1.400	40	7.018	56	9.825			10.10	11.49	14.26	17.58	18.41	21.18	23.94	25.32	28.08	30.83	32.21
1.400	45	7.895	63	11.053					12.58	15.90	16.74	19.50	22.27	23.65	26.41	29.17	30.55
1.400	80	14.036	112	19.650												17.41	18.80
1.406	32	5.614	45	7.895	8.88	11.38	12.76	14.15	16.91	20.22	21.05	23.81	26.57	27.95	30.71	33.47	34.84
1.412	34	5.965	48	8.421	8.17	10.68	12.06	13.45	16.21	19.53	20.36	23.12	25.88	27.26	30.02	32.77	34.15
1.415	53	9.299	75	13.158						13.08	13.92	16.70	19.47	20.86	23.62	26.39	27.77
1.420	50	8.772	71	12.457						14.07	14.91	17.68	20.45	21.83	24.60	27.36	28.74
1.429	28	4.912	40	7.018	10.14	12.63	14.02	15.40	18.16	21.47	22.30	25.06	27.82	29.20	31.95	34.71	36.08
1.429	35	6.141	50	8.772		10.25	11.64	13.03	15.79	19.11	19.94	22.70	25.46	26.84	29.60	32.36	33.73
1.429	56	9.825	80	14.036							12.78	15.57	18.34	19.73	22.50	25.27	26.65
1.429	63	11.053	90	15.790									15.95	17.34	20.12	22.89	24.27
1.432	37	6.492	53	9.299		9.54	10.93	12.32	15.09	18.41	19.24	22.00	24.76	26.15	28.90	31.66	33.04
1.433	30	5.263	43	7.544	9.44	11.93	13.32	14.70	17.46	20.78	21.61	24.36	27.12	28.50	31.26	34.02	35.39
1.436	39	6.842	56	9.825			10.23	11.62	14.39	17.71	18.54	21.31	24.07	25.45	28.21	30.97	32.35
1.452	31	5.439	45	7.895	9.01	11.51	12.89	14.28	17.04	20.36	21.19	23.95	26.70	28.09	30.84	33.60	34.98
1.455	33	5.790	48	8.421	8.30	10.80	12.19	13.58	16.35	19.66	20.49	23.25	26.01	27.39	30.15	32.91	34.28
1.465	43	7.544	63	11.053				10.05	12.83	16.16	17.00	19.77	22.53	23.91	26.68	29.44	30.81
1.471	34	5.965	50	8.772		10.38	11.77	13.16	15.92	19.24	20.07	22.83	25.59	26.97	29.73	32.49	33.87
1.472	36	6.316	53	9.299		9.67	11.06	12.45	15.22	18.54	19.37	22.14	24.90	26.28	29.04	31.80	33.17
1.474	38	6.667	56	9.825		8.95	10.35	11.75	14.52	17.84	18.68	21.44	24.20	25.58	28.34	31.10	32.48
1.479	48	8.421	71	12.457						14.33	15.16	17.94	20.71	22.10	24.86	27.62	29.00
1.483	29	5.088	43	7.544	9.56	12.06	13.45	14.83	17.60	20.91	21.74	24.50	27.26	28.64	31.39	34.15	35.53
1.489	45	7.895	67	11.755					11.97	15.31	16.15	18.92	21.69	23.07	25.83	28.60	29.97
1.493	75	13.158	112	19.650												18.03	19.43
1.500	30	5.263	45	7.895	9.14	11.64	13.02	14.41	17.18	20.49	21.32	24.08	26.84	28.22	30.98	33.74	35.11
1.500	32	5.614	48	8.421	8.42	10.93	12.32	13.71	16.48	19.79	20.62	23.38	26.14	27.53	30.28	33.04	34.42
1.500	40	7.018	60	10.527			9.48	10.88	13.67	16.99	17.83	20.60	23.36	24.74	27.50	30.26	31.64
1.500	50	8.772	75	13.158						13.46	14.30	17.09	19.86	21.25	24.02	26.78	28.16
1.500	60	10.527	90	15.790								13.52	16.32	17.72	20.50	23.28	24.66
Length Factor*					0.68	0.73	0.75	0.77	0.81	0.85	0.86	0.89	0.92	0.94	0.96	0.99	1.00

* The length correction factor must be used to determine the proper belt width.

SELECTION

14M HT500 Selection Table (Continued)

Speed Ratio	Sprocket Combinations: Driver No. of Teeth	Driver Pitch Dia. Inches	Driven No. of Teeth	Driven Pitch Dia. Inches	Center Distance, Inches: 2380-14MX	2450-14MX	2520-14MX	2590-14MX	2660-14MX	2800-14MX	3136-14MX	3304-14MX	3360-14MX	3500-14MX	3850-14MX	3920-14MX	4326-14MX	4410-14MX
Length Factor*					**1.01**	**1.02**	**1.03**	**1.04**	**1.05**	**1.07**	**1.12**	**1.14**	**1.14**	**1.16**	**1.19**	**1.20**	**1.24**	**1.25**
1.264	53	9.299	67	11.755	30.29	31.67	33.05	34.43	35.80	38.56	45.18	48.49	49.59	52.34	59.24	60.62	68.61	70.26
1.265	34	5.965	43	7.544	36.23	37.61	38.99	40.37	41.74	44.50	51.11	54.42	55.52	58.28	65.17	66.55	74.54	76.20
1.267	30	5.263	38	6.667	37.47	38.85	40.23	41.61	42.98	45.74	52.36	55.67	56.77	59.52	66.41	67.79	75.78	77.44
1.268	56	9.825	71	12.457	29.32	30.70	32.08	33.46	34.83	37.60	44.21	47.52	48.62	51.38	58.27	59.65	67.64	69.30
1.268	71	12.457	90	15.790	24.61	25.99	27.37	28.75	30.13	32.89	39.51	42.82	43.92	46.68	53.57	54.95	62.95	64.60
1.270	63	11.053	80	14.036	27.10	28.49	29.86	31.24	32.62	35.38	42.00	45.31	46.41	49.17	56.06	57.44	65.43	67.09
1.276	29	5.088	37	6.492	37.75	39.13	40.50	41.88	43.26	46.02	52.63	55.94	57.04	59.80	66.69	68.07	76.06	77.71
1.282	39	6.842	50	8.772	34.57	35.95	37.33	38.71	40.09	42.85	49.46	52.77	53.87	56.62	63.51	64.89	72.89	74.54
1.286	28	4.912	36	6.316	38.03	39.41	40.78	42.16	43.54	46.30	52.91	56.22	57.32	60.07	66.96	68.34	76.33	77.99
1.286	35	6.141	45	7.895	35.82	37.20	38.57	39.95	41.33	44.09	50.70	54.01	55.11	57.86	64.76	66.14	74.13	75.78
1.290	31	5.439	40	7.018	37.06	38.44	39.81	41.19	42.57	45.33	51.94	55.25	56.35	59.11	66.00	67.38	75.37	77.02
1.297	37	6.492	48	8.421	35.12	36.50	37.88	39.26	40.64	43.40	50.01	53.32	54.42	57.17	64.07	65.45	73.44	75.09
1.300	30	5.263	39	6.842	37.33	38.71	40.09	41.47	42.85	45.61	52.22	55.53	56.63	59.38	66.27	67.65	75.64	77.30
1.302	43	7.544	56	9.825	33.19	34.57	35.95	37.33	38.70	41.46	48.07	51.39	52.49	55.24	62.13	63.51	71.50	73.16
1.303	33	5.790	43	7.544	36.37	37.75	39.12	40.50	41.88	44.64	51.25	54.56	55.66	58.42	65.31	66.69	74.68	76.33
1.310	29	5.088	38	6.667	37.61	38.99	40.36	41.75	43.12	45.88	52.49	55.80	56.90	59.66	66.55	67.93	75.92	77.57
1.313	48	8.421	63	11.053	31.53	32.91	34.28	35.67	37.04	39.80	46.42	49.73	50.83	53.58	60.48	61.86	69.85	71.50
1.316	38	6.667	50	8.772	34.71	36.09	37.46	38.84	40.22	42.98	49.59	52.90	54.00	56.76	63.65	65.03	73.02	74.68
1.321	28	4.912	37	6.492	37.89	39.27	40.64	42.02	43.40	46.16	52.77	56.08	57.18	59.93	66.82	68.20	76.19	77.85
1.324	34	5.965	45	7.895	35.95	37.33	38.71	40.09	41.46	44.22	50.84	54.15	55.25	58.00	64.89	66.27	74.26	75.92
1.325	40	7.018	53	9.299	34.02	35.40	36.77	38.15	39.53	42.29	48.90	52.21	53.31	56.07	62.96	64.34	72.33	73.99
1.333	30	5.263	40	7.018	37.19	38.57	39.95	41.33	42.71	45.47	52.08	55.39	56.49	59.24	66.13	67.51	75.50	77.16
1.333	36	6.316	48	8.421	35.26	36.64	38.02	39.40	40.77	43.53	50.14	53.46	54.56	57.31	64.20	65.58	73.57	75.23
1.333	45	7.895	60	10.527	32.35	33.74	35.11	36.49	37.87	40.63	47.24	50.55	51.65	54.41	61.30	62.68	70.67	72.33
1.333	60	10.527	80	14.036	27.50	28.88	30.26	31.64	33.02	35.79	42.40	45.71	46.82	49.57	56.47	57.85	65.84	67.50
1.339	56	9.825	75	13.158	28.75	30.13	31.51	32.89	34.27	37.03	43.65	46.96	48.06	50.82	57.71	59.09	67.08	68.74
1.340	50	8.772	67	11.755	30.69	32.07	33.45	34.83	36.21	38.97	45.58	48.90	50.00	52.75	59.64	61.02	69.02	70.67
1.340	53	9.299	71	12.457	29.72	31.10	32.48	33.86	35.24	38.00	44.61	47.93	49.03	51.78	58.68	60.06	68.05	69.70
1.343	67	11.755	90	15.790	25.14	26.52	27.90	29.28	30.66	33.43	40.05	43.36	44.46	47.22	54.11	55.49	63.49	65.14
1.344	32	5.614	43	7.544	36.50	37.88	39.26	40.64	42.01	44.78	51.39	54.70	55.80	58.55	65.44	66.82	74.81	76.47
1.345	29	5.088	39	6.842	37.47	38.85	40.23	41.61	42.98	45.74	52.35	55.66	56.76	59.52	66.41	67.79	75.78	77.44
1.351	37	6.492	50	8.772	34.84	36.22	37.60	38.98	40.36	43.12	49.73	53.04	54.14	56.90	63.79	65.17	73.16	74.81
1.357	28	4.912	38	6.667	37.75	39.13	40.50	41.88	43.26	46.02	52.63	55.94	57.04	59.79	66.69	68.07	76.06	77.71
1.359	39	6.842	53	9.299	34.15	35.53	36.91	38.29	39.66	42.43	49.04	52.35	53.45	56.20	63.10	64.48	72.47	74.12
1.364	33	5.790	45	7.895	36.09	37.47	38.84	40.22	41.60	44.36	50.97	54.28	55.38	58.14	65.03	66.41	74.40	76.05
1.371	35	6.141	48	8.421	35.39	36.78	38.15	39.53	40.91	43.67	50.28	53.59	54.69	57.45	64.34	65.72	73.71	75.36
1.379	29	5.088	40	7.018	37.33	38.71	40.09	41.47	42.84	45.60	52.21	55.52	56.62	59.38	66.27	67.65	75.64	77.30
1.387	31	5.439	43	7.544	36.64	38.02	39.39	40.77	42.15	44.91	51.52	54.83	55.93	58.69	65.58	66.96	74.95	76.61
1.389	36	6.316	50	8.772	34.98	36.36	37.73	39.12	40.49	43.25	49.86	53.18	54.28	57.03	63.92	65.30	73.29	74.95
1.393	28	4.912	39	6.842	37.61	38.99	40.36	41.74	43.12	45.88	52.49	55.80	56.90	59.66	66.55	67.93	75.92	77.57
1.395	38	6.667	53	9.299	34.29	35.67	37.04	38.42	39.80	42.56	49.17	52.48	53.58	56.34	63.23	64.61	72.60	74.26
1.395	43	7.544	60	10.527	32.62	34.00	35.38	36.76	38.14	40.90	47.51	50.83	51.93	54.68	61.57	62.95	70.95	72.60
1.396	48	8.421	67	11.755	30.96	32.34	33.72	35.10	36.48	39.24	45.85	49.17	50.27	53.02	59.92	61.30	69.29	70.94
1.400	40	7.018	56	9.825	33.59	34.97	36.35	37.73	39.11	41.87	48.48	51.79	52.89	55.65	62.54	63.92	71.91	73.57
1.400	45	7.895	63	11.053	31.93	33.31	34.69	36.07	37.44	40.21	46.82	50.13	51.23	53.99	60.88	62.26	70.26	71.91
1.400	80	14.036	112	19.650	20.20	21.59	22.98	24.37	25.75	28.52	35.16	38.48	39.58	42.35	49.25	50.63	58.63	60.29
1.406	32	5.614	45	7.895	36.22	37.60	38.98	40.36	41.73	44.50	51.11	54.42	55.52	58.27	65.17	66.55	74.54	76.19
1.412	34	5.965	48	8.421	35.53	36.91	38.29	39.67	41.04	43.80	50.42	53.73	54.83	57.58	64.47	65.85	73.85	75.50
1.415	53	9.299	75	13.158	29.15	30.53	31.91	33.29	34.67	37.43	44.05	47.36	48.46	51.22	58.12	59.50	67.49	69.15
1.420	50	8.772	71	12.457	30.12	31.50	32.88	34.26	35.64	38.40	45.02	48.33	49.43	52.19	59.08	60.46	68.46	70.11
1.429	28	4.912	40	7.018	37.47	38.85	40.22	41.60	42.98	45.74	52.35	55.66	56.76	59.52	66.41	67.79	75.78	77.43
1.429	35	6.141	50	8.772	35.11	36.49	37.87	39.25	40.63	43.39	50.00	53.31	54.41	57.17	64.06	65.44	73.43	75.09
1.429	56	9.825	80	14.036	28.03	29.41	30.79	32.18	33.55	36.32	42.94	46.25	47.35	50.11	57.01	58.39	66.38	68.04
1.429	63	11.053	90	15.790	25.66	27.04	28.42	29.81	31.19	33.95	40.58	43.89	45.00	47.75	54.65	56.03	64.03	65.68
1.432	37	6.492	53	9.299	34.42	35.80	37.18	38.56	39.93	42.69	49.31	52.62	53.72	56.48	63.37	64.75	72.74	74.39
1.433	30	5.263	43	7.544	36.77	38.15	39.53	40.91	42.29	45.05	51.66	54.97	56.07	58.83	65.72	67.10	75.09	76.74
1.436	39	6.842	56	9.825	33.73	35.11	36.48	37.87	39.24	42.00	48.62	51.93	53.03	55.78	62.68	64.06	72.05	73.70
1.452	31	5.439	45	7.895	36.36	37.74	39.11	40.49	41.87	44.63	51.24	54.55	55.65	58.41	65.30	66.68	74.67	76.33
1.455	33	5.790	48	8.421	35.66	37.05	38.42	39.80	41.18	43.94	50.55	53.86	54.96	57.72	64.61	65.99	73.98	75.64
1.465	43	7.544	63	11.053	32.20	33.58	34.95	36.34	37.71	40.48	47.09	50.40	51.50	54.26	61.15	62.53	70.53	72.18
1.471	34	5.965	50	8.772	35.25	36.63	38.00	39.39	40.76	43.52	50.14	53.45	54.55	57.30	64.20	65.58	73.57	75.22
1.472	36	6.316	53	9.299	34.55	35.94	37.31	38.69	40.07	42.83	49.44	52.75	53.86	56.61	63.50	64.88	72.88	74.53
1.474	38	6.667	56	9.825	33.86	35.24	36.62	38.00	39.38	42.14	48.75	52.06	53.16	55.92	62.81	64.19	72.18	73.84
1.479	48	8.421	71	12.457	30.39	31.77	33.15	34.53	35.91	38.67	45.29	48.60	49.70	52.46	59.35	60.73	68.73	70.38
1.483	29	5.088	43	7.544	36.91	38.29	39.66	41.05	42.42	45.18	51.79	55.11	56.21	58.96	65.85	67.23	75.22	76.88
1.489	45	7.895	67	11.755	31.36	32.74	34.12	35.50	36.88	39.64	46.26	49.57	50.67	53.43	60.32	61.70	69.70	71.35
1.493	75	13.158	112	19.650	20.83	22.23	23.61	25.01	26.39	29.17	35.82	39.14	40.24	43.01	49.91	51.29	59.30	60.96
1.500	30	5.263	45	7.895	36.49	37.87	39.25	40.63	42.01	44.77	51.38	54.69	55.79	58.55	65.44	66.82	74.81	76.46
1.500	32	5.614	48	8.421	35.80	37.18	38.56	39.94	41.31	44.07	50.69	54.00	55.10	57.85	64.75	66.13	74.12	75.77
1.500	40	7.018	60	10.527	33.02	34.41	35.78	37.16	38.54	41.30	47.92	51.23	52.33	55.09	61.98	63.36	71.35	73.01
1.500	50	8.772	75	13.158	29.54	30.93	32.31	33.69	35.07	37.83	44.45	47.77	48.87	51.62	58.52	59.90	67.90	69.55
1.500	60	10.527	90	15.790	26.05	27.43	28.82	30.20	31.58	34.35	40.98	44.29	45.39	48.15	55.05	56.43	64.43	66.09
Length Factor*					**1.01**	**1.02**	**1.03**	**1.04**	**1.05**	**1.07**	**1.12**	**1.14**	**1.14**	**1.16**	**1.19**	**1.20**	**1.24**	**1.25**

* The length correction factor must be used to determine the proper belt width.

14M HT500 Selection Table

Speed Ratio	Sprocket Combinations: Driver No. of Teeth	Driver Pitch Dia. Inches	Driven No. of Teeth	Driven Pitch Dia. Inches	Center Distance, Inches: 994-14MX	1120-14MX	1190-14MX	1260-14MX	1400-14MX	1568-14MX	1610-14MX	1750-14MX	1890-14MX	1960-14MX	2100-14MX	2240-14MX	2310-14MX
Length Factor*					0.68	0.73	0.75	0.77	0.81	0.85	0.86	0.89	0.92	0.94	0.96	0.99	1.00
1.509	53	9.299	80	14.036							13.15	15.95	18.73	20.12	22.89	25.66	27.04
1.514	35	6.141	53	9.299		9.79	11.19	12.58	15.35	18.67	19.50	22.27	25.03	26.41	29.17	31.93	33.31
1.514	37	6.492	56	9.825		9.08	10.48	11.87	14.65	17.97	18.81	21.57	24.33	25.72	28.48	31.24	32.61
1.515	33	5.790	50	8.772	7.99	10.50	11.89	13.28	16.05	19.37	20.20	22.96	25.72	27.11	29.87	32.62	34.00
1.536	28	4.912	43	7.544	9.69	12.19	13.58	14.96	17.73	21.04	21.87	24.63	27.39	28.77	31.53	34.29	35.66
1.538	39	6.842	60	10.527			9.61	11.01	13.80	17.12	17.96	20.73	23.49	24.88	27.64	30.40	31.78
1.548	31	5.439	48	8.421	8.55	11.06	12.45	13.84	16.61	19.92	20.76	23.52	26.28	27.66	30.42	33.18	34.55
1.552	29	5.088	45	7.895	9.26	11.76	13.15	14.54	17.31	20.62	21.45	24.21	26.97	28.35	31.11	33.87	35.25
1.556	36	6.316	56	9.825		9.20	10.60	12.00	14.78	18.10	18.94	21.70	24.46	25.85	28.61	31.37	32.75
1.558	43	7.544	67	11.755					12.22	15.56	16.40	19.18	21.95	23.33	26.10	28.86	30.24
1.559	34	5.965	53	9.299		9.92	11.31	12.71	15.48	18.80	19.64	22.40	25.16	26.54	29.30	32.06	33.44
1.563	32	5.614	50	8.772	8.11	10.63	12.02	13.41	16.18	19.50	20.33	23.10	25.86	27.24	30.00	32.76	34.13
1.563	48	8.421	75	13.158						13.71	14.55	17.34	20.12	21.51	24.28	27.04	28.42
1.575	40	7.018	63	11.053				10.42	13.21	16.55	17.38	20.16	22.92	24.31	27.07	29.83	31.21
1.577	71	12.457	112	19.650												18.53	19.93
1.578	45	7.895	71	12.457					11.35	14.70	15.54	18.32	21.10	22.48	25.25	28.02	29.40
1.579	38	6.667	60	10.527			9.73	11.13	13.92	17.25	18.09	20.86	23.62	25.01	27.77	30.53	31.91
1.600	30	5.263	48	8.421	8.67	11.19	12.58	13.97	16.74	20.06	20.89	23.65	26.41	27.79	30.55	33.31	34.69
1.600	35	6.141	56	9.825		9.32	10.73	12.13	14.91	18.23	19.07	21.83	24.60	25.98	28.74	31.50	32.88
1.600	50	8.772	80	14.036						12.68	13.52	16.32	19.11	20.50	23.28	26.05	27.43
1.606	33	5.790	53	9.299		10.04	11.44	12.83	15.61	18.93	19.77	22.53	25.29	26.68	29.44	32.20	33.57
1.607	28	4.912	45	7.895	9.39	11.89	13.28	14.67	17.44	20.75	21.58	24.35	27.11	28.49	31.25	34.00	35.38
1.607	56	9.825	90	15.790								14.01	16.82	18.22	21.01	23.79	25.18
1.613	31	5.439	50	8.772	8.23	10.75	12.15	13.54	16.31	19.63	20.47	23.23	25.99	27.37	30.13	32.89	34.27
1.615	39	6.842	63	11.053				10.54	13.34	16.68	17.51	20.29	23.05	24.44	27.20	29.97	31.34
1.622	37	6.492	60	10.527			9.85	11.26	14.05	17.38	18.22	20.99	23.75	25.14	27.90	30.66	32.04
1.647	34	5.965	56	9.825		9.45	10.85	12.25	15.03	18.36	19.20	21.96	24.73	26.11	28.87	31.63	33.01
1.651	43	7.544	71	12.457					11.59	14.95	15.79	18.58	21.35	22.74	25.51	28.28	29.66
1.655	29	5.088	48	8.421	8.80	11.31	12.71	14.10	16.87	20.19	21.02	23.78	26.54	27.93	30.68	33.44	34.82
1.656	32	5.614	53	9.299		10.16	11.57	12.96	15.74	19.06	19.90	22.66	25.43	26.81	29.57	32.33	33.71
1.658	38	6.667	63	11.053				10.66	13.46	16.80	17.64	20.41	23.18	24.57	27.33	30.10	31.48
1.667	30	5.263	50	8.772	8.36	10.88	12.28	13.67	16.44	19.76	20.60	23.36	26.12	27.51	30.27	33.03	34.40
1.667	36	6.316	60	10.527			9.97	11.38	14.17	17.51	18.35	21.12	23.88	25.27	28.03	30.79	32.17
1.667	45	7.895	75	13.158						14.08	14.93	17.72	20.50	21.89	24.66	27.43	28.81
1.667	48	8.421	80	14.036						12.92	13.77	16.57	19.36	20.76	23.53	26.31	27.69
1.672	67	11.755	112	19.650											16.19	19.02	20.42
1.675	40	7.018	67	11.755					12.59	15.94	16.78	19.56	22.34	23.72	26.49	29.25	30.63
1.697	33	5.790	56	9.825		9.57	10.98	12.38	15.16	18.49	19.33	22.09	24.86	26.24	29.01	31.77	33.14
1.698	53	9.299	90	15.790								14.38	17.19	18.60	21.39	24.17	25.56
1.703	37	6.492	63	11.053				10.78	13.59	16.93	17.77	20.54	23.31	24.70	27.47	30.23	31.61
1.710	31	5.439	53	9.299		10.29	11.69	13.09	15.87	19.19	20.03	22.79	25.56	26.94	29.70	32.46	33.84
1.714	28	4.912	48	8.421	8.92	11.44	12.83	14.22	17.00	20.32	21.15	23.91	26.68	28.06	30.82	33.58	34.95
1.714	35	6.141	60	10.527			10.09	11.50	14.30	17.64	18.47	21.25	24.01	25.40	28.16	30.93	32.30
1.718	39	6.842	67	11.755					12.72	16.07	16.91	19.69	22.46	23.85	26.62	29.39	30.77
1.724	29	5.088	50	8.772	8.48	11.00	12.40	13.80	16.57	19.89	20.73	23.49	26.25	27.64	30.40	33.16	34.54
1.744	43	7.544	75	13.158						14.33	15.18	17.97	20.76	22.15	24.92	27.69	29.08
1.750	32	5.614	56	9.825		9.69	11.10	12.50	15.29	18.62	19.46	22.22	24.99	26.38	29.14	31.90	33.28
1.750	36	6.316	63	11.053			9.49	10.91	13.71	17.06	17.90	20.67	23.44	24.83	27.60	30.36	31.74
1.750	80	14.036	140	24.562													
1.763	38	6.667	67	11.755				10.01	12.84	16.20	17.04	19.82	22.59	23.98	26.75	29.52	30.90
1.765	34	5.965	60	10.527			10.22	11.63	14.43	17.77	18.60	21.38	24.14	25.53	28.30	31.06	32.44
1.767	30	5.263	53	9.299		10.41	11.82	13.21	16.00	19.32	20.16	22.92	25.69	27.07	29.83	32.60	33.97
1.775	40	7.018	71	12.457					11.95	15.33	16.17	18.96	21.74	23.13	25.90	28.67	30.05
1.778	45	7.895	80	14.036						13.28	14.14	16.95	19.74	21.14	23.92	26.69	28.08
1.778	63	11.053	112	19.650											16.67	19.51	20.91
1.786	28	4.912	50	8.772	8.60	11.13	12.53	13.92	16.70	20.02	20.86	23.62	26.39	27.77	30.53	33.29	34.67
1.800	35	6.141	63	11.053			9.61	11.03	13.84	17.19	18.02	20.80	23.57	24.96	27.73	30.49	31.87
1.800	50	8.772	90	15.790								14.74	17.56	18.97	21.77	24.55	25.94
1.806	31	5.439	56	9.825		9.81	11.22	12.63	15.42	18.75	19.58	22.35	25.12	26.51	29.27	32.03	33.41
1.811	37	6.492	67	11.755				10.13	12.96	16.32	17.16	19.94	22.72	24.11	26.88	29.65	31.03
1.818	33	5.790	60	10.527		8.91	10.34	11.75	14.55	17.89	18.73	21.50	24.27	25.66	28.43	31.19	32.57
1.821	39	6.842	71	12.457					12.07	15.45	16.30	19.09	21.87	23.26	26.03	28.80	30.18
1.828	29	5.088	53	9.299	7.99	10.53	11.94	13.34	16.12	19.45	20.29	23.05	25.82	27.20	29.97	32.73	34.11
1.853	34	5.965	63	11.053			9.72	11.15	13.96	17.31	18.15	20.93	23.70	25.09	27.86	30.62	32.00
1.860	43	7.544	80	14.036						13.52	14.38	17.19	19.99	21.39	24.17	26.95	28.33
1.861	36	6.316	67	11.755				10.25	13.08	16.45	17.29	20.07	22.85	24.24	27.01	29.78	31.16
1.867	30	5.263	56	9.825		9.93	11.34	12.75	15.54	18.88	19.71	22.48	25.25	26.64	29.40	32.16	33.54
1.867	60	10.527	112	19.650											17.02	19.87	21.28
1.867	75	13.158	140	24.562													
1.868	38	6.667	71	12.457					12.19	15.58	16.42	19.21	21.99	23.39	26.16	28.93	30.31
Length Factor*					0.68	0.73	0.75	0.77	0.81	0.85	0.86	0.89	0.92	0.94	0.96	0.99	1.00

* The length correction factor must be used to determine the proper belt width.

SELECTION

14M HT500 Selection Table (Continued)

Speed Ratio	Sprocket Combinations: Driver No. of Teeth	Driver Pitch Dia. Inches	Driven No. of Teeth	Driven Pitch Dia. Inches	Center Distance, Inches: 2380-14MX	2450-14MX	2520-14MX	2590-14MX	2660-14MX	2800-14MX	3136-14MX	3304-14MX	3360-14MX	3500-14MX	3850-14MX	3920-14MX	4326-14MX	4410-14MX
Length Factor*					**1.01**	**1.02**	**1.03**	**1.04**	**1.05**	**1.07**	**1.12**	**1.14**	**1.14**	**1.16**	**1.19**	**1.20**	**1.24**	**1.25**
1.509	53	9.299	80	14.036	28.42	29.81	31.19	32.57	33.95	36.72	43.34	46.65	47.75	50.51	57.41	58.79	66.79	68.44
1.514	35	6.141	53	9.299	34.69	36.07	37.45	38.83	40.20	42.96	49.58	52.89	53.99	56.75	63.64	65.02	73.01	74.67
1.514	37	6.492	56	9.825	33.99	35.38	36.75	38.13	39.51	42.27	48.89	52.20	53.30	56.05	62.95	64.33	72.32	73.98
1.515	33	5.790	50	8.772	35.38	36.76	38.14	39.52	40.90	43.66	50.27	53.58	54.68	57.44	64.33	65.71	73.70	75.36
1.536	28	4.912	43	7.544	37.04	38.42	39.80	41.18	42.56	45.32	51.93	55.24	56.34	59.10	65.99	67.37	75.36	77.02
1.538	39	6.842	60	10.527	33.16	34.54	35.92	37.30	38.67	41.44	48.05	51.37	52.47	55.22	62.12	63.50	71.49	73.15
1.548	31	5.439	48	8.421	35.93	37.31	38.69	40.07	41.45	44.21	50.82	54.13	55.23	57.99	64.88	66.26	74.25	75.91
1.552	29	5.088	45	7.895	36.63	38.01	39.38	40.76	42.14	44.90	51.51	54.83	55.93	58.68	65.57	66.95	74.95	76.60
1.556	36	6.316	56	9.825	34.13	35.51	36.89	38.27	39.64	42.41	49.02	52.33	53.43	56.19	63.08	64.46	72.46	74.11
1.558	43	7.544	67	11.755	31.62	33.01	34.38	35.77	37.14	39.91	46.52	49.84	50.94	53.70	60.59	61.97	69.97	71.62
1.559	34	5.965	53	9.299	34.82	36.20	37.58	38.96	40.34	43.10	49.71	53.03	54.13	56.88	63.77	65.16	73.15	74.80
1.563	32	5.614	50	8.772	35.52	36.90	38.27	39.65	41.03	43.79	50.41	53.72	54.82	57.57	64.47	65.85	73.84	75.49
1.563	48	8.421	75	13.158	29.81	31.19	32.57	33.95	35.33	38.10	44.72	48.03	49.13	51.89	58.79	60.17	68.17	69.82
1.575	40	7.018	63	11.053	32.59	33.98	35.35	36.74	38.11	40.88	47.49	50.81	51.91	54.66	61.56	62.94	70.93	72.59
1.577	71	12.457	112	19.650	21.33	22.73	24.12	25.51	26.90	29.69	36.34	39.66	40.76	43.53	50.44	51.82	59.83	61.49
1.578	45	7.895	71	12.457	30.78	32.16	33.54	34.93	36.30	39.07	45.69	49.00	50.10	52.86	59.76	61.14	69.13	70.79
1.579	38	6.667	60	10.527	33.29	34.67	36.05	37.43	38.81	41.57	48.19	51.50	52.60	55.36	62.25	63.63	71.62	73.28
1.600	30	5.263	48	8.421	36.07	37.45	38.83	40.21	41.58	44.34	50.96	54.27	55.37	58.13	65.02	66.40	74.39	76.05
1.600	35	6.141	56	9.825	34.26	35.64	37.02	38.40	39.78	42.54	49.16	52.47	53.57	56.33	63.22	64.60	72.59	74.25
1.600	50	8.772	80	14.036	28.82	30.20	31.58	32.97	34.35	37.11	43.74	47.05	48.15	50.91	57.81	59.19	67.19	68.85
1.606	33	5.790	53	9.299	34.96	36.34	37.71	39.09	40.47	43.23	49.85	53.16	54.26	57.02	63.91	65.29	73.28	74.94
1.607	28	4.912	45	7.895	36.76	38.14	39.52	40.90	42.28	45.04	51.65	54.96	56.06	58.82	65.71	67.09	75.08	76.74
1.607	56	9.825	90	15.790	26.56	27.95	29.34	30.72	32.10	34.87	41.50	44.82	45.93	48.69	55.59	56.97	64.97	66.63
1.613	31	5.439	50	8.772	35.65	37.03	38.41	39.79	41.16	43.93	50.54	53.85	54.95	57.71	64.60	65.98	73.97	75.63
1.615	39	6.842	63	11.053	32.73	34.11	35.49	36.87	38.25	41.01	47.63	50.94	52.04	54.80	61.69	63.08	71.07	72.72
1.622	37	6.492	60	10.527	33.42	34.80	36.18	37.56	38.94	41.70	48.32	51.63	52.73	55.49	62.39	63.77	71.76	73.42
1.647	34	5.965	56	9.825	34.39	35.78	37.15	38.54	39.91	42.67	49.29	52.60	53.70	56.46	63.35	64.73	72.73	74.38
1.651	43	7.544	71	12.457	31.04	32.43	33.81	35.19	36.57	39.33	45.96	49.27	50.37	53.13	60.03	61.41	69.40	71.06
1.655	29	5.088	48	8.421	36.20	37.58	38.96	40.34	41.72	44.48	51.09	54.40	55.51	58.26	65.15	66.53	74.53	76.18
1.656	32	5.614	53	9.299	35.09	36.47	37.85	39.23	40.61	43.37	49.98	53.30	54.40	57.15	64.05	65.43	73.42	75.07
1.658	38	6.667	63	11.053	32.86	34.24	35.62	37.00	38.38	41.14	47.76	51.08	52.18	54.93	61.83	63.21	71.20	72.86
1.667	30	5.263	50	8.772	35.78	37.17	38.54	39.92	41.30	44.06	50.68	53.99	55.09	57.85	64.74	66.12	74.11	75.77
1.667	36	6.316	60	10.527	33.56	34.94	36.32	37.70	39.07	41.84	48.46	51.77	52.87	55.63	62.52	63.90	71.90	73.55
1.667	45	7.895	75	13.158	30.20	31.59	32.96	34.35	35.73	38.50	45.12	48.43	49.54	52.29	59.19	60.57	68.57	70.23
1.667	48	8.421	80	14.036	29.08	30.46	31.84	33.23	34.61	37.38	44.00	47.32	48.42	51.18	58.08	59.46	67.46	69.12
1.672	67	11.755	112	19.650	21.83	23.23	24.62	26.02	27.41	30.20	36.85	40.18	41.29	44.05	50.97	52.35	60.36	62.02
1.675	40	7.018	67	11.755	32.02	33.40	34.78	36.16	37.54	40.31	46.93	50.24	51.34	54.10	60.99	62.38	70.37	72.03
1.697	33	5.790	56	9.825	34.53	35.91	37.29	38.67	40.05	42.81	49.42	52.74	53.84	56.60	63.49	64.87	72.86	74.52
1.698	53	9.299	90	15.790	26.95	28.34	29.72	31.11	32.49	35.27	41.90	45.22	46.32	49.08	55.99	57.37	65.37	67.03
1.703	37	6.492	63	11.053	32.99	34.37	35.75	37.14	38.51	41.28	47.90	51.21	52.31	55.07	61.96	63.34	71.34	72.99
1.710	31	5.439	53	9.299	35.22	36.60	37.98	39.36	40.74	43.50	50.12	53.43	54.53	57.29	64.18	65.56	73.55	75.21
1.714	28	4.912	48	8.421	36.34	37.72	39.09	40.48	41.85	44.61	51.23	54.54	55.64	58.40	65.29	66.67	74.66	76.32
1.714	35	6.141	60	10.527	33.69	35.07	36.45	37.83	39.21	41.97	48.59	51.90	53.00	55.76	62.66	64.04	72.03	73.69
1.718	39	6.842	67	11.755	32.15	33.53	34.91	36.30	37.67	40.44	47.06	50.37	51.48	54.23	61.13	62.51	70.51	72.16
1.724	29	5.088	50	8.772	35.92	37.30	38.68	40.06	41.43	44.20	50.81	54.12	55.22	57.98	64.87	66.25	74.25	75.90
1.744	43	7.544	75	13.158	30.46	31.85	33.23	34.61	35.99	38.76	45.38	48.70	49.80	52.56	59.46	60.84	68.84	70.49
1.750	32	5.614	56	9.825	34.66	36.04	37.42	38.80	40.18	42.94	49.56	52.87	53.97	56.73	63.62	65.01	73.00	74.65
1.750	36	6.316	63	11.053	33.12	34.51	35.89	37.27	38.65	41.41	48.03	51.34	52.44	55.20	62.10	63.48	71.47	73.13
1.750	80	14.036	140	24.562				19.97	21.39	24.23	30.97	34.32	35.43	38.22	45.16	46.55	54.59	56.25
1.763	38	6.667	67	11.755	32.28	33.67	35.04	36.43	37.81	40.57	47.19	50.51	51.61	54.37	61.26	62.64	70.64	72.30
1.765	34	5.965	60	10.527	33.82	35.20	36.58	37.96	39.34	42.11	48.72	52.04	53.14	55.90	62.79	64.17	72.17	73.82
1.767	30	5.263	53	9.299	35.36	36.74	38.11	39.50	40.87	43.64	50.25	53.57	54.67	57.42	64.32	65.70	73.69	75.35
1.775	40	7.018	71	12.457	31.44	32.82	34.20	35.59	36.96	39.73	46.35	49.67	50.77	53.53	60.43	61.81	69.81	71.46
1.778	45	7.895	80	14.036	29.47	30.85	32.23	33.62	35.00	37.77	44.40	47.72	48.82	51.58	58.48	59.86	67.86	69.52
1.778	63	11.053	112	19.650	22.32	23.73	25.12	26.52	27.91	30.70	37.37	40.70	41.80	44.57	51.49	52.88	60.89	62.55
1.786	28	4.912	50	8.772	36.05	37.43	38.81	40.19	41.57	44.33	50.95	54.26	55.36	58.12	65.01	66.39	74.38	76.04
1.800	35	6.141	63	11.053	33.26	34.64	36.02	37.40	38.78	41.54	48.16	51.48	52.58	55.34	62.23	63.61	71.61	73.26
1.800	50	8.772	90	15.790	27.33	28.72	30.11	31.50	32.88	35.66	42.29	45.61	46.72	49.48	56.38	57.77	65.77	67.43
1.806	31	5.439	56	9.825	34.79	36.18	37.55	38.93	40.31	43.08	49.69	53.01	54.11	56.86	63.76	65.14	73.13	74.79
1.811	37	6.492	67	11.755	32.41	33.80	35.18	36.56	37.94	40.70	47.33	50.64	51.74	54.50	61.40	62.78	70.77	72.43
1.818	33	5.790	60	10.527	33.95	35.34	36.71	38.10	39.47	42.24	48.86	52.17	53.27	56.03	62.93	64.31	72.30	73.96
1.821	39	6.842	71	12.457	31.57	32.95	34.33	35.72	37.10	39.86	46.49	49.80	50.91	53.66	60.56	61.94	69.94	71.60
1.828	29	5.088	53	9.299	35.49	36.87	38.25	39.63	41.01	43.77	50.39	53.70	54.80	57.56	64.45	65.83	73.83	75.48
1.853	34	5.965	63	11.053	33.39	34.77	36.15	37.53	38.91	41.68	48.30	51.61	52.71	55.47	62.37	63.75	71.74	73.40
1.860	43	7.544	80	14.036	29.72	31.11	32.49	33.88	35.26	38.03	44.66	47.98	49.08	51.84	58.75	60.13	68.13	69.79
1.861	36	6.316	67	11.755	32.54	33.93	35.31	36.69	38.07	40.84	47.46	50.77	51.88	54.63	61.53	62.91	70.91	72.57
1.867	30	5.263	56	9.825	34.93	36.31	37.69	39.07	40.45	43.21	49.83	53.14	54.24	57.00	63.89	65.28	73.27	74.93
1.867	60	10.527	112	19.650	22.69	24.10	25.49	26.90	28.29	31.08	37.75	41.09	42.19	44.96	51.88	53.27	61.28	62.94
1.867	75	13.158	140	24.562				20.56	21.99	24.84	31.59	34.95	36.06	38.85	45.80	47.19	55.24	56.90
1.868	38	6.667	71	12.457	31.70	33.08	34.46	35.85	37.23	40.00	46.62	49.94	51.04	53.80	60.70	62.08	70.08	71.73
Length Factor*					**1.01**	**1.02**	**1.03**	**1.04**	**1.05**	**1.07**	**1.12**	**1.14**	**1.14**	**1.16**	**1.19**	**1.20**	**1.24**	**1.25**

* The length correction factor must be used to determine the proper belt width.

14M HT500 Selection Table

Speed Ratio	Sprocket Combinations				Center Distance, Inches												
	Driver		Driven		994-14MX	1120-14MX	1190-14MX	1260-14MX	1400-14MX	1568-14MX	1610-14MX	1750-14MX	1890-14MX	1960-14MX	2100-14MX	2240-14MX	2310-14MX
	No. of Teeth	Pitch Dia. Inches	No. of Teeth	Pitch Dia. Inches													
Length Factor*					**0.68**	**0.73**	**0.75**	**0.77**	**0.81**	**0.85**	**0.86**	**0.89**	**0.92**	**0.94**	**0.96**	**0.99**	**1.00**
1.875	32	5.614	60	10.527		9.03	10.46	11.87	14.68	18.02	18.86	21.63	24.40	25.79	28.56	31.32	32.70
1.875	40	7.018	75	13.158					11.29	14.70	15.54	18.35	21.14	22.53	25.31	28.08	29.46
1.875	48	8.421	90	15.790								14.98	17.81	19.22	22.02	24.81	26.20
1.893	28	4.912	53	9.299	8.11	10.66	12.06	13.46	16.25	19.58	20.42	23.18	25.95	27.34	30.10	32.86	34.24
1.909	33	5.790	63	11.053			9.84	11.27	14.09	17.44	18.28	21.06	23.83	25.22	27.99	30.75	32.13
1.914	35	6.141	67	11.755				10.37	13.21	16.57	17.41	20.20	22.98	24.37	27.14	29.91	31.29
1.919	37	6.492	71	12.457					12.31	15.70	16.54	19.34	22.12	23.51	26.29	29.06	30.44
1.923	39	6.842	75	13.158					11.41	14.82	15.67	18.47	21.26	22.66	25.44	28.21	29.59
1.931	29	5.088	56	9.825		10.05	11.47	12.87	15.67	19.00	19.84	22.61	25.38	26.77	29.53	32.30	33.67
1.935	31	5.439	60	10.527		9.15	10.58	11.99	14.80	18.15	18.98	21.76	24.53	25.92	28.69	31.45	32.83
1.969	32	5.614	63	11.053			9.96	11.39	14.21	17.56	18.40	21.18	23.96	25.35	28.12	30.88	32.27
1.971	34	5.965	67	11.755				10.49	13.33	16.70	17.54	20.33	23.11	24.50	27.27	30.04	31.42
1.972	36	6.316	71	12.457					12.43	15.82	16.67	19.46	22.25	23.64	26.42	29.19	30.57
1.972	71	12.457	140	24.562													
1.974	38	6.667	75	13.158					11.53	14.94	15.79	18.60	21.39	22.78	25.56	28.34	29.72
2.000	28	4.912	56	9.825		10.17	11.59	13.00	15.79	19.13	19.97	22.74	25.51	26.90	29.66	32.43	33.81
2.000	30	5.263	60	10.527		9.27	10.70	12.12	14.93	18.27	19.11	21.89	24.66	26.05	28.82	31.58	32.96
2.000	40	7.018	80	14.036						13.88	14.74	17.56	20.37	21.77	24.55	27.33	28.72
2.000	45	7.895	90	15.790							12.46	15.34	18.17	19.58	22.39	25.18	26.57
2.000	56	9.825	112	19.650											17.50	20.35	21.76
2.027	37	6.492	75	13.158					11.65	15.06	15.91	18.72	21.51	22.91	25.69	28.47	29.85
2.029	35	6.141	71	12.457					12.55	15.94	16.79	19.59	22.37	23.77	26.55	29.32	30.70
2.030	33	5.790	67	11.755				10.60	13.45	16.82	17.66	20.45	23.23	24.62	27.40	30.17	31.55
2.032	31	5.439	63	11.053			10.08	11.51	14.33	17.69	18.53	21.31	24.09	25.48	28.25	31.02	32.40
2.051	39	6.842	80	14.036						14.00	14.86	17.69	20.49	21.89	24.68	27.46	28.85
2.069	29	5.088	60	10.527		9.38	10.82	12.24	15.05	18.40	19.24	22.02	24.79	26.18	28.95	31.71	33.09
2.083	36	6.316	75	13.158					11.76	15.18	16.03	18.84	21.64	23.04	25.82	28.60	29.98
2.088	34	5.965	71	12.457					12.67	16.07	16.91	19.71	22.50	23.90	26.67	29.45	30.83
2.090	67	11.755	140	24.562													
2.093	43	7.544	90	15.790							12.69	15.57	18.42	19.83	22.64	25.43	26.83
2.094	32	5.614	67	11.755				10.72	13.57	16.94	17.79	20.58	23.36	24.75	27.53	30.30	31.68
2.100	30	5.263	63	11.053			10.20	11.63	14.45	17.81	18.66	21.44	24.22	25.61	28.38	31.15	32.53
2.100	80	14.036	168	29.475													
2.105	38	6.667	80	14.036						14.12	14.98	17.81	20.61	22.02	24.81	27.59	28.98
2.113	53	9.299	112	19.650										14.94	17.85	20.71	22.13
2.143	28	4.912	60	10.527		9.50	10.94	12.36	15.17	18.53	19.37	22.15	24.92	26.31	29.08	31.85	33.23
2.143	35	6.141	75	13.158					11.88	15.30	16.16	18.97	21.76	23.16	25.95	28.72	30.11
2.152	33	5.790	71	12.457				9.91	12.79	16.19	17.04	19.84	22.63	24.02	26.80	29.58	30.96
2.161	31	5.439	67	11.755			9.38	10.84	13.69	17.07	17.91	20.70	23.49	24.88	27.66	30.43	31.81
2.162	37	6.492	80	14.036						14.24	15.10	17.93	20.74	22.14	24.93	27.72	29.10
2.172	29	5.088	63	11.053		8.86	10.31	11.75	14.58	17.94	18.78	21.57	24.34	25.73	28.51	31.28	32.66
2.206	34	5.965	75	13.158					12.00	15.42	16.28	19.09	21.89	23.29	26.07	28.85	30.24
2.219	32	5.614	71	12.457				10.02	12.91	16.31	17.16	19.96	22.75	24.15	26.93	29.70	31.09
2.222	36	6.316	80	14.036					10.88	14.36	15.22	18.05	20.86	22.27	25.06	27.84	29.23
2.222	63	11.053	140	24.562													
2.233	30	5.263	67	11.755			9.50	10.95	13.81	17.19	18.04	20.83	23.62	25.01	27.78	30.56	31.94
2.240	50	8.772	112	19.650										15.28	18.20	21.07	22.49
2.240	75	13.158	168	29.475													
2.250	28	4.912	63	11.053		8.98	10.43	11.87	14.70	18.06	18.91	21.69	24.47	25.86	28.64	31.41	32.79
2.250	40	7.018	90	15.790						12.15	13.04	15.93	18.78	20.19	23.01	25.81	27.20
2.250	80	14.036	180	31.580													
2.273	33	5.790	75	13.158					12.11	15.54	16.40	19.21	22.01	23.41	26.20	28.98	30.36
2.286	35	6.141	80	14.036					11.00	14.48	15.34	18.17	20.99	22.39	25.18	27.97	29.36
2.290	31	5.439	71	12.457				10.14	13.03	16.43	17.28	20.09	22.88	24.28	27.06	29.83	31.22
2.308	39	6.842	90	15.790						12.26	13.15	16.05	18.90	20.32	23.13	25.93	27.33
2.310	29	5.088	67	11.755			9.61	11.07	13.93	17.31	18.16	20.96	23.74	25.14	27.91	30.69	32.07
2.333	48	8.421	112	19.650										15.51	18.43	21.30	22.73
2.333	60	10.527	140	24.562													
2.344	32	5.614	75	13.158					12.23	15.67	16.52	19.34	22.14	23.54	26.33	29.11	30.49
2.353	34	5.965	80	14.036					11.11	14.59	15.46	18.29	21.11	22.51	25.31	28.10	29.48
2.366	71	12.457	168	29.475													
2.367	30	5.263	71	12.457				10.25	13.15	16.56	17.40	20.21	23.01	24.40	27.18	29.96	31.35
2.368	38	6.667	90	15.790						12.38	13.27	16.16	19.02	20.44	23.25	26.06	27.45
2.393	28	4.912	67	11.755			9.73	11.19	14.05	17.44	18.28	21.08	23.87	25.26	28.04	30.81	32.20
2.400	75	13.158	180	31.580													
2.419	31	5.439	75	13.158					12.35	15.78	16.64	19.46	22.26	23.66	26.45	29.23	30.62
2.424	33	5.790	80	14.036					11.22	14.71	15.57	18.42	21.23	22.64	25.43	28.22	29.61
2.432	37	6.492	90	15.790						12.49	13.38	16.28	19.14	20.56	23.38	26.18	27.58
2.448	29	5.088	71	12.457				10.36	13.27	16.68	17.53	20.34	23.13	24.53	27.31	30.09	31.47
2.489	45	7.895	112	19.650									14.35	15.85	18.78	21.66	23.08
2.500	30	5.263	75	13.158					12.46	15.90	16.76	19.58	22.39	23.79	26.58	29.36	30.75
2.500	32	5.614	80	14.036					11.34	14.83	15.69	18.54	21.36	22.76	25.56	28.35	29.74
2.500	36	6.316	90	15.790						12.60	13.49	16.40	19.26	20.68	23.50	26.31	27.70
2.500	56	9.825	140	24.562													
2.500	80	14.036	200	35.089													
Length Factor*					**0.68**	**0.73**	**0.75**	**0.77**	**0.81**	**0.85**	**0.86**	**0.89**	**0.92**	**0.94**	**0.96**	**0.99**	**1.00**

* The length correction factor must be used to determine the proper belt width.

SELECTION

14M HT500 Selection Table (Continued)

Speed Ratio	Sprocket Combinations: Driver No. of Teeth	Driver Pitch Dia. Inches	Driven No. of Teeth	Driven Pitch Dia. Inches	Center Distance, Inches: 2380-14MX	2450-14MX	2520-14MX	2590-14MX	2660-14MX	2800-14MX	3136-14MX	3304-14MX	3360-14MX	3500-14MX	3850-14MX	3920-14MX	4326-14MX	4410-14MX
Length Factor*					1.01	1.02	1.03	1.04	1.05	1.07	1.12	1.14	1.14	1.16	1.19	1.20	1.24	1.25
1.875	32	5.614	60	10.527	34.08	35.47	36.85	38.23	39.61	42.37	48.99	52.31	53.41	56.16	63.06	64.44	72.44	74.09
1.875	40	7.018	75	13.158	30.85	32.24	33.62	35.00	36.38	39.15	45.78	49.10	50.20	52.96	59.86	61.24	69.24	70.90
1.875	48	8.421	90	15.790	27.59	28.98	30.37	31.76	33.14	35.92	42.56	45.88	46.98	49.74	56.65	58.03	66.04	67.69
1.893	28	4.912	53	9.299	35.62	37.00	38.38	39.76	41.14	43.90	50.52	53.83	54.93	57.69	64.59	65.97	73.96	75.62
1.909	33	5.790	63	11.053	33.52	34.90	36.28	37.66	39.04	41.81	48.43	51.74	52.85	55.60	62.50	63.88	71.88	73.53
1.914	35	6.141	67	11.755	32.67	34.06	35.44	36.82	38.20	40.97	47.59	50.91	52.01	54.77	61.67	63.05	71.04	72.70
1.919	37	6.492	71	12.457	31.83	33.21	34.59	35.98	37.36	40.13	46.75	50.07	51.17	53.93	60.83	62.21	70.21	71.87
1.923	39	6.842	75	13.158	30.98	32.37	33.75	35.14	36.52	39.29	45.91	49.23	50.33	53.09	59.99	61.38	69.38	71.03
1.931	29	5.088	56	9.825	35.06	36.44	37.82	39.20	40.58	43.34	49.96	53.27	54.38	57.13	64.03	65.41	73.40	75.06
1.935	31	5.439	60	10.527	34.22	35.60	36.98	38.36	39.74	42.50	49.12	52.44	53.54	56.30	63.19	64.58	72.57	74.23
1.969	32	5.614	63	11.053	33.65	35.03	36.41	37.80	39.18	41.94	48.56	51.88	52.98	55.74	62.64	64.02	72.01	73.67
1.971	34	5.965	67	11.755	32.80	34.19	35.57	36.95	38.33	41.10	47.72	51.04	52.14	54.90	61.80	63.18	71.18	72.84
1.972	36	6.316	71	12.457	31.96	33.34	34.72	36.11	37.49	40.26	46.89	50.20	51.30	54.06	60.96	62.35	70.34	72.00
1.972	71	12.457	140	24.562			19.59	21.03	22.46	25.32	32.08	35.45	36.56	39.35	46.31	47.71	55.75	57.42
1.974	38	6.667	75	13.158	31.11	32.50	33.88	35.27	36.65	39.42	46.05	49.36	50.47	53.23	60.13	61.51	69.51	71.17
2.000	28	4.912	56	9.825	35.19	36.57	37.95	39.33	40.71	43.48	50.10	53.41	54.51	57.27	64.16	65.54	73.54	75.20
2.000	30	5.263	60	10.527	34.35	35.73	37.11	38.49	39.87	42.64	49.26	52.57	53.67	56.43	63.33	64.71	72.71	74.36
2.000	40	7.018	80	14.036	30.11	31.50	32.88	34.27	35.65	38.42	45.06	48.38	49.48	52.24	59.15	60.53	68.53	70.19
2.000	45	7.895	90	15.790	27.97	29.36	30.75	32.14	33.53	36.30	42.95	46.27	47.37	50.14	57.05	58.43	66.44	68.09
2.000	56	9.825	112	19.650	23.18	24.59	25.99	27.39	28.79	31.59	38.26	41.60	42.71	45.48	52.40	53.79	61.81	63.47
2.027	37	6.492	75	13.158	31.24	32.63	34.01	35.39	36.78	39.55	46.18	49.49	50.60	53.36	60.26	61.64	69.64	71.30
2.029	35	6.141	71	12.457	32.09	33.47	34.86	36.24	37.62	40.39	47.02	50.33	51.44	54.20	61.10	62.48	70.48	72.13
2.030	33	5.790	67	11.755	32.94	34.32	35.70	37.09	38.46	41.23	47.86	51.17	52.28	55.03	61.93	63.31	71.31	72.97
2.032	31	5.439	63	11.053	33.78	35.17	36.54	37.93	39.31	42.07	48.70	52.01	53.11	55.87	62.77	64.15	72.15	73.80
2.051	39	6.842	80	14.036	30.24	31.63	33.01	34.40	35.78	38.55	45.19	48.51	49.61	52.37	59.28	60.66	68.66	70.32
2.069	29	5.088	60	10.527	34.48	35.86	37.24	38.63	40.00	42.77	49.39	52.71	53.81	56.57	63.46	64.84	72.84	74.50
2.083	36	6.316	75	13.158	31.37	32.76	34.14	35.53	36.91	39.68	46.31	49.63	50.73	53.49	60.39	61.78	69.78	71.43
2.088	34	5.965	71	12.457	32.22	33.60	34.99	36.37	37.75	40.52	47.15	50.47	51.57	54.33	61.23	62.61	70.61	72.27
2.090	67	11.755	140	24.562		18.59	20.05	21.50	22.94	25.80	32.58	35.94	37.06	39.86	46.82	48.22	56.27	57.93
2.093	43	7.544	90	15.790	28.22	29.62	31.00	32.40	33.78	36.56	43.21	46.53	47.63	50.40	57.31	58.69	66.70	68.36
2.094	32	5.614	67	11.755	33.07	34.45	35.83	37.22	38.60	41.36	47.99	51.31	52.41	55.17	62.07	63.45	71.45	73.10
2.100	30	5.263	63	11.053	33.91	35.30	36.68	38.06	39.44	42.21	48.83	52.15	53.25	56.01	62.90	64.29	72.28	73.94
2.100	80	14.036	168	29.475							26.42	29.86	31.00	33.84	40.88	42.28	50.39	52.06
2.105	38	6.667	80	14.036	30.37	31.76	33.14	34.53	35.91	38.68	45.32	48.64	49.74	52.51	59.41	60.79	68.80	70.45
2.113	53	9.299	112	19.650	23.54	24.95	26.36	27.76	29.16	31.96	38.65	41.98	43.09	45.87	52.79	54.18	62.20	63.86
2.143	28	4.912	60	10.527	34.61	35.99	37.37	38.76	40.14	42.90	49.52	52.84	53.94	56.70	63.60	64.98	72.98	74.63
2.143	35	6.141	75	13.158	31.50	32.89	34.27	35.65	37.04	39.81	46.44	49.76	50.86	53.62	60.53	61.91	69.91	71.57
2.152	33	5.790	71	12.457	32.35	33.73	35.12	36.50	37.88	40.65	47.28	50.60	51.70	54.46	61.36	62.75	70.75	72.40
2.161	31	5.439	67	11.755	33.20	34.58	35.96	37.35	38.73	41.50	48.12	51.44	52.54	55.30	62.20	63.58	71.58	73.24
2.162	37	6.492	80	14.036	30.49	31.88	33.27	34.66	36.04	38.81	45.45	48.77	49.87	52.64	59.54	60.93	68.93	70.59
2.172	29	5.088	63	11.053	34.04	35.43	36.81	38.19	39.57	42.34	48.96	52.28	53.38	56.14	63.04	64.42	72.42	74.07
2.206	34	5.965	75	13.158	31.63	33.01	34.40	35.78	37.17	39.94	46.57	49.89	50.99	53.76	60.66	62.04	70.04	71.70
2.219	32	5.614	71	12.457	32.48	33.86	35.25	36.63	38.01	40.78	47.41	50.73	51.83	54.59	61.50	62.88	70.88	72.54
2.222	36	6.316	80	14.036	30.62	32.01	33.40	34.79	36.17	38.94	45.58	48.90	50.01	52.77	59.68	61.06	69.06	70.72
2.222	63	11.053	140	24.562		19.05	20.51	21.97	23.41	26.27	33.07	36.44	37.56	40.36	47.33	48.72	56.78	58.45
2.233	30	5.263	67	11.755	33.33	34.71	36.09	37.48	38.86	41.63	48.25	51.57	52.67	55.43	62.33	63.72	71.72	73.37
2.240	50	8.772	112	19.650	23.91	25.32	26.73	28.14	29.54	32.34	39.03	42.37	43.48	46.25	53.18	54.57	62.60	64.26
2.240	75	13.158	168	29.475							27.00	30.46	31.60	34.44	41.50	42.90	51.02	52.69
2.250	28	4.912	63	11.053	34.17	35.56	36.94	38.32	39.70	42.47	49.10	52.41	53.51	56.27	63.17	64.55	72.55	74.21
2.250	40	7.018	90	15.790	28.60	30.00	31.38	32.78	34.16	36.95	43.60	46.92	48.03	50.79	57.70	59.09	67.10	68.76
2.250	80	14.036	180	31.580							24.30	27.82	28.98	31.85	38.97	40.38	48.53	50.22
2.273	33	5.790	75	13.158	31.75	33.14	34.53	35.91	37.30	40.07	46.70	50.02	51.13	53.89	60.79	62.17	70.18	71.83
2.286	35	6.141	80	14.036	30.75	32.14	33.53	34.91	36.30	39.07	45.71	49.03	50.14	52.90	59.81	61.19	69.20	70.85
2.290	31	5.439	71	12.457	32.61	33.99	35.38	36.76	38.14	40.91	47.54	50.86	51.97	54.73	61.63	63.01	71.01	72.67
2.308	39	6.842	90	15.790	28.73	30.12	31.51	32.91	34.29	37.07	43.73	47.05	48.16	50.92	57.84	59.22	67.23	68.89
2.310	29	5.088	67	11.755	33.46	34.84	36.22	37.61	38.99	41.76	48.39	51.70	52.81	55.57	62.47	63.85	71.85	73.51
2.333	48	8.421	112	19.650	24.15	25.56	26.97	28.38	29.78	32.59	39.28	42.62	43.73	46.51	53.44	54.83	62.86	64.52
2.333	60	10.527	140	24.562		19.39	20.85	22.31	23.76	26.63	33.43	36.81	37.93	40.73	47.71	49.10	57.16	58.83
2.344	32	5.614	75	13.158	31.88	33.27	34.66	36.04	37.43	40.20	46.83	50.15	51.26	54.02	60.92	62.31	70.31	71.97
2.353	34	5.965	80	14.036	30.88	32.27	33.65	35.04	36.43	39.20	45.84	49.17	50.27	53.03	59.94	61.32	69.33	70.99
2.366	71	12.457	168	29.475							27.47	30.93	32.07	34.92	41.99	43.39	51.52	53.19
2.367	30	5.263	71	12.457	32.73	34.12	35.51	36.89	38.27	41.05	47.68	51.00	52.10	54.86	61.76	63.15	71.15	72.80
2.368	38	6.667	90	15.790	28.85	30.25	31.64	33.03	34.42	37.20	43.85	47.18	48.29	51.05	57.97	59.35	67.36	69.02
2.393	28	4.912	67	11.755	33.59	34.97	36.35	37.74	39.12	41.89	48.52	51.84	52.94	55.70	62.60	63.98	71.98	73.64
2.400	75	13.158	180	31.580							24.87	28.40	29.56	32.44	39.57	40.99	49.15	50.84
2.419	31	5.439	75	13.158	32.01	33.40	34.78	36.17	37.56	40.33	46.97	50.29	51.39	54.15	61.06	62.44	70.44	72.10
2.424	33	5.790	80	14.036	31.00	32.40	33.78	35.17	36.56	39.33	45.97	49.30	50.40	53.16	60.07	61.46	69.46	71.12
2.432	37	6.492	90	15.790	28.98	30.37	31.76	33.16	34.55	37.33	43.98	47.31	48.42	51.18	58.10	59.48	67.49	69.15
2.448	29	5.088	71	12.457	32.86	34.25	35.63	37.02	38.40	41.18	47.81	51.13	52.23	54.99	61.90	63.28	71.28	72.94
2.489	45	7.895	112	19.650	24.51	25.93	27.34	28.75	30.15	32.96	39.66	43.00	44.11	46.89	53.83	55.22	63.25	64.91
2.500	30	5.263	75	13.158	32.14	33.53	34.91	36.30	37.69	40.46	47.10	50.42	51.52	54.28	61.19	62.57	70.58	72.23
2.500	32	5.614	80	14.036	31.13	32.52	33.91	35.30	36.68	39.46	46.10	49.43	50.53	53.30	60.20	61.59	69.59	71.25
2.500	36	6.316	90	15.790	29.10	30.50	31.89	33.29	34.67	37.46	44.11	47.44	48.55	51.31	58.23	59.61	67.63	69.29
2.500	56	9.825	140	24.562	18.34	19.84	21.31	22.77	24.22	27.10	33.92	37.30	38.42	41.23	48.21	49.61	57.68	59.34
2.500	80	14.036	200	35.089									25.34	28.33	35.64	37.08	45.34	47.04
Length Factor*					1.01	1.02	1.03	1.04	1.05	1.07	1.12	1.14	1.14	1.16	1.19	1.20	1.24	1.25

Center distance is greater than eight times the small sprocket and the large sprocket is not flanged. See Engineering Section for details.

* The length correction factor must be used to determine the proper belt width.

14M HT500 Selection Table

Speed Ratio	Sprocket Combinations				Center Distance, Inches												
	Driver		Driven		994-14MX	1120-14MX	1190-14MX	1260-14MX	1400-14MX	1568-14MX	1610-14MX	1750-14MX	1890-14MX	1960-14MX	2100-14MX	2240-14MX	2310-14MX
	No. of Teeth	Pitch Dia. Inches	No. of Teeth	Pitch Dia. Inches													
Length Factor*					**0.68**	**0.73**	**0.75**	**0.77**	**0.81**	**0.85**	**0.86**	**0.89**	**0.92**	**0.94**	**0.96**	**0.99**	**1.00**
2.507	67	11.755	168	29.475													
2.535	71	12.457	180	31.580													
2.536	28	4.912	71	12.457				10.48	13.38	16.80	17.65	20.46	23.26	24.65	27.44	30.22	31.60
2.571	35	6.141	90	15.790						12.71	13.61	16.52	19.38	20.80	23.62	26.43	27.83
2.581	31	5.439	80	14.036					11.45	14.95	15.81	18.66	21.48	22.88	25.68	28.47	29.86
2.586	29	5.088	75	13.158					12.58	16.02	16.88	19.71	22.51	23.91	26.70	29.49	30.88
2.605	43	7.544	112	19.650									14.57	16.07	19.01	21.89	23.32
2.642	53	9.299	140	24.562													
2.647	34	5.965	90	15.790						12.83	13.72	16.63	19.50	20.92	23.74	26.55	27.95
2.667	30	5.263	80	14.036					11.56	15.06	15.93	18.78	21.60	23.01	25.81	28.60	29.99
2.667	63	11.053	168	29.475													
2.667	75	13.158	200	35.089													
2.679	28	4.912	75	13.158					12.69	16.14	17.00	19.83	22.64	24.04	26.83	29.62	31.00
2.687	67	11.755	180	31.580													
2.727	33	5.790	90	15.790						12.94	13.83	16.75	19.62	21.04	23.87	26.68	28.07
2.759	29	5.088	80	14.036					11.67	15.18	16.05	18.90	21.72	23.13	25.93	28.73	30.12
2.800	40	7.018	112	19.650									14.90	16.41	19.36	22.25	23.68
2.800	50	8.772	140	24.562													17.47
2.800	60	10.527	168	29.475													
2.800	80	14.036	224	39.300													
2.813	32	5.614	90	15.790						13.05	13.95	16.87	19.73	21.16	23.99	26.80	28.20
2.817	71	12.457	200	35.089													
2.857	28	4.912	80	14.036					11.78	15.30	16.17	19.02	21.85	23.25	26.06	28.85	30.24
2.857	63	11.053	180	31.580													
2.872	39	6.842	112	19.650									15.01	16.52	19.47	22.36	23.80
2.903	31	5.439	90	15.790						13.16	14.06	16.98	19.85	21.28	24.11	26.92	28.32
2.917	48	8.421	140	24.562													17.69
2.947	38	6.667	112	19.650									15.12	16.63	19.58	22.48	23.91
2.985	67	11.755	200	35.089													
2.987	75	13.158	224	39.300													
3.000	30	5.263	90	15.790						13.27	14.17	17.10	19.97	21.40	24.23	27.05	28.45
3.000	56	9.825	168	29.475													
3.000	60	10.527	180	31.580													
3.027	37	6.492	112	19.650									15.23	16.74	19.70	22.60	24.03
3.103	29	5.088	90	15.790						13.38	14.28	17.21	20.09	21.52	24.35	27.17	28.57
3.111	36	6.316	112	19.650									15.34	16.85	19.81	22.72	24.15
3.111	45	7.895	140	24.562													18.01
3.155	71	12.457	224	39.300													
3.170	53	9.299	168	29.475													
3.175	63	11.053	200	35.089													
3.200	35	6.141	112	19.650									15.45	16.97	19.93	22.83	24.27
3.214	28	4.912	90	15.790						13.49	14.40	17.33	20.21	21.64	24.47	27.29	28.69
3.214	56	9.825	180	31.580													
3.256	43	7.544	140	24.562												16.65	18.23
3.294	34	5.965	112	19.650									15.56	17.08	20.04	22.95	24.39
3.333	60	10.527	200	35.089													
3.343	67	11.755	224	39.300													
3.360	50	8.772	168	29.475													
3.394	33	5.790	112	19.650									15.66	17.19	20.16	23.07	24.50
3.396	53	9.299	180	31.580													
3.500	32	5.614	112	19.650									15.77	17.30	20.27	23.18	24.62
3.500	40	7.018	140	24.562												16.97	18.55
3.500	48	8.421	168	29.475													
3.556	63	11.053	224	39.300													
3.571	56	9.825	200	35.089													
3.590	39	6.842	140	24.562												17.08	18.66
3.600	50	8.772	180	31.580													
3.613	31	5.439	112	19.650									15.88	17.41	20.38	23.30	24.74
3.684	38	6.667	140	24.562												17.18	18.77
3.733	30	5.263	112	19.650									15.99	17.52	20.50	23.41	24.85
3.733	45	7.895	168	29.475													
3.733	60	10.527	224	39.300													
3.750	48	8.421	180	31.580													
3.774	53	9.299	200	35.089													
3.784	37	6.492	140	24.562												17.29	18.87
3.862	29	5.088	112	19.650								12.91	16.10	17.63	20.61	23.53	24.97
3.889	36	6.316	140	24.562												17.39	18.98
3.907	43	7.544	168	29.475													
4.000	28	4.912	112	19.650								13.01	16.21	17.74	20.72	23.65	25.09
4.000	35	6.141	140	24.562												17.50	19.09
4.000	45	7.895	180	31.580													
4.000	50	8.772	200	35.089													
4.000	56	9.825	224	39.300													
Length Factor*					**0.68**	**0.73**	**0.75**	**0.77**	**0.81**	**0.85**	**0.86**	**0.89**	**0.92**	**0.94**	**0.96**	**0.99**	**1.00**

* The length correction factor must be used to determine the proper belt width.

SELECTION

14M HT500 Selection Table (Continued)

Speed Ratio	Sprocket Combinations: Driver No. of Teeth	Driver Pitch Dia. Inches	Driven No. of Teeth	Driven Pitch Dia. Inches	Center Distance, Inches: 2380-14MX	2450-14MX	2520-14MX	2590-14MX	2660-14MX	2800-14MX	3136-14MX	3304-14MX	3360-14MX	3500-14MX	3850-14MX	3920-14MX	4326-14MX	4410-14MX
Length Factor*					1.01	1.02	1.03	1.04	1.05	1.07	1.12	1.14	1.14	1.16	1.19	1.20	1.24	1.25
2.507	67	11.755	168	29.475							27.93	31.40	32.54	35.40	42.48	43.89	52.02	53.70
2.535	71	12.457	180	31.580							25.32	28.85	30.02	32.91	40.05	41.47	49.64	51.33
2.536	28	4.912	71	12.457	32.99	34.38	35.76	37.15	38.53	41.31	47.94	51.26	52.36	55.12	62.03	63.41	71.41	73.07
2.571	35	6.141	90	15.790	29.23	30.62	32.02	33.41	34.80	37.59	44.24	47.57	48.68	51.44	58.36	59.75	67.76	69.42
2.581	31	5.439	80	14.036	31.26	32.65	34.04	35.43	36.81	39.59	46.23	49.56	50.66	53.43	60.34	61.72	69.73	71.38
2.586	29	5.088	75	13.158	32.27	33.66	35.04	36.43	37.81	40.59	47.23	50.55	51.65	54.41	61.32	62.70	70.71	72.37
2.605	43	7.544	112	19.650	24.75	26.17	27.58	28.99	30.40	33.21	39.91	43.26	44.37	47.15	54.09	55.48	63.51	65.17
2.642	53	9.299	140	24.562	18.67	20.17	21.65	23.12	24.57	27.46	34.28	37.67	38.79	41.60	48.59	49.99	58.06	59.73
2.647	34	5.965	90	15.790	29.35	30.75	32.14	33.54	34.93	37.71	44.37	47.70	48.81	51.57	58.49	59.88	67.89	69.55
2.667	30	5.263	80	14.036	31.39	32.78	34.17	35.56	36.94	39.72	46.36	49.69	50.79	53.56	60.47	61.85	69.86	71.52
2.667	63	11.053	168	29.475						21.26	28.39	31.87	33.02	35.88	42.96	44.37	52.51	54.19
2.667	75	13.158	200	35.089								24.67	25.89	28.90	36.22	37.66	45.95	47.65
2.679	28	4.912	75	13.158	32.40	33.79	35.17	36.56	37.94	40.72	47.36	50.68	51.78	54.55	61.45	62.84	70.84	72.50
2.687	67	11.755	180	31.580							25.76	29.31	30.48	33.38	40.53	41.95	50.14	51.82
2.727	33	5.790	90	15.790	29.48	30.88	32.27	33.66	35.05	37.84	44.50	47.83	48.94	51.70	58.62	60.01	68.02	69.68
2.759	29	5.088	80	14.036	31.51	32.91	34.29	35.68	37.07	39.85	46.49	49.82	50.92	53.69	60.60	61.98	69.99	71.65
2.800	40	7.018	112	19.650	25.11	26.53	27.94	29.36	30.76	33.58	40.29	43.64	44.75	47.53	54.47	55.86	63.90	65.56
2.800	50	8.772	140	24.562	19.00	20.51	21.99	23.46	24.92	27.81	34.65	38.04	39.16	41.97	48.97	50.36	58.44	60.11
2.800	60	10.527	168	29.475						21.59	28.74	32.22	33.37	36.23	43.33	44.74	52.89	54.57
2.800	80	14.036	224	39.300											31.31	32.81	41.32	43.05
2.813	32	5.614	90	15.790	29.60	31.00	32.39	33.79	35.18	37.97	44.63	47.96	49.07	51.83	58.75	60.14	68.15	69.81
2.817	71	12.457	200	35.089								25.10	26.33	29.34	36.68	38.13	46.43	48.13
2.857	28	4.912	80	14.036	31.64	33.03	34.42	35.81	37.20	39.98	46.62	49.95	51.05	53.82	60.73	62.12	70.12	71.78
2.857	63	11.053	180	31.580							26.21	29.77	30.94	33.84	41.01	42.43	50.63	52.32
2.872	39	6.842	112	19.650	25.23	26.65	28.06	29.48	30.89	33.70	40.41	43.76	44.88	47.66	54.60	55.99	64.03	65.69
2.903	31	5.439	90	15.790	29.73	31.13	32.52	33.92	35.31	38.09	44.76	48.09	49.19	51.96	58.88	60.27	68.29	69.95
2.917	48	8.421	140	24.562	19.22	20.73	22.22	23.69	25.15	28.05	34.89	38.28	39.41	42.22	49.22	50.62	58.69	60.36
2.947	38	6.667	112	19.650	25.34	26.77	28.18	29.60	31.01	33.83	40.54	43.89	45.00	47.78	54.73	56.12	64.16	65.82
2.985	67	11.755	200	35.089								25.53	26.76	29.79	37.15	38.60	46.91	48.61
2.987	75	13.158	224	39.300											31.86	33.37	41.90	43.64
3.000	30	5.263	90	15.790	29.85	31.25	32.64	34.04	35.43	38.22	44.89	48.22	49.32	52.09	59.02	60.40	68.42	70.08
3.000	56	9.825	168	29.475						22.02	29.19	32.69	33.84	36.71	43.81	45.23	53.38	55.06
3.000	60	10.527	180	31.580							26.54	30.11	31.28	34.19	41.37	42.79	50.99	52.68
3.027	37	6.492	112	19.650	25.46	26.89	28.31	29.72	31.13	33.95	40.66	44.02	45.13	47.91	54.86	56.25	64.29	65.95
3.103	29	5.088	90	15.790	29.97	31.38	32.77	34.17	35.56	38.35	45.01	48.35	49.45	52.22	59.15	60.53	68.55	70.21
3.111	36	6.316	112	19.650	25.58	27.01	28.43	29.84	31.25	34.07	40.79	44.14	45.25	48.04	54.99	56.38	64.42	66.08
3.111	45	7.895	140	24.562	19.55	21.07	22.56	24.03	25.49	28.40	35.25	38.65	39.77	42.59	49.59	50.99	59.07	60.75
3.155	71	12.457	224	39.300											32.30	33.81	42.36	44.10
3.170	53	9.299	168	29.475						22.35	29.54	33.03	34.19	37.06	44.18	45.59	53.75	55.44
3.175	63	11.053	200	35.089								25.97	27.20	30.23	37.61	39.06	47.38	49.09
3.200	35	6.141	112	19.650	25.70	27.13	28.55	29.96	31.37	34.19	40.91	44.27	45.38	48.16	55.11	56.50	64.55	66.21
3.214	28	4.912	90	15.790	30.10	31.50	32.90	34.29	35.69	38.48	45.14	48.48	49.58	52.35	59.28	60.66	68.68	70.34
3.214	56	9.825	180	31.580							26.99	30.56	31.74	34.65	41.84	43.27	51.48	53.17
3.256	43	7.544	140	24.562	19.77	21.29	22.78	24.26	25.72	28.63	35.49	38.89	40.02	42.83	49.84	51.24	59.33	61.00
3.294	34	5.965	112	19.650	25.82	27.25	28.67	30.09	31.50	34.32	41.04	44.39	45.51	48.29	55.24	56.63	64.67	66.34
3.333	60	10.527	200	35.089								26.29	27.53	30.57	37.95	39.41	47.74	49.45
3.343	67	11.755	224	39.300											32.74	34.26	42.82	44.57
3.360	50	8.772	168	29.475						22.67	29.88	33.38	34.54	37.41	44.54	45.96	54.12	55.81
3.394	33	5.790	112	19.650	25.94	27.37	28.79	30.21	31.62	34.44	41.16	44.52	45.63	48.42	55.37	56.76	64.80	66.47
3.396	53	9.299	180	31.580							27.32	30.90	32.08	35.00	42.20	43.63	51.85	53.54
3.500	32	5.614	112	19.650	26.06	27.49	28.91	30.33	31.74	34.56	41.29	44.64	45.76	48.54	55.50	56.89	64.93	66.60
3.500	40	7.018	140	24.562	20.10	21.62	23.12	24.60	26.07	28.98	35.85	39.25	40.38	43.20	50.21	51.61	59.71	61.38
3.500	48	8.421	168	29.475					19.71	22.89	30.11	33.61	34.77	37.65	44.78	46.20	54.37	56.06
3.556	63	11.053	224	39.300											33.18	34.70	43.28	45.03
3.571	56	9.825	200	35.089							22.87	26.72	27.96	31.01	38.41	39.87	48.22	49.93
3.590	39	6.842	140	24.562	20.21	21.73	23.23	24.71	26.18	29.10	35.97	39.37	40.50	43.32	50.34	51.74	59.83	61.51
3.600	50	8.772	180	31.580							27.65	31.24	32.42	35.35	42.56	43.99	52.21	53.91
3.613	31	5.439	112	19.650	26.17	27.61	29.03	30.45	31.86	34.68	41.41	44.77	45.88	48.67	55.63	57.02	65.06	66.73
3.684	38	6.667	140	24.562	20.32	21.84	23.34	24.83	26.30	29.21	36.09	39.49	40.62	43.44	50.46	51.86	59.96	61.63
3.733	30	5.263	112	19.650	26.29	27.72	29.15	30.57	31.98	34.81	41.54	44.90	46.01	48.80	55.75	57.15	65.19	66.86
3.733	45	7.895	168	29.475					20.03	23.21	30.45	33.96	35.12	38.00	45.14	46.56	54.74	56.42
3.733	60	10.527	224	39.300										25.60	33.51	35.03	43.63	45.38
3.750	48	8.421	180	31.580							27.87	31.47	32.65	35.58	42.79	44.22	52.45	54.15
3.774	53	9.299	200	35.089							23.18	27.04	28.28	31.34	38.76	40.22	48.57	50.29
3.784	37	6.492	140	24.562	20.43	21.95	23.45	24.94	26.41	29.33	36.21	39.62	40.74	43.56	50.59	51.99	60.08	61.76
3.862	29	5.088	112	19.650	26.41	27.84	29.27	30.69	32.10	34.93	41.66	45.02	46.14	48.92	55.88	57.27	65.32	66.98
3.889	36	6.316	140	24.562	20.54	22.06	23.56	25.05	26.52	29.44	36.33	39.74	40.87	43.69	50.71	52.11	60.21	61.88
3.907	43	7.544	168	29.475					20.23	23.43	30.67	34.19	35.35	38.24	45.38	46.80	54.98	56.67
4.000	28	4.912	112	19.650	26.53	27.96	29.39	30.81	32.22	35.05	41.79	45.15	46.26	49.05	56.01	57.40	65.45	67.11
4.000	35	6.141	140	24.562	20.65	22.17	23.68	25.17	26.64	29.56	36.45	39.86	40.99	43.81	50.83	52.24	60.34	62.01
4.000	45	7.895	180	31.580						20.61	28.20	31.81	32.99	35.92	43.15	44.58	52.82	54.51
4.000	50	8.772	200	35.089							23.49	27.36	28.61	31.67	39.10	40.56	48.93	50.64
4.000	56	9.825	224	39.300										26.01	33.95	35.47	44.09	45.84
Length Factor*					1.01	1.02	1.03	1.04	1.05	1.07	1.12	1.14	1.14	1.16	1.19	1.20	1.24	1.25

Center distance is greater than eight times the small sprocket and the large sprocket is not flanged. See Engineering Section for details.

* The length correction factor must be used to determine the proper belt width.

14M HT500 Selection Table

Speed Ratio	Sprocket Combinations				Center Distance, Inches												
	Driver		Driven		994-14MX	1120-14MX	1190-14MX	1260-14MX	1400-14MX	1568-14MX	1610-14MX	1750-14MX	1890-14MX	1960-14MX	2100-14MX	2240-14MX	2310-14MX
	No. of Teeth	Pitch Dia. Inches	No. of Teeth	Pitch Dia. Inches													
Length Factor*					**0.68**	**0.73**	**0.75**	**0.77**	**0.81**	**0.85**	**0.86**	**0.89**	**0.92**	**0.94**	**0.96**	**0.99**	**1.00**
4.118	34	5.965	140	24.562												17.60	19.19
4.167	48	8.421	200	35.089													
4.186	43	7.544	180	31.580													
4.200	40	7.018	168	29.475													
4.226	53	9.299	224	39.300													
4.242	33	5.790	140	24.562												17.70	19.30
4.308	39	6.842	168	29.475													
4.375	32	5.614	140	24.562												17.81	19.41
4.421	38	6.667	168	29.475													
4.444	45	7.895	200	35.089													
4.480	50	8.772	224	39.300													
4.500	40	7.018	180	31.580													
4.516	31	5.439	140	24.562												17.91	19.51
4.541	37	6.492	168	29.475													
4.615	39	6.842	180	31.580													
4.651	43	7.544	200	35.089													
4.667	30	5.263	140	24.562												18.02	19.62
4.667	36	6.316	168	29.475													
4.667	48	8.421	224	39.300													
4.737	38	6.667	180	31.580													
4.800	35	6.141	168	29.475													
4.828	29	5.088	140	24.562												18.12	19.73
4.865	37	6.492	180	31.580													
4.941	34	5.965	168	29.475													
4.978	45	7.895	224	39.300													
5.000	28	4.912	140	24.562												18.23	19.83
5.000	36	6.316	180	31.580													
5.000	40	7.018	200	35.089													
5.091	33	5.790	168	29.475													
5.128	39	6.842	200	35.089													
5.143	35	6.141	180	31.580													
5.209	43	7.544	224	39.300													
5.250	32	5.614	168	29.475													
5.263	38	6.667	200	35.089													
5.294	34	5.965	180	31.580													
5.405	37	6.492	200	35.089													
5.419	31	5.439	168	29.475													
5.455	33	5.790	180	31.580													
5.556	36	6.316	200	35.089													
5.600	30	5.263	168	29.475													
5.600	40	7.018	224	39.300													
5.625	32	5.614	180	31.580													
5.714	35	6.141	200	35.089													
5.744	39	6.842	224	39.300													
5.793	29	5.088	168	29.475													
5.806	31	5.439	180	31.580													
5.882	34	5.965	200	35.089													
5.895	38	6.667	224	39.300													
6.000	28	4.912	168	29.475													
6.000	30	5.263	180	31.580													
6.054	37	6.492	224	39.300													
6.061	33	5.790	200	35.089													
6.207	29	5.088	180	31.580													
6.222	36	6.316	224	39.300													
6.250	32	5.614	200	35.089													
6.400	35	6.141	224	39.300													
6.429	28	4.912	180	31.580													
6.452	31	5.439	200	35.089													
6.588	34	5.965	224	39.300													
6.667	30	5.263	200	35.089													
6.788	33	5.790	224	39.300													
6.897	29	5.088	200	35.089													
7.000	32	5.614	224	39.300													
7.143	28	4.912	200	35.089													
7.226	31	5.439	224	39.300													
7.467	30	5.263	224	39.300													
7.724	29	5.088	224	39.300													
8.000	28	4.912	224	39.300													
Length Factor*					**0.68**	**0.73**	**0.75**	**0.77**	**0.81**	**0.85**	**0.86**	**0.89**	**0.92**	**0.94**	**0.96**	**0.99**	**1.00**

* The length correction factor must be used to determine the proper belt width.

SELECTION

14M HT500 Selection Table (Continued)

Speed Ratio	Sprocket Combinations: Driver No. of Teeth	Driver Pitch Dia. Inches	Driven No. of Teeth	Driven Pitch Dia. Inches	Center Distance, Inches: 2380-14MX	2450-14MX	2520-14MX	2590-14MX	2660-14MX	2800-14MX	3136-14MX	3304-14MX	3360-14MX	3500-14MX	3850-14MX	3920-14MX	4326-14MX	4410-14MX
Length Factor*					1.01	1.02	1.03	1.04	1.05	1.07	1.12	1.14	1.14	1.16	1.19	1.20	1.24	1.25
4.118	34	5.965	140	24.562	20.75	22.28	23.79	25.28	26.75	29.68	36.57	39.98	41.11	43.93	50.96	52.36	60.46	62.14
4.167	48	8.421	200	35.089							23.70	27.58	28.82	31.89	39.33	40.79	49.16	50.88
4.186	43	7.544	180	31.580						20.81	28.42	32.03	33.21	36.15	43.38	44.82	53.06	54.76
4.200	40	7.018	168	29.475				18.87	20.55	23.75	31.01	34.54	35.70	38.59	45.74	47.16	55.35	57.04
4.226	53	9.299	224	39.300										26.32	34.28	35.80	44.43	46.18
4.242	33	5.790	140	24.562	20.86	22.39	23.90	25.39	26.86	29.79	36.68	40.10	41.23	44.05	51.08	52.49	60.59	62.26
4.308	39	6.842	168	29.475				18.97	20.65	23.86	31.13	34.65	35.81	38.71	45.86	47.28	55.47	57.16
4.375	32	5.614	140	24.562	20.97	22.50	24.01	25.50	26.98	29.91	36.80	40.22	41.35	44.17	51.21	52.61	60.71	62.39
4.421	38	6.667	168	29.475				19.08	20.75	23.97	31.24	34.77	35.93	38.82	45.98	47.40	55.60	57.29
4.444	45	7.895	200	35.089							24.01	27.90	29.15	32.22	39.67	41.14	49.52	51.24
4.480	50	8.772	224	39.300										26.63	34.60	36.13	44.77	46.53
4.500	40	7.018	180	31.580						21.12	28.75	32.37	33.55	36.49	43.73	45.17	53.42	55.12
4.516	31	5.439	140	24.562	21.08	22.61	24.12	25.62	27.09	30.02	36.92	40.34	41.47	44.30	51.33	52.73	60.84	62.51
4.541	37	6.492	168	29.475				19.18	20.86	24.07	31.35	34.88	36.04	38.94	46.10	47.52	55.72	57.41
4.615	39	6.842	180	31.580						21.23	28.86	32.48	33.66	36.61	43.85	45.29	53.54	55.24
4.651	43	7.544	200	35.089							24.21	28.11	29.36	32.44	39.90	41.37	49.75	51.47
4.667	30	5.263	140	24.562	21.19	22.72	24.23	25.73	27.21	30.14	37.04	40.46	41.59	44.42	51.45	52.86	60.97	62.64
4.667	36	6.316	168	29.475				19.28	20.96	24.18	31.46	35.00	36.16	39.06	46.22	47.64	55.84	57.53
4.667	48	8.421	224	39.300										26.84	34.82	36.35	45.00	46.76
4.737	38	6.667	180	31.580						21.33	28.97	32.59	33.78	36.72	43.97	45.41	53.66	55.36
4.800	35	6.141	168	29.475				19.38	21.06	24.29	31.58	35.11	36.27	39.17	46.34	47.76	55.96	57.65
4.828	29	5.088	140	24.562	21.30	22.83	24.34	25.84	27.32	30.25	37.16	40.58	41.71	44.54	51.58	52.98	61.09	62.77
4.865	37	6.492	180	31.580						21.43	29.08	32.70	33.89	36.84	44.09	45.52	53.78	55.48
4.941	34	5.965	168	29.475				19.48	21.17	24.39	31.69	35.23	36.39	39.29	46.46	47.88	56.08	57.78
4.978	45	7.895	224	39.300										27.14	35.15	36.68	45.34	47.10
5.000	28	4.912	140	24.562	21.40	22.94	24.45	25.95	27.43	30.37	37.28	40.70	41.83	44.66	51.70	53.10	61.22	62.89
5.000	36	6.316	180	31.580						21.53	29.19	32.81	34.00	36.95	44.20	45.64	53.90	55.61
5.000	40	7.018	200	35.089							24.52	28.43	29.68	32.77	40.24	41.71	50.11	51.83
5.091	33	5.790	168	29.475				19.58	21.27	24.50	31.80	35.34	36.50	39.40	46.57	48.00	56.21	57.90
5.128	39	6.842	200	35.089							24.62	28.53	29.79	32.88	40.35	41.82	50.22	51.95
5.143	35	6.141	180	31.580						21.63	29.30	32.93	34.11	37.06	44.32	45.76	54.02	55.73
5.209	43	7.544	224	39.300										27.35	35.37	36.90	45.57	47.33
5.250	32	5.614	168	29.475				19.69	21.38	24.61	31.91	35.45	36.62	39.52	46.69	48.12	56.33	58.02
5.263	38	6.667	200	35.089							24.73	28.64	29.90	32.99	40.47	41.94	50.34	52.06
5.294	34	5.965	180	31.580						21.74	29.41	33.04	34.23	37.18	44.44	45.88	54.15	55.85
5.405	37	6.492	200	35.089							24.83	28.75	30.01	33.10	40.58	42.05	50.46	52.18
5.419	31	5.439	168	29.475			18.00	19.79	21.48	24.71	32.03	35.57	36.73	39.64	46.81	48.24	56.45	58.14
5.455	33	5.790	180	31.580						21.84	29.52	33.15	34.34	37.29	44.56	45.99	54.27	55.97
5.556	36	6.316	200	35.089							24.93	28.85	30.11	33.21	40.70	42.17	50.58	52.30
5.600	30	5.263	168	29.475			18.10	19.89	21.58	24.82	32.14	35.68	36.85	39.75	46.93	48.36	56.57	58.26
5.600	40	7.018	224	39.300									24.13	27.66	35.69	37.23	45.91	47.67
5.625	32	5.614	180	31.580						21.94	29.62	33.26	34.45	37.41	44.67	46.11	54.39	56.09
5.714	35	6.141	200	35.089							25.03	28.96	30.22	33.32	40.81	42.28	50.69	52.42
5.744	39	6.842	224	39.300									24.23	27.76	35.80	37.34	46.02	47.79
5.793	29	5.088	168	29.475			18.19	19.99	21.69	24.93	32.25	35.80	36.96	39.87	47.05	48.48	56.69	58.39
5.806	31	5.439	180	31.580						22.04	29.73	33.37	34.56	37.52	44.79	46.23	54.51	56.21
5.882	34	5.965	200	35.089							25.14	29.07	30.33	33.43	40.92	42.39	50.81	52.53
5.895	38	6.667	224	39.300									24.32	27.86	35.91	37.45	46.14	47.90
6.000	28	4.912	168	29.475			18.29	20.09	21.79	25.03	32.36	35.91	37.08	39.99	47.17	48.60	56.81	58.51
6.000	30	5.263	180	31.580						22.14	29.84	33.48	34.68	37.63	44.91	46.35	54.63	56.33
6.054	37	6.492	224	39.300									24.42	27.96	36.02	37.56	46.25	48.01
6.061	33	5.790	200	35.089							25.24	29.17	30.43	33.53	41.03	42.51	50.93	52.65
6.207	29	5.088	180	31.580						22.25	29.95	33.59	34.79	37.75	45.02	46.46	54.75	56.45
6.222	36	6.316	224	39.300									24.52	28.07	36.12	37.67	46.36	48.13
6.250	32	5.614	200	35.089							25.34	29.28	30.54	33.64	41.15	42.62	51.04	52.77
6.400	35	6.141	224	39.300									24.62	28.17	36.23	37.78	46.48	48.24
6.429	28	4.912	180	31.580					18.70	22.35	30.06	33.71	34.90	37.86	45.14	46.58	54.87	56.57
6.452	31	5.439	200	35.089							25.44	29.38	30.65	33.75	41.26	42.74	51.16	52.89
6.588	34	5.965	224	39.300								23.19	24.72	28.27	36.34	37.88	46.59	48.36
6.667	30	5.263	200	35.089							25.55	29.49	30.76	33.86	41.37	42.85	51.28	53.01
6.788	33	5.790	224	39.300								23.28	24.82	28.37	36.45	37.99	46.70	48.47
6.897	29	5.088	200	35.089							25.65	29.59	30.86	33.97	41.49	42.96	51.40	53.12
7.000	32	5.614	224	39.300								23.38	24.92	28.47	36.56	38.10	46.82	48.58
7.143	28	4.912	200	35.089							25.75	29.70	30.97	34.08	41.60	43.08	51.51	53.24
7.226	31	5.439	224	39.300								23.48	25.02	28.58	36.66	38.21	46.93	48.70
7.467	30	5.263	224	39.300								23.58	25.11	28.68	36.77	38.32	47.04	48.81
7.724	29	5.088	224	39.300								23.67	25.21	28.78	36.88	38.43	47.15	48.93
8.000	28	4.912	224	39.300								23.77	25.31	28.88	36.99	38.54	47.27	49.04
Length Factor*					1.01	1.02	1.03	1.04	1.05	1.07	1.12	1.14	1.14	1.16	1.19	1.20	1.24	1.25

Center distance is greater than eight times the small sprocket and the large sprocket is not flanged. See Engineering Section for details.

* The length correction factor must be used to determine the proper belt width.

Overhung Load Calculations

Overhung load is an important consideration for drive design. Motor and reducer bearings are rated for specific load capacities to achieve calculated life. If the drive design is such that bearing loads are exceeded, life will be proportionally reduced. Likewise, if the drive exerts a lesser load on the bearings, life will be extended. Needless to say, drive design that keeps bearing loads below ratings can pay big dividends.

BELT PULL: The basis for overhung load calculation is belt pull. Belt pull is the result of torque being transmitted when the belt exerts a pull on the sprocket diameter.

EXAMPLE: 5 hp at 200 RPM is 1,575 inch-pounds of torque. If a 6" diameter sprocket is used, (3 inch radius), 1,575/3 = 525 pounds effective belt pull is required. Note that if a larger diameter sprocket is used, belt pull is reduced accordingly.

Belt pull can be calculated using the following formula:

$$\text{Belt Pull (lbs)} = \frac{126{,}000 \times HP \times F}{RPM \times PD}$$

Where: HP = Name plate horsepower of the motor or driver

F = Drive Factor (1.3 for synchronous belt)

RPM = Shaft RPM

PD = Pitch Diameter of Sprocket

BEARING LOAD: Belt pull translates into bearing load and is greatly affected by the location of the sprocket on the shaft. Fig. 1 shows an example of what happens as the distance between the centerline of belt pull and the adjacent bearing is extended.

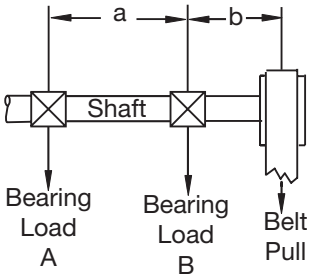

Overhung Sheave

$$\text{Load at B, lbs.} = \frac{\text{Belt Pull} \times (a + b)}{a}$$

Fig. 1

a	b	Belt Pull	Bearing Load "B"
10 in	1 in	500 lbs	550 lbs
10 in	5 in	500 lbs	750 lbs

Now consider the same situation for a motor or gearbox. Referring to Fig. 2, it should be obvious that the sprocket should be mounted as close as possible to the face of the gearbox.

As the distance between the gearbox face and sprocket increases, the bearing load is also increased, which leads to a reduction in bearing life.

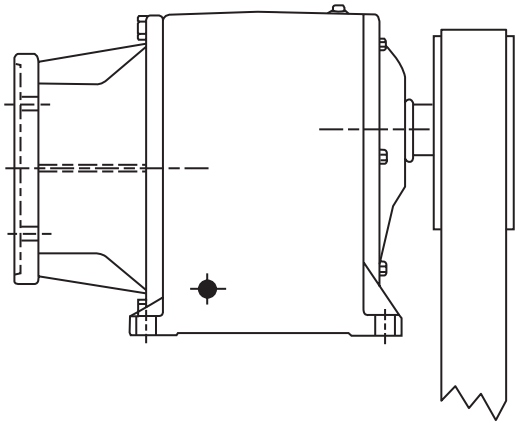

Fig. 2

Another warning from gearbox manufacturers is that the centerline of belt pull should not extend beyond the end of the shaft. Given a choice of a small diameter, wide face-width drive design, or a larger diameter, narrower face-width alternative, the latter would be preferable if bearing life is an important consideration.

DRIVE DESIGN CONSIDERATIONS

For any given application, there are usually several possible drive alternatives. In some cases, the selection with the smallest diameter sprockets might be the least expensive. As can be seen from the previous discussion, this alternative could be a bad choice. Smaller diameter sprockets lead to higher belt pull; their greater width is also more sensitive to misalignment.

HT500 Drive Installation

Sprocket Installation

1. Thoroughly inspect the bore of the sprocket and the tapered surface of the bushing. Any paint, dirt, oil or grease must be removed.
2. Assemble bushing into sprocket. Loosely insert the screws into assembly. At least one sprocket must have flanges.
3. With key in keyseat of shaft, slide sprocket to its desired position with screw heads to the outside. If it is hard to slide the bushing onto the shaft, check shaft for burrs, etc.
4. Line up assembly so as not to misalign belts and tighten screws evenly and progressively. Apply the recommended torque to screws.

Sprocket Alignment

HT500 sprocket alignment and parallelism of the shafts is very important. Proper alignment helps to equalize the load across the entire belt width, thereby reducing wear and extending belt life.

Place a straightedge against the outside edge of the sprockets and move sprockets until the straightedge touches the two outside and two inside edges of the sprockets. The straightedge should cross the sprockets as close to the shafts as possible. A string can be used if a straightedge is not available. Remember the string should contact at four points as explained above. Note that the precision laser alignment tool (pn **109993**) is an accurate and practical alternative to the straightedge method.

After aligning the sprockets, check the rigidity of the supporting framework. Shafts should be well supported to prevent distortion and a resulting change in the center distance under load. Do not use spring-loaded or weighted idlers. Idler sprockets or pulleys must be locked into position after adjusting belt tension.

Belt Installation and Tensioning

Do not pry or otherwise force the belt onto the sprockets, as this can result in permanent damage to the belt. Reduce the center distance between the pulleys so that the belt can be easily installed.

HT500 drives must be properly tensioned. If the belt is too loose, it may jump teeth when heavier loads are applied. If the belt is too tight, belt life will suffer, and bearings will be unnecessarily overloaded. Improper tension can result in excessive drive noise.

Force/Deflection Tensioning Procedure:

First, measure the span length and calculate the deflection distance of 1/64, per inch span (see illustration).

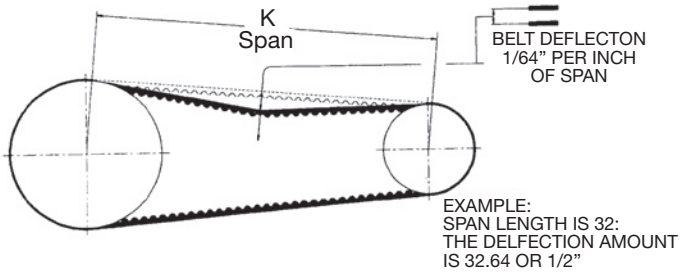

Apply the calculated deflection force at the center of the span. Measure the deflection with this force applied. Move the center distance until the proper deflection is obtained.

Sonic Tension Meter Method:

The Sonic Tension Meter (pn **109994**) measures frequency in the belt upon an applied stimulus. The meter will then provide an output of both frequency and calculated static tension. The static tension is calculated based upon three user inputs: belt width, span (as measured in the above illustration) and the belt's mass constant. Variables for belt mass constants are provided in the following table.

Belt		Adjusted Belt Weight (g/m)
HT200	5M	4.1
HT200	8M	5.5
HT200	14M	9.6
HT250	8M	5.8
HT250	14M	9.7
HTD	8M	6.2
HTD	14M	9.9
HTD	20M	12.8
HT500	14M	7.9
HT500	8M	4.7

To measure the belt's span vibration:

Input parameters of span length, belt width and the belt mass constant into the meter.

Press the MEASURE button on the meter.

Thumb the belt at center span as if strumming a guitar string.

Hold the microphone ¼" away from the back of the belt.

The tension meter will display static tension and frequency. Compare the frequency output to the formula below. Note that drive outputs of static tension and frequency are also provided on-line from the ViaSync selection program at www.ptwizard.com.

$$T = 4 * M * W * S^2 * f^2 * 10^{-9}$$

Where:
- T = Belt span tension (Newtons)
- M = Belt mass constant (g/m)
- W = Belt width (mm)
- S = Span length (mm)
- f = Natural frequency of the belt at applied tension (Hz)

ENGINEERING/TECHNICAL

Drive Alignment

Good tracking of synchronous belts on their sprockets depends upon alignment to within ¼°. This translates to a maximum "M" dimension of 0.05" per foot center distance.

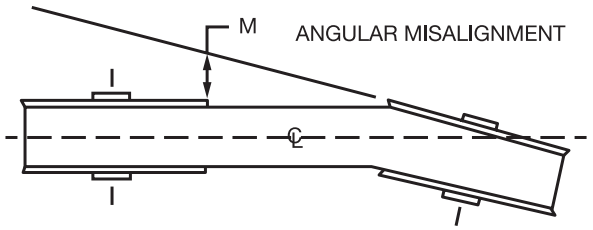

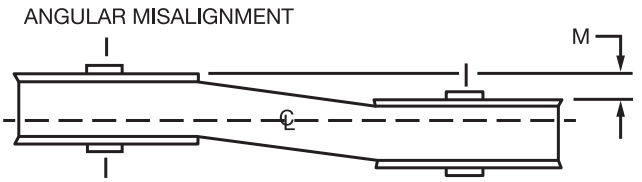

Drive Tensioning

Formula Method

The formula method for determining belt tension may be used for greater accuracy.

Step 1. Calculate Min. Installation Tension:

Formula 1:

$$T = \frac{20\,(HP)}{V} + mV^2$$

Where: HP = Horsepower
V = Belt Velocity/1000 (in FPM)
m = Value in Table 1.
Belt Velocity = PD x RPM x 0.262
(PD = Pitch Dia. in inches)

***Important!** If formula calculation for "T" is less than "Min T. Value" (Table 2) use the "Min T. Value" for T. Always use the greater T value; i.e. from T Formula 1 or Table 2.

Step 2. Calculate Deflection Forces:

Formula 2:

$$MinForce = \frac{1.0 * T + \left(\frac{K}{L}\right) Y}{16}$$

Formula 3:

$$MaxForce = \frac{1.1 * T + \left(\frac{K}{L}\right) Y}{16}$$

Note: For used belt, use 0.7*T to 0.8*T instead of the 1.0*T and 1.1*T for new belts.
T = Static tension, lbs
L = Belt length, inches
Y = Factor from Table 2.
K = Span length, inches
CD = Center distance, inches
D = Large pulley diameter, inches
D = Small pulley diameter, inches

$$k = \sqrt{CD^2 - \frac{(D-d)}{4}^2}$$

Drive Tensioning

Table 1

	Pitch	Width	m	Y	Min Ts
HT200	5 mm	15 mm	0.28	24.9	14
HT200	5 mm	25 mm	0.47	41.5	23
HT200	8 mm	20 mm	0.58	34.2	19
HT200	8 mm	30 mm	0.88	51.3	30
HT200	8 mm	50 mm	1.46	85.5	52
HT200	8 mm	85 mm	2.45	145.3	95
HT200	14 mm	40 mm	1.78	93.0	77
HT200	14 mm	55 mm	2.44	127.9	120
HT200	14 mm	85 mm	3.77	197.7	206
HT200	14 mm	115 mm	5.11	267.5	291
HT200	14 mm	170 mm	7.55	395.4	447
HTD	20 mm	115 mm	7.24	367.0	392
HTD	20 mm	170 mm	10.71	542.5	603
HTD	20 mm	230 mm	14.49	734.0	834
HTD	20 mm	290 mm	18.27	925.4	1065
HTD	20 mm	340 mm	21.42	1085.0	1258
HT250	8 mm	20	0.54	42.29	19
HT250	8 mm	30	0.81	63.44	30
HT250	8 mm	50	1.35	105.7	52
HT250	8 mm	85	2.29	179.7	95
HT250	14 mm	40	1.80	93.04	77
HT250	14 mm	55	2.48	127.9	120
HT250	14 mm	85	3.83	197.7	206
HT250	14 mm	115	2.18	267.5	291
HT250	14 mm	170	7.66	395.4	448
HT500	8 mm	12 mm	0.33	65	28
HT500	8 mm	21 mm	0.57	113	49
HT500	8 mm	36 mm	0.97	194	84
HT500	8 mm	62 mm	1.68	335	145
HT500	14 mm	20 mm	0.92	230	119
HT500	14 mm	37 mm	1.69	4.26	220
HT500	14 mm	68 mm	3.11	782	405
HT500	14 mm	90 mm	4.12	1035	536
HT500	14 mm	125 mm	5.72	1438	744

ENGINEERING/TECHNICAL

Software: Via - SYNC

For any given synchronous drive application, there may be several DODGE HT500, HT200, HTD or DODGE DYNA-SYNC® product combinations that could satisfy the requirements. Finding the best drive can be a time-consuming and frustrating task.

The DODGE VIA-SYNC program provides selections for all of these product offerings for both TAPER-LOCK® and QD* type sprockets. All relevant data for limited and unlimited drive selections is presented in a format that allows quick and accurate analysis and sorting, whether based upon lowest price, minimum bearing load, highest service factor, etc.

VIA-SYNC calculates speed up drives or drives for nonstandard motor speeds. The most appropriate selection can then be specified, which contains sprocket, bushing and belt sizes and part numbers.

VIA-SYNC has the capability of sharing data with DODGE T-A DISCovery™ or DODGE SCD DISCovery™ programs.

Dodge VIA-SYNC can be accessed from www.ptwizard.com. Additional troubleshooting and selection assistance is available at 864-284-5700.

Troubleshooting

Problem	Cause	Remedy
Unusual Noise	Misaligned drive	Re-adjust alignment
	Hi or Low belt tension	Adjust to recommended value
	Backside idler	Use inside idler
	Worn sprocket	Replace sprocket
	Bent sprocket flange	Replace or repair
	Excessive belt speed	Redesign drive
	Incorrect belt profile	Replace with DODGE belt
	Subminimal spkt. dia.	Redesign with lager spkts.
	Excessive load	Use higher capacity drive
	Weak mntg. structure	
Loss of Belt Tension	Weak mntg. structure	Reinforce mounting structure
	Excessive spkt. wear	Use wear-resistant sprockets
	Fixed center drive	Install inside idler
	Excessive debris	Install adequate drive guard.
	Excessive load	Use higher capacity drive
	Subminimal spkt. dia.	Redesign drive
	Drive running hot	Use heat fingers on hot shaft
	Belt degradation	Protect from excessive heat
Belt Edge Wear	Damaged flanges	Repair or replace sprocket
	Low belt tension	Adjust to recommended value
	Poor tracking	Correct alignment
	Guard interference	Remove obstruction, add idler
Pre-mature Tooth Wear	Improper tension	Correct drive tension
	Poor alignment	Correct drive alignment
	Wrong belt type	Use correct DODGE belt
	Worn sprocket	Replace
	Damaged sprocket	Replace
	Excessive load	Use higher capacity drive
	Dirt or debris	Install adequate drive guard
	Sprocket wobble	Correct bushing installation
Tooth Shear	Shock loads	Use higher capacity drive
	Few teeth in mesh	Redesign drive
	Worn sprocket	Replace
	Backside idler	Use inside idler
	Wrong belt profile	Use correct DODGE belt
	Low belt tension	Adjust to recommended value
Tensile Break	Shock load	Use higher capacity drive
	Subminimal spkt. dia.	Redesign with larger spkts.
	Debris in drive	Install adequate drive guard
	Improper belt handling, storage	Do not crimp belt or subject it to sharp bends

Problem	Cause	Remedy
Belt Cracking	Subminimal spkt. dia.	Redesign with larger spkts.
	Backside idler	Install inside idler
	Start-up temp below 180 degrees F	Preheat drive before start-up
	Extended exposure to harsh chemicals	Protect drive
Bearing Failure	Excessive belt tension	Adjust to recommended value
	Drive misalignment	Re-adjust alignment
	Subminimal spkt. dia.	Redesign with larger spkts.
Vibration	Wrong belt profile	Install correct DODGE belt
	Hi or Low belt tension	Adjust to recommended value
	Loose key or bushing	Install per instructions
	Loose mounting structure	Reinforce or tighten
Belt not Tracking	Misalignment	Re-adjust alignment
	Long center distance	Carefully adjust alignment
	Mtg. structure bending	Reinforce mounting structure